TM 267
1st printing

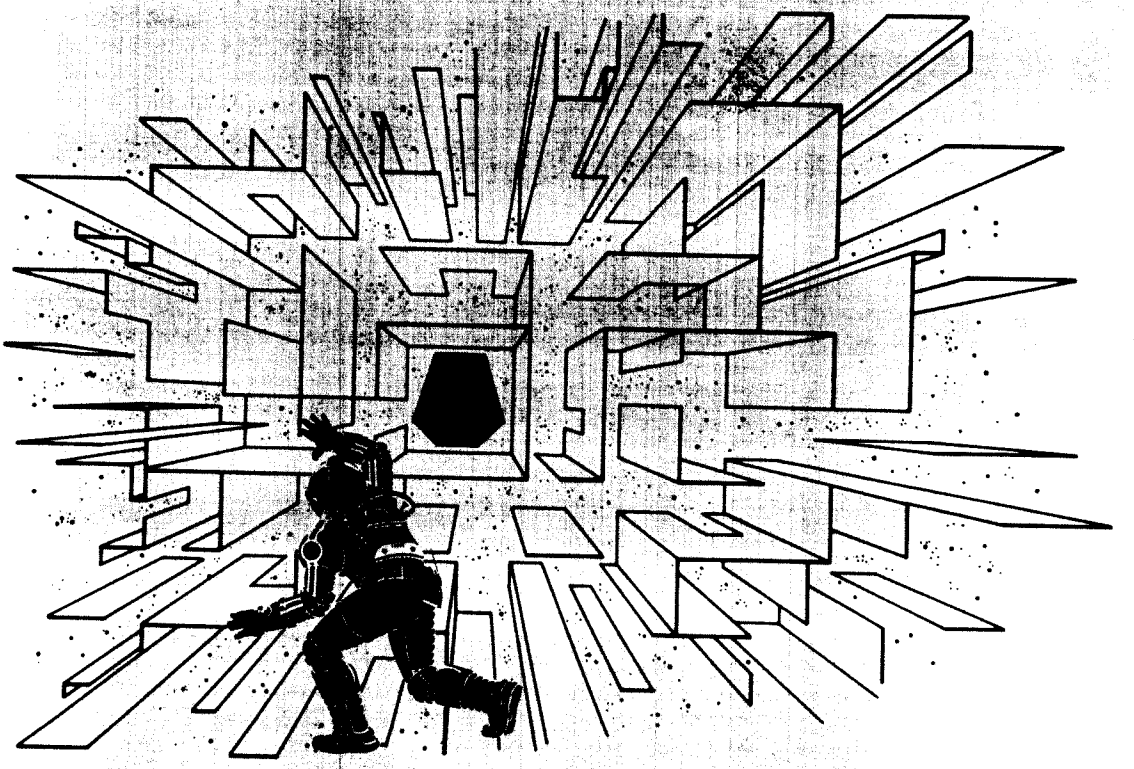

The Adventures of

MAJOR HAVOC™

Conversion Instructions for Tempest™

ATARI®
A Warner Communications Company

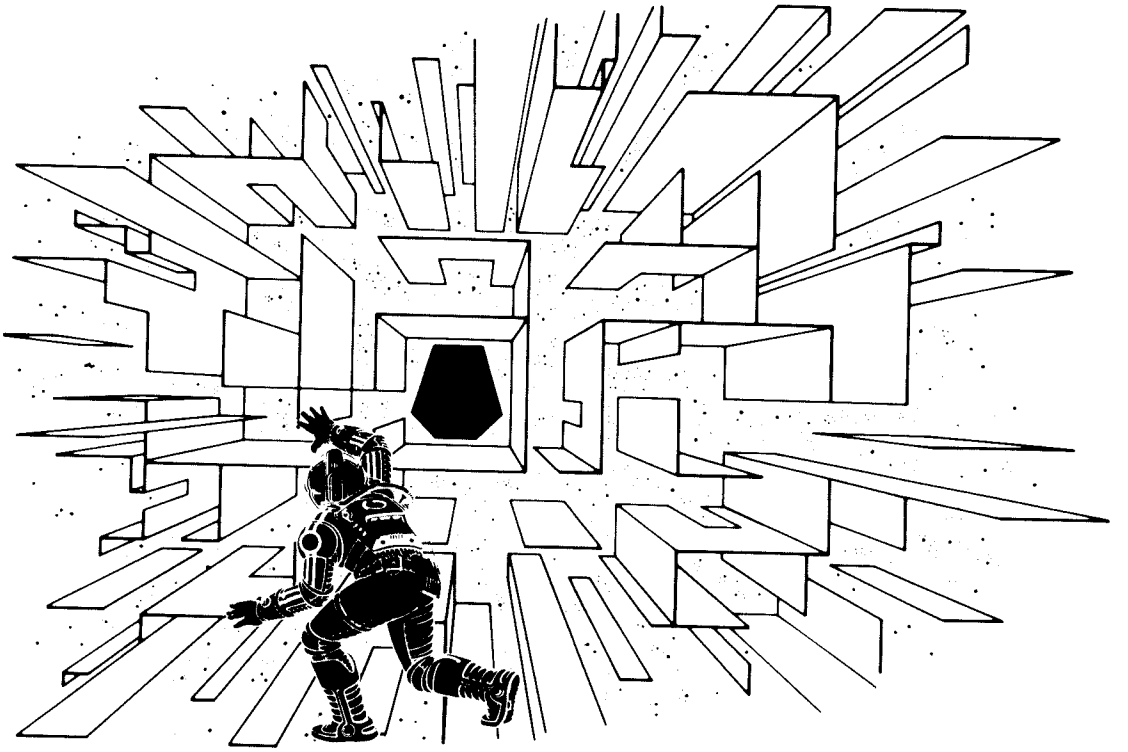

The Adventures of

MAJOR HAVOC™

Conversion Instructions for Tempest™

TABLE OF CONTENTS

Introduction. 1
Kit Parts Inventory 1
Tools Required. 3

Assembly Removal Instructions 4
A. Remove the Attraction Panel 4
B. Remove the Control Panel. 6
C. Remove the Display. 8
D. Remove the Printed-Circuit Boards 11
E. Remove the Power Supply 11

Assembly Modification Instructions. 13
F. Modify the Slam Switch. 13
G. Modify the Power Supply 15
H. Modify the Display. 17
I. Modify the Control Panel. 23
J. Modify the Attraction Panel 25
K. Modify the Display-Mounting Frame 25
L. Modify the Rear Access Panel. 27

Assembly Installation Instructions. 29
M. Install the Side-Panel Decals (optional). 29
N. Install the Attraction Panel. 30
O. Install the Display 31
P. Install the Control Panel 31
Q. Install the Major Havoc Printed-Circuit Boards. 33
R. Install the Power Supply. 35
S. Install the Fan 35
T. Install the Self-Test Chart 36
U. Install the Labels. 36
V. Inspect the Major Havoc Game. 36
W. Adjust the Display. 38
X. Set the Option Switches 40
Y. Update the Game Documentation 40

LIST OF ILLUSTRATIONS

Figure 1 Removing and Installing the Attraction Panel 5
Figure 2 Removing, Modifying, and Installing the Control Panel. . 7
Figure 3 Removing the Display 10
Figure 4 Removing the Printed-Circuit Boards. 12

Figure 5 Modifying the Slam Switch. 14
Figure 6 Modifying the Power Supply 16
Figure 7 1N754A and 1N756A Zener Diode Connections. 17
Figure 8 Modifying the Deflection PCB 19

Figure 9 Modifying the Display-Mounting Frame 26
Figure 10 Modifying the Rear Access Panel, Installing the Fan. . . 28
Figure 11 Installing the Display 32
Figure 12 Installing the Major Havoc Printed-Circuit Boards. . . . 34

Figure 13 Installing the Labels. 37
Figure 14 Adjusting the Display. 39
Figure 15 Input Protection Circuit Schematic 41
Figure 16 Deflection PCB Schematic (Versions 1, 2, and 3). 42
Figure 17 Deflection PCB Schematic (Version 4) 43

LIST OF TABLES

Table 1 Kit Parts 1
Table 2 Tools Required. 3
Table 3 Display Versions. 20

INTRODUCTION

This document includes the instructions necessary for changing your upright Tempest® game into a Major Havoc™ game. The instructions include: (1) modifying the power supply, display, control panel, attraction panel, display-mounting frame, rear access panel, and slam switch; and (2) installing a fan, decals, and Major Havoc game printed-circuit boards (PCBs). The procedures are organized to accomplish the change in the most efficient manner.

A Major Havoc instruction manual and schematic package is included with the kit. Keep your Tempest instruction manual and schematic package for information pertaining to those parts of the Tempest game that are not modified by this Major Havoc conversion.

NOTE

Do not discard this document after the conversion is completed. Keep this document as a supplement to the Major Havoc operators manual and display manual.

KIT PARTS INVENTORY

The parts listed in Table 1 are included or are available as options to the Major Havoc Conversion Kit.

Table 1 Kit Parts
A042443-01

Part No.	Quantity	Description
A034629-01	1	AC Harness
A038088-01	Optional	Input Protection Circuit PCB Assembly
A040547-03	1	Fan and Bracket Assembly
A041347-21	1	Major Havoc PCB Assembly
A042392-01	1	Major Havoc Conversion PCB Assembly
A042445-01		X-Y Display Kit--includes
31-1N4002	4	Type-1N4002 Diode
32-1N756A	2	8.2 V, Type-1N756A, Zener Diode
110000-303	1	30 kΩ, ±5%, 1/4 W, Resistor
131002-001	2	6.8 V, Type-1N754A, Zener Diode
A042448-01	1	Fan Harness Assembly

Table 1 Kit Parts, continued
A042443-01

Part No.	Quantity	Description
72-1124S	4	#10-24 x 1-1/2-Inch Cross-Recessed, Pan-Head Machine Screw
75-040S	4	#10 Split-Lock Washer
75-9910N0	4	5/8-Inch Stamped Nut
75-99511	2	#10-24 Nut/Washer Assembly
78-24012	4	Beaded Nylon Tie
72-HA4804S	1	#8-32 x 1/4-Inch, Cross-Recessed, Pan-Head Screw
042447-01	1	Control-Panel Decal
034536-02	1	1/2-Inch Foam Pad
034536-03	1	1-1/8-Inch Foam Pad
037713-01	1	Attraction-Panel Glass
042413-01	1	Label Kit--includes
038158-01	1	Conversion Kit Label (Non-UL)
039450-01	1	FCC Compliance Label
042421-01	Optional	Left Side-Panel Decal
042421-02	Optional	Right Side-Panel Decal
042307-01	1	Display-Rotate Template
042444-01	1	Bezel
042446-01	1	Attraction-Panel Decal
042449-01	1	Fan Mounting Block
042450-01	1	PCB Mounting Bracket
160013-001	2	Leaf Switch with Button Holder
175007-001	8	#10 Flat Fender Washer
176015-110	1	#10 x 5/8-Inch Cross-Recessed, Deep-Thread Pan-Head Screw
176020-220	2	#8 x 1-1/4-Inch Cross-Recessed, LP Washer-Head Screw
177003-040	4	#10-24 T-Nut
178030-004	1	Pushbutton Assembly (Red)
178030-007	1	Pushbutton Assembly (Yellow)
178065-100	2	Tie Wrap
CO-252-04	1	Supplement to TM-267
SP-252	1	Major Havoc Schematic Package
ST-252-01	1	Major Havoc Label with Self-Test Procedure and Option Switch Settings
TM-252	1	Major Havoc Operators Manual
TM-267	1	Major Havoc Conversion Instructions for Tempest

TOOLS REQUIRED

The tools listed in Table 2 are required to perform a complete conversion.

Table 2 Tools Required

Description	Purpose
#2 Phillips Screwdriver	Removing the attraction panel and power supply
	Modifying the power supply
	Installing the attraction panel, display, power supply, and fan
5/64-Inch Allen Wrench	Modifying the control panel
1/8-Inch Allen Wrench	Removing the display
1/4-Inch Hex Driver	Removing the display
3/8-Inch Hex Driver	Modifying the control panel
11/32-Inch Hex Driver	Removing the power supply
	Modifying the power supply
7/16-Inch Hex Driver	Removing the control panel and display
	Installing the control panel
5/8-Inch Open-End Wrench	Modifying the control panel
Sabre Saw	Modifying the display-mounting frame and rear access panel
15-27 W Soldering Iron	Modifying the display
Electric Hand Drill	Modifying the display-mounting frame and rear access panel
1/4-Inch Drill Bit	Modifying the display-mounting frame and rear access panel
#11 X-ACTO Knife (optional)	Installing the side panel decals
Heat Gun or Hair Drier	Removing the control-panel decal

ASSEMBLY REMOVAL INSTRUCTIONS

WARNING

To avoid electrical shock, unplug the game before performing the conversion procedures.

NOTE

These procedures must be performed by qualified service personnel. All interior and exterior surfaces of the cabinet and the working area should be clean and free of foreign material before starting the procedures.

The following procedures are arranged in the sequence recommended for performing the game conversion. The parts of your game that are affected by the conversion are removed, modified, and the new Major Havoc parts are installed.

A. REMOVE THE ATTRACTION PANEL

Perform the following procedure to remove the attraction panel from the game cabinet (see Figure 1).

1. From the rear of the cabinet, use a Phillips screwdriver to remove the four wood screws securing the fluorescent light and speaker assembly to the cabinet.
2. Slide the fluorescent light and speaker assembly partially out the back of the cabinet.
3. Disconnect the fluorescent light and speaker assembly harness connector.
4. Remove the fluorescent light and speaker assembly from the cabinet.
5. From inside the housing area for the fluorescent light and speaker assembly, use a Phillips screwdriver to remove the four wood screws securing the attraction panel to the cabinet.
6. Remove the attraction panel.

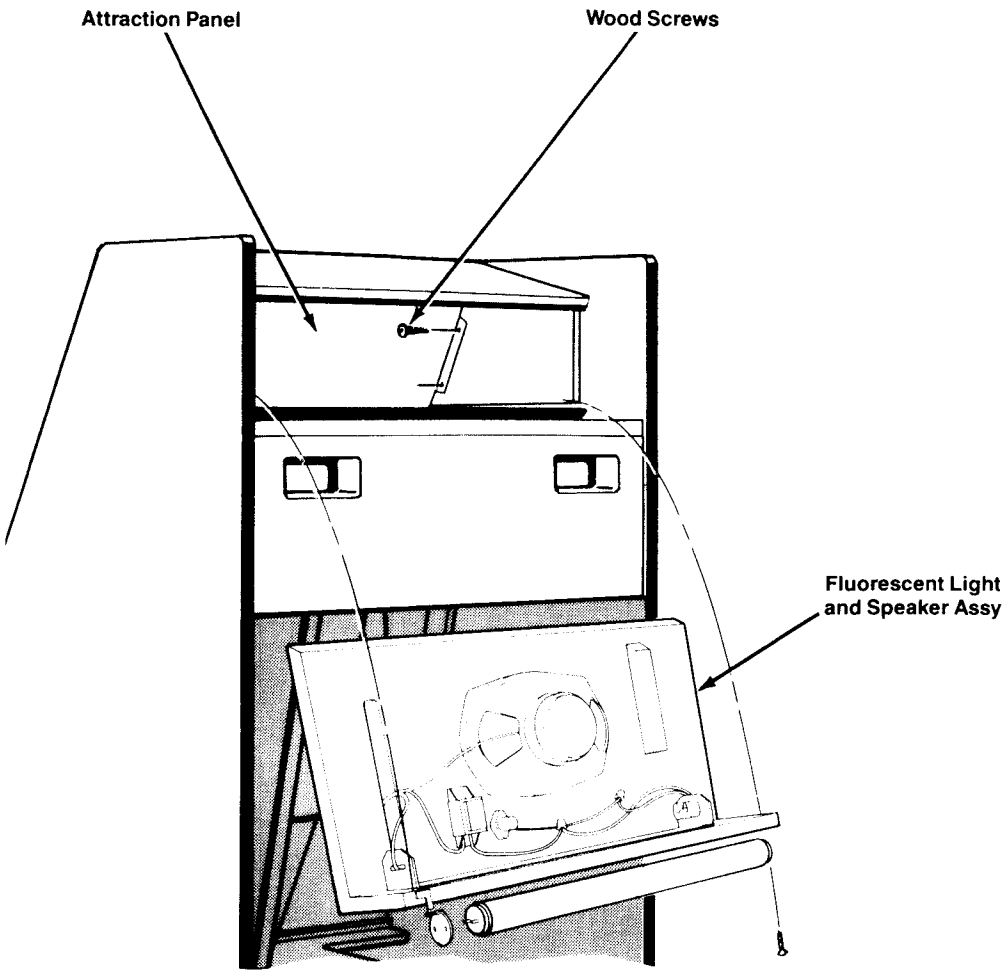

Figure 1 Removing and Installing the Attraction Panel

B. REMOVE THE CONTROL PANEL

Perform the following procedure to remove the control panel from the game cabinet (see Figure 2).

1. Unlock and open the coin door.

2. Reach up through the coin-door opening and release the spring-draw latches on each end of the control panel.

3. Disconnect the control-panel harness connector from the game harness.

4. Use a 7/16-inch hex wrench to remove the three nuts and washers securing the control panel to the cabinet (save the mounting hardware for reuse).

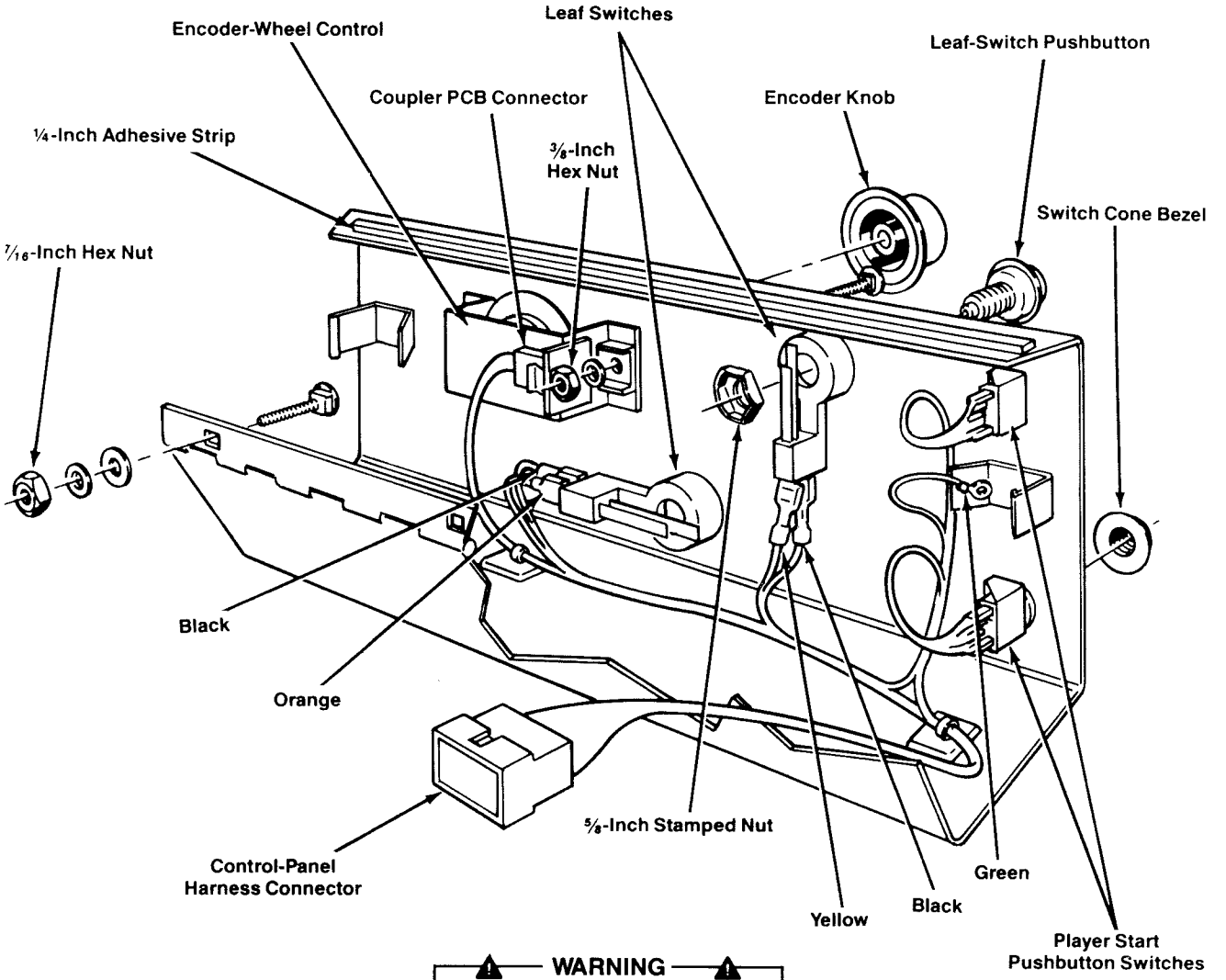

WARNING

Players may receive an electrical shock if the control panel is not properly grounded. After modifying the control panel, make certain the green ground wire is firmly attached to the metal latch tab.

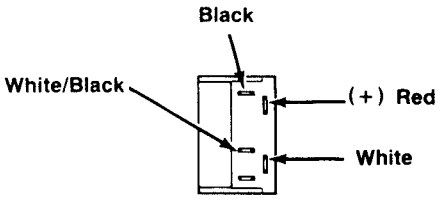

1-Player Start

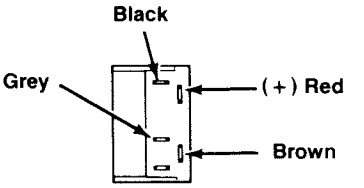

2-Player Start

Figure 2 Removing, Modifying, and Installing the Control Panel

C. REMOVE THE DISPLAY

Perform the following procedure to remove the display from the game cabinet (see Figure 3).

WARNING

Shock Hazard

High voltages may exist in the display circuitry, even with power disconnected. Use extreme caution. Do not touch the display circuitry with your hands or with metal tools.

Implosion Hazard

Use extreme caution when handling the display. If you drop the display and the cathode-ray tube breaks, it may implode! Shattered glass can fly six feet or more from the implosion. To avoid injury, we recommend that two people, wearing gloves and safety glasses, perform the following removal procedures.

1. Use a 1/8-inch Allen wrench to remove the three screws securing the retainer to the top of the display shield.

2. Remove the retainer and grille from the top of the display shield.

3. Carefully remove the tempered-glass display shield by firmly grasping the bottom of the shield and lifting up.

4. Remove the staples securing the cardboard display bezel to the cabinet and remove the bezel.

5. Remove the rear access panel from the cabinet.

6. Discharge the high voltage from the cathode-ray tube (CRT) before proceeding:

   a. Attach one end of a large, well-insulated, 18-gauge jumper wire to ground.

   b. Momentarily touch the free end of the grounded jumper to the CRT anode by carefully sliding the jumper under the anode cap.

   c. Wait two minutes and repeat step 6b.

7. From the back of the cabinet, disconnect the 15-pin Molex connector from the display.

8. Use a 7/16-inch hex driver to remove the display support bracket from the display chassis.

9. From the front of the cabinet, use a 3/8-inch hex driver to remove the four nuts and flat washers securing the display to the display-mounting frame. Do not remove the upper two bolts from the display-mounting frame.

10. Carefully pull the display chassis out through the front of the cabinet.

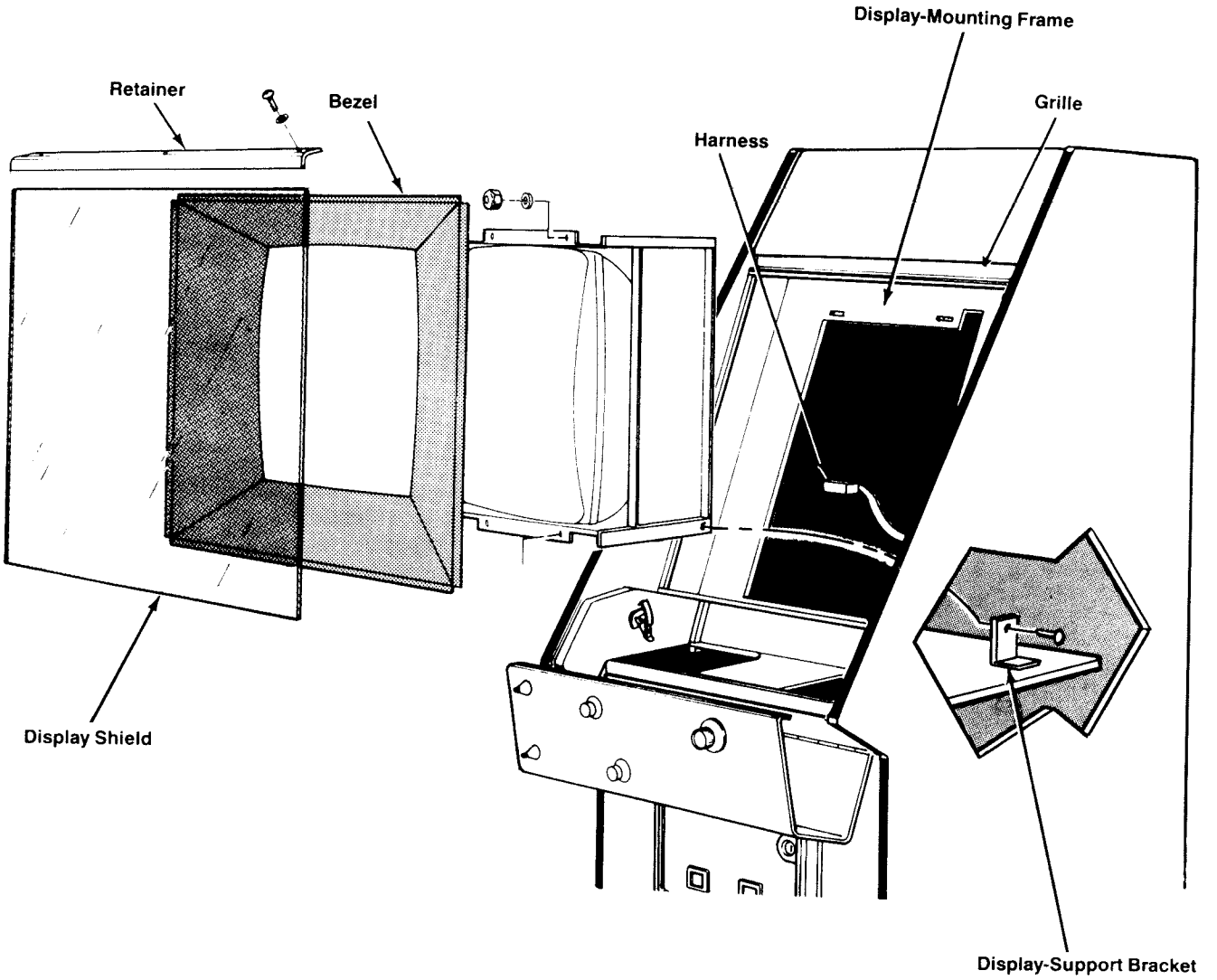

Figure 3 Removing the Display

D. REMOVE THE PRINTED-CIRCUIT BOARDS

Perform the following procedure to remove the Tempest game PCBs from the game cabinet (see Figure 4).

1. Disconnect the game harness edge connectors from the two game PCBs. If the edge connectors are secured with screws or tie wraps, remove the screws or tie wraps before disconnecting the edge connectors from the PCBs.

2. Use a Phillips screwdriver to remove the screw, washer, and two spacers securing the top right corner of the PCBs to the cabinet wall.

3. Carefully slide the PCBs straight out of their slots.

E. REMOVE THE POWER SUPPLY

Perform the following procedure to remove the power supply from the game cabinet.

1. Disconnect the four harness connectors (J1, J2, J4A, and J5).

2. Disconnect the power cord from the power supply.

3. Use a 11/32-inch hex driver to remove the nut and star washer from the ground screw attaching the green grounding wires to the power supply.

4. Cut the cable tie located on the rear right corner of the power supply chassis.

5. Use a Phillips screwdriver to remove the four screws securing the power supply to the cabinet.

6. Remove the power supply from the cabinet. Be careful not to damage the Regulator/Audio II PCB located above the power supply.

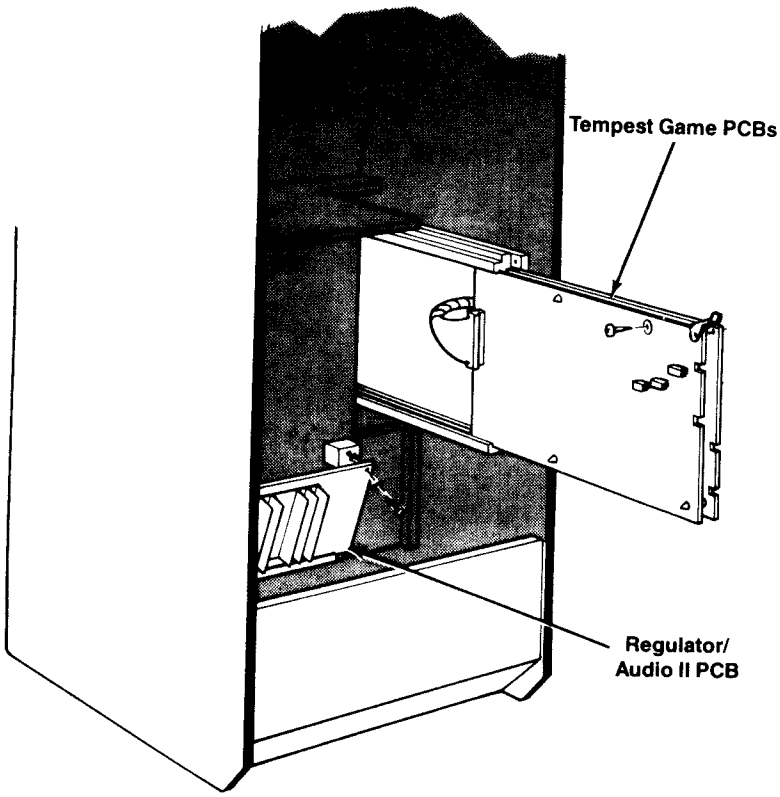

Figure 4 Removing the Printed-Circuit Boards

ASSEMBLY MODIFICATION INSTRUCTIONS

The following procedures describe the modifications required for this conversion. Provide a clean work surface on which to perform the modifications to the assemblies removed from the game cabinet.

F. MODIFY THE SLAM SWITCH

In the Tempest game, the slam switch is used to cancel credits if the game is being jarred or tipped. In the Major Havoc game, the slam switch is used as a diagnostic step selector and auxiliary coin switch. Consequently, the slam switch must be modified to prevent free credits from being obtained if the game is jarred or tipped.

Perform the following procedure to modify the slam switch (see Figure 5).

1. Open the coin door.

2. Locate the slam switch in the upper left corner of the coin door.

3. US-Made Coin Door. Gently bend the stationary leaf contact out approximately 1/2-inch so that the switch will not close when the game cabinet is tipped or jarred.

   British-Made Coin Door. Cut the weighted end off the microswitch pendulum so that the switch will not close when the game cabinet is tipped or jarred.

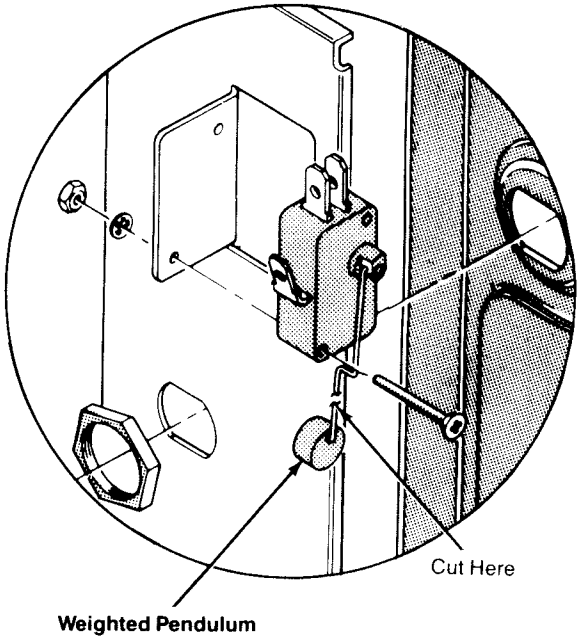

British-Made Coin Door

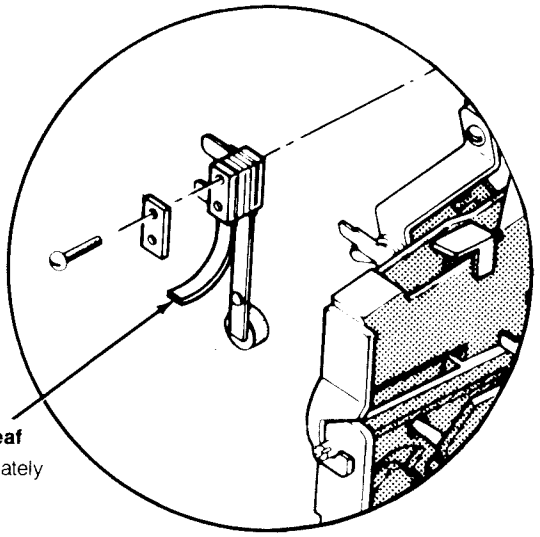

US-Made Coin Door

Figure 5 Modifying the Slam Switch

G. MODIFY THE POWER SUPPLY

Perform the following procedure to modify the power supply to provide a parallel 110-volt AC circuit to power the fan (see Figure 6).

1. Set the power supply upside down on a clean work surface.

2. Install the three-pin AC harness connector with the white wire on the left end of the connector.

3. Connect the white wire from AC harness connector J4B to the terminal lug adjacent to the white wire from connector J4A.

4. Connect the black wire from AC harness connector J4B to the terminal lug adjacent to the black wire from connector J4A.

5. Use a 11/32-inch hex driver to remove the nut and star washer from the ground screw securing the green wires and the line filter to the power supply. Remove the ground screw.

6. Attach the green wire from connectors J4A and J4B and the green wire from connector J2 to the ground screw.

7. Insert the ground screw, with the green wires attached, through the line filter bracket and power-supply chassis.

8. Use a 11/32-inch hex driver and a Phillips screwdriver to secure the nut and star washer, removed in step 5, to the power supply.

9. Check that the power supply fuses match the ratings given on the labels located near the fuse block and the cartridge fuse holder.

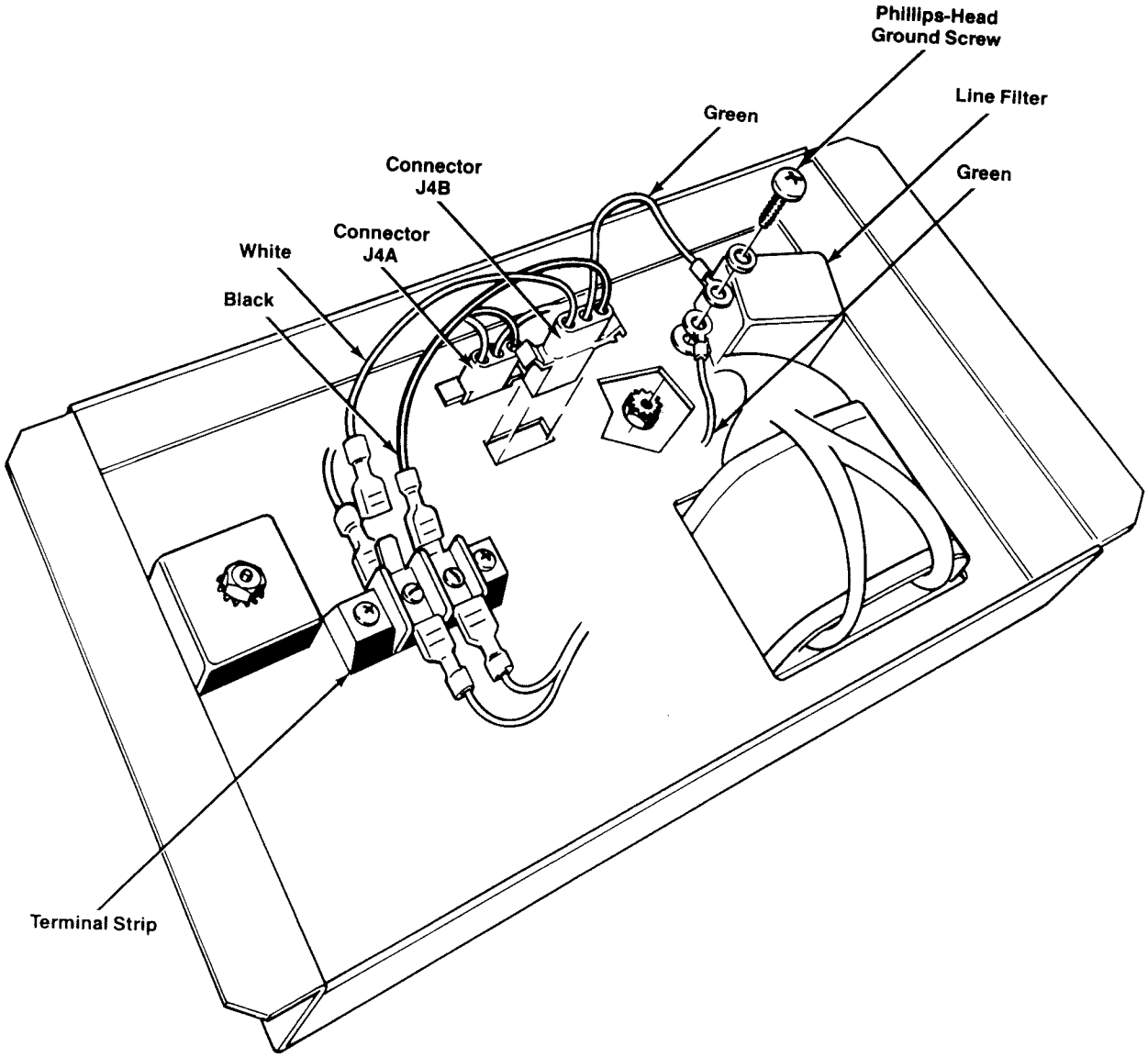

Figure 6 Modifying the Power Supply

H. MODIFY THE DISPLAY

There are four versions of the Wells-Gardner display used in the Tempest game. Perform the preliminary procedure for all versions of the display, then refer to Table 3 to determine which version of the four displays was installed in your Tempest game and perform the additional procedure for that version.

CAUTION

When soldering components to the display circuitry, apply just enough heat to provide a proper electrical connection. Excessive heat can damage the semiconductor material.

Preliminary Procedure

Perform the following procedure to modify the Deflection PCB (see Figures 7 and 8).

1. Set the display on a clean work surface.
2. Disconnect the 15-pin Molex connector from the mounting bracket on the display chassis and the harness connectors from the Deflection PCB and the Neck PCB.
3. Use a 1/4-inch hex driver to remove the two screws securing the Deflection PCB to the display chassis.
4. Remove the Deflection PCB from the display.
5. Connect two type-1N754A Zener diodes together, anode to anode, as shown in Figure 7. Use a soldering iron to solder the two anode leads together.

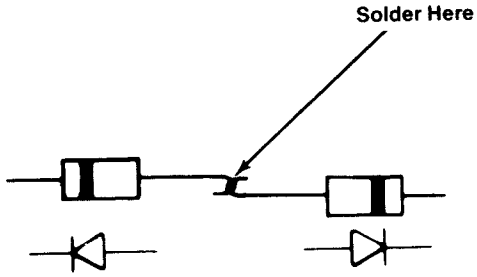

Figure 7 1N754A and 1N756A Zener Diode Connections

6. Connect two type-1N756A Zener diodes together and solder as described in step 5.

7. Examine the soldered side of the Deflection PCB removed from the display and determine which of the two PCBs shown in Figure 8 matches your PCB. Bottom

8. On the component side of the Deflection PCB, locate the yellow wire (top right side of the PCB).

9. Solder one cathode lead of the two type-1N754A Zener diodes (soldered together in step 5) to the yellow lead on the soldered side of the PCB as shown on the appropriate illustration in Figure 8.

10. Solder the other cathode lead of the two type-1N754A Zener diodes to ground as shown on the appropriate illustration in Figure 8.

11. On the component side of the Deflection PCB, locate the orange wire (near top center of the PCB).

12. Solder one cathode lead of the two type-1N756A Zener diodes (soldered together in step 6) to the orange lead on the soldered side of the PCB as shown on the appropriate illustration in Figure 8.

13. Solder the other cathode lead of the two type-1N756A Zener diodes to ground as shown on the appropriate illustration in Figure 8.

14. On the component side of the Deflection PCB, locate connector P600 (right center of the PCB).

15. Solder the cathode lead of a type-1N4002 diode to pin 1 and the anode lead to pin 4 of connector P600 on the soldered side of the PCB as shown on the appropriate illustration in Figure 8.

16. Solder the cathode lead of a type-1N4002 diode to pin 5 and the anode lead to pin 7 of connector P600 on the soldered side of the PCB as shown on the appropriate illustration in Figure 8.

17. On the component side of the Deflection PCB, locate connector P700 (left center of the PCB).

18. Solder the cathode lead of a type-1N4002 diode to pin 1 and the anode lead to pin 4 of connector P700 on the soldered side of the PCB as shown on the appropriate illustration in Figure 8.

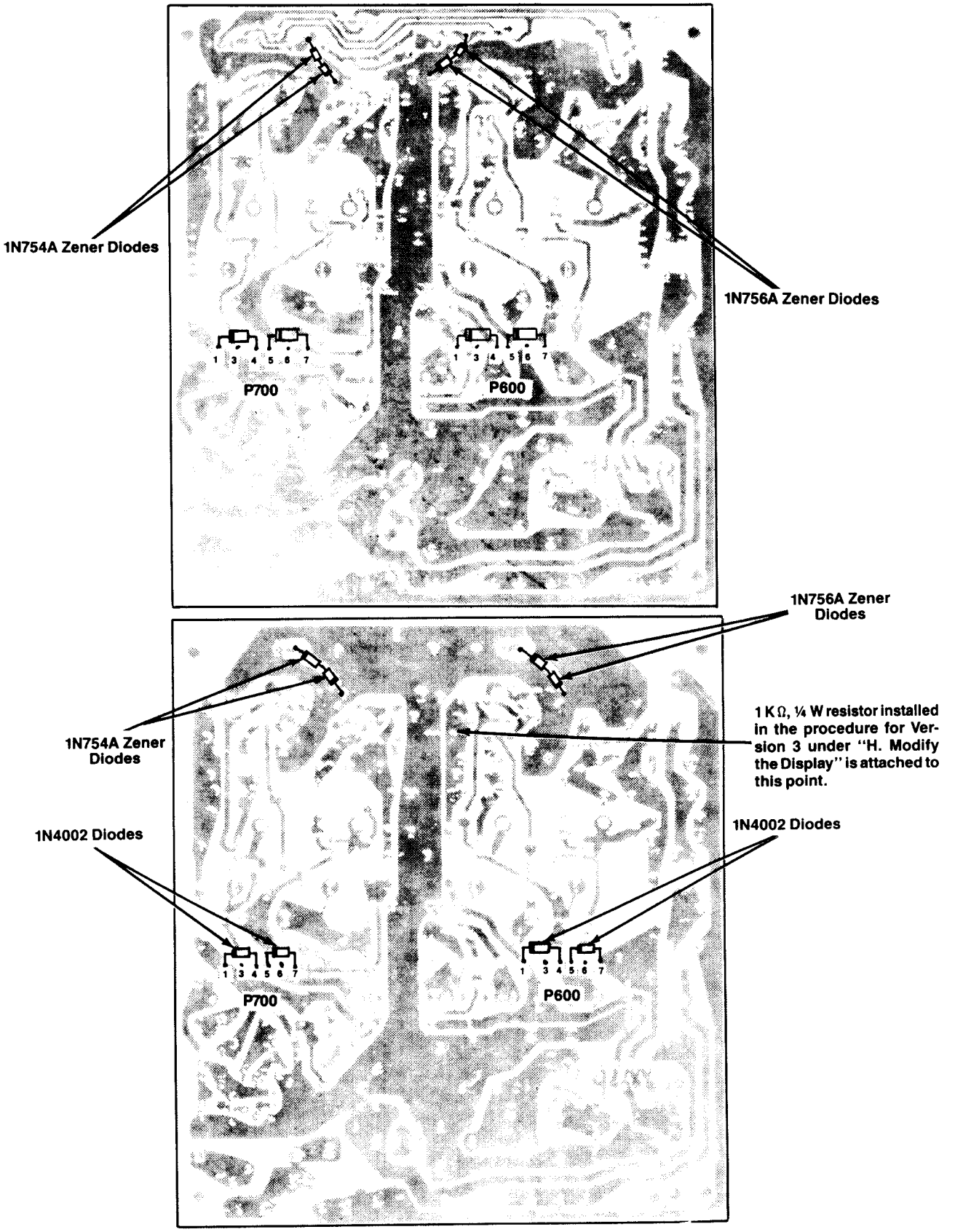

Figure 8 Modifying the Deflection PCB

19. Solder the cathode lead of a type-1N4002 diode to pin 5 and the anode lead to pin 7 of connector P700 on the soldered side of the PCB as shown on the appropriate illustration in Figure 8.

20. Refer to Table 3 to determine which of the four versions of the display has been installed in your Tempest game.

Table 3 Display Versions

Determine	Procedure
Deflection PCB has two large, black, tubular capacitors, C804 and C805, (below top center of PCB) installed.	Version 1
Input Protection Circuit PCB is installed (piggyback) with a 1 kΩ,±5%, 1/4 W resistor connected between the Input Protection Circuit PCB and the Deflection PCB.	Version 2
Input Protection Circuit PCB is installed (piggyback) but does not have a resistor between the Input Protection Circuit PCB and the Deflection PCB.	Version 3
Deflection PCB does not have capacitors C804 and C805 (below top center of PCB) or a Input Protection Circuit PCB installed.	Version 4

21. Perform the procedure as follows for the appropriate version of the display determined from Table 3. (Refer to the display manual, TM-183, for component and connector locations.)

NOTE

The 30 kΩ, 1/4 W resistor supplied in the kit is used only for Version 1 of the display.

Version 1

Perform the following procedure for Version 1 of the display.

1. Verify that the Preliminary Procedure has been performed.
2. Use a soldering iron to remove resistor R811 and replace it with the 30 kΩ, 1/4 W resistor supplied in the kit.
3. Use a 1/4-inch hex driver to secure the modified Deflection PCB to the display chassis.

CAUTION

Make certain that the harness from Q705 and Q706 is connected to P700 and not P100.

4. Connect the harnesses to the appropriate Deflection PCB connectors.

Version 2

Perform the following procedure for Version 2 of the display.

1. Verify that the Preliminary Procedure has been performed.
2. Use a 1/4-inch hex driver to secure the modified Deflection PCB to the display chassis.

CAUTION

Make certain that the harness from Q705 and Q706 is connected to P700 and not P100.

3. Connect the harnesses to the appropriate Deflection PCB connectors.

Version 3

Perform the following procedure for Version 3 of the display.

1. Verify that the Preliminary Procedure has been performed.
2. Locate the wire connected to resistor R1 (22 kΩ) and the collectors of transistors Q1 and Q3 (type 2N3904) on the Input Protection Circuit PCB and the point shown in Figure 8 on the Deflection PCB.
3. Use a wire cutter to cut the wire, located in step 2, half-way between the two PCBs.
4. Use a soldering iron to solder a 1 kΩ, ±5%, 1/4 W resistor (not included in the kit) between the two ends of the wire cut in step 3.
5. Use a 1/4-inch hex driver to secure the modified Deflection PCB to the display chassis.

CAUTION

Make certain that the harness from Q705 and Q706 is connected to P700 and not P100.

6. Connect the harnesses to the appropriate Deflection PCB connectors.

Version 4

Perform the following procedure for Version 4 of the display.

NOTE

This version of the display requires that an Input Protection Circuit PCB assembly be installed on the Deflection PCB as part of the display modification procedure. This PCB assembly is not included in the kit. Contact your nearest distributor for availability. Use the order form at the back of this document. Refer to Table 1 for the appropriate part number.

1. Verify that the Preliminary Procedure has been performed.

2. Install the Input Protection Circuit PCB to the Deflection PCB as described in the instructions supplied with the Input Protection Circuit PCB assembly.

3. Use a 1/4-inch hex driver to secure the modified Deflection PCB to the display chassis.

> **CAUTION**
>
> Make certain that the harness from Q705 and Q706 is connected to P700 and not P100.

4. Connect the harnesses to the appropriate Deflection PCB connectors.

I. MODIFY THE CONTROL PANEL

> **CAUTION**
>
> The following procedure should be performed on a clean work surface to prevent contaminating the exposed adhesive surface of the control panel.

Perform the following procedure to modify the control panel (see Figure 2).

1. Remove the two LED player-start pushbutton switches from the control panel by holding the switch-cone bezel and rotating the switches counterclockwise.

2. Disconnect the harness wire fast-on lugs from the player-start and pushbutton leaf switches.

3. Disconnect the connector from the encoder-wheel Coupler PCB.

4. Use a 5/8-inch open-end wrench to remove the stamped nuts securing the two pushbutton leaf switches to the control panel.

5. Use a 5/64-inch Allen wrench to remove the knob from the encoder-wheel control.

6. Use a 3/8-inch hex driver to remove the two nuts securing the encoder-wheel control to the control panel.

7. Directly heat the control-panel decal, not the metal, with a heat gun or hair drier. Do not melt the decal. (The decal can be removed without heating, but it is more difficult.)

8. Grasp the corners of the control-panel decal and, while applying heat, peel the decal off.

NOTE

If you were able to remove the decal evenly without contaminating the adhesive surface and you are confident that you can properly position the Major Havoc decal on the control panel in one application, proceed to step 10.

9. Use a lint-free cloth wetted with isopropyl alcohol to remove the residual adhesive from the control panel. Do not use paper towels. Repeat the cleaning operation (at least four applications) to make certain all the adhesive is removed.

10. Cut and remove a strip of the protective backing from the switch holes near the center of the decal.

11. Carefully position the Major Havoc control-panel decal so that the holes in the Major Havoc decal are aligned with the holes in the control panel. Then press the center of the decal onto the control panel.

12. Remove the protective backing from one end of the decal and use the palm of your hand to rub the decal from the center toward the end of the control panel. Repeat for the opposite end of the decal.

13. Use a 3/8-inch hex driver to secure the encoder-wheel control to the control panel with the two nuts removed previously.

14. Use a 5/8-inch open-end wrench to secure the two new leaf switches and pushbuttons to the control panel. (The red pushbutton goes in the FIRE hole; the yellow pushbutton goes in the SHIELD hole.)

15. Connect the harness fast-on lugs and connector to the switches and encoder-wheel Coupler PCB.

16. Install a 24-inch strip of 1/4-inch adhesive-backed foam tape (not included in the kit) to the top edge of the control panel.

J. MODIFY THE ATTRACTION PANEL

Perform the following procedure to modify the attraction panel.

1. Remove the staples securing the attraction panel to the frame.
2. Grasp each corner of the attraction-panel decal and peel the attraction-panel decal from the frame. Keep the speaker grille and discard the Tempest decal and attraction-panel glass.
3. Lay the attraction-panel frame on a clean work surface.
4. Set the new attraction-panel glass and the speaker grille (with the original side up) into the appropriate recesses in the attraction-panel frame.
5. Position the Major Havoc attraction-panel decal on the attraction-panel frame so that the grille slots in the decal are properly aligned with the grille. Use the impression of the original decal slots on the grille as a guide.
6. Use the palm of your hand to rub the decal onto the attraction-panel glass, grille, and frame from the center toward each end.

K. MODIFY THE DISPLAY-MOUNTING FRAME

Perform the following procedure to modify the display-mounting frame (see Figure 9).

1. From the front of the cabinet, place the display-rotate template onto the top two display-mounting bolts in the display-mounting frame. Center the template on the display-mounting frame.
2. Use a dark marking pen to mark the display-mounting frame through the holes of the template. Then trace along the edges of the template.
3. Use an electric hand drill with a 1/4-inch bit to drill out the holes marked in step 2.
4. Use a sabre saw to cut the wood from the display-mounting frame by following the lines marked from the template.

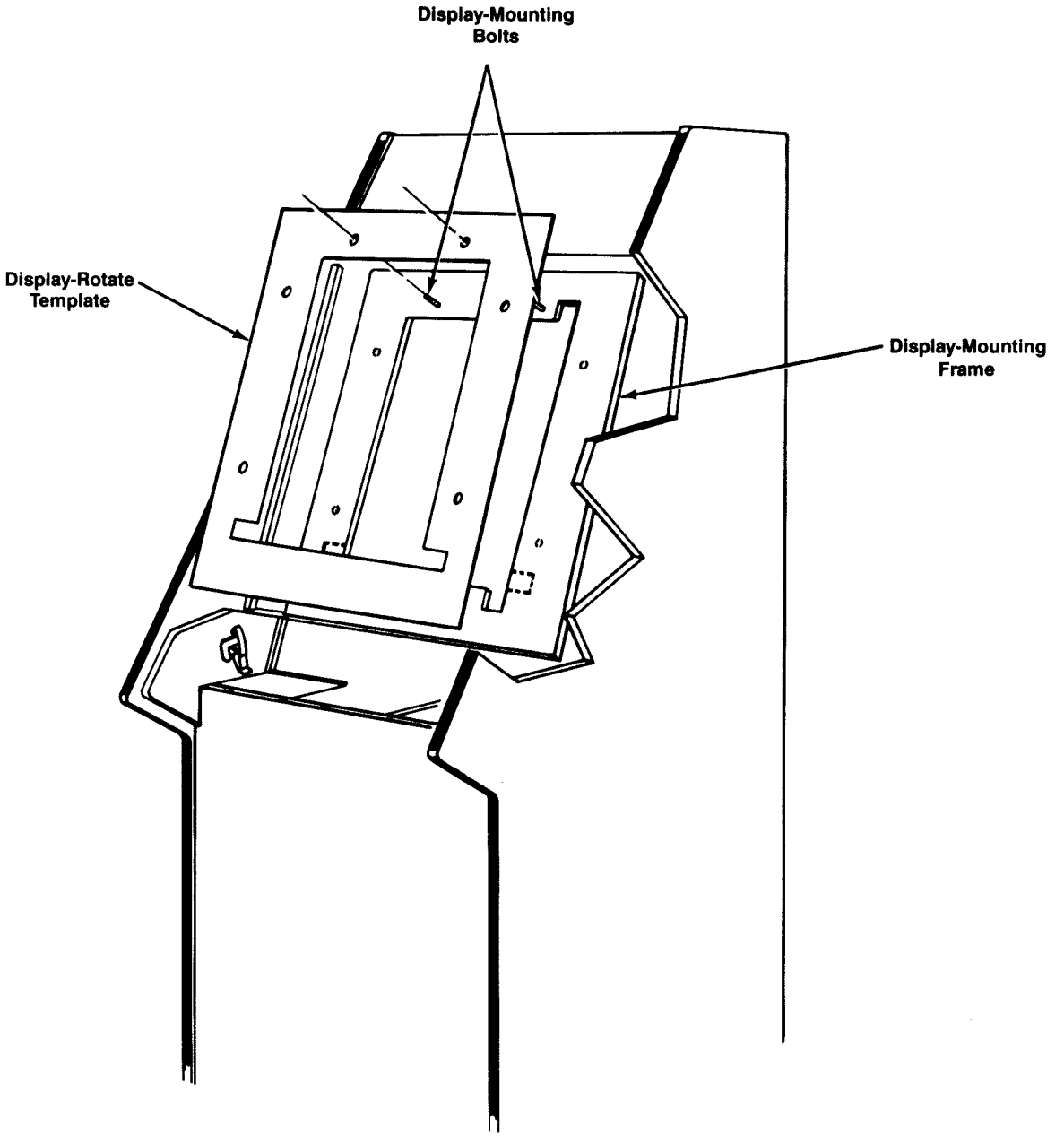

Figure 9 Modifying the Display-Mounting Frame

L. MODIFY THE REAR ACCESS PANEL

Perform the following procedure to modify the rear access panel to provide a fan intake opening (see Figure 10).

1. Measure and mark the rear access panel for the fan intake opening as shown in Figure 10.
2. Use an electric hand drill with a 1/4-inch bit to drill holes in the rear access panel at each corner of the marked fan intake opening.
3. Use a sabre saw to cut the wood from the fan intake opening.

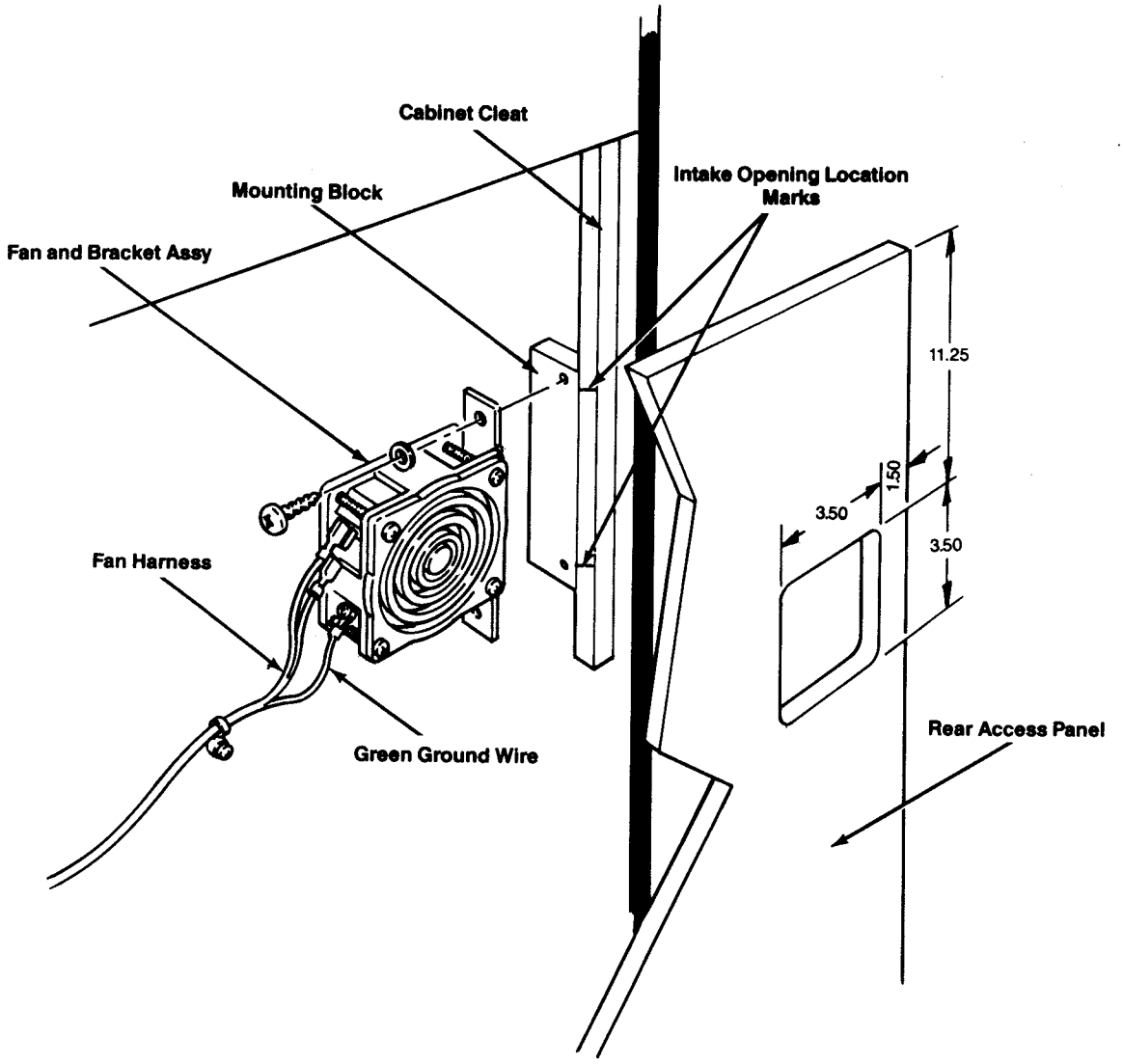

Figure 10 Modifying the Rear Access Panel and Installing the Fan

ASSEMBLY INSTALLATION INSTRUCTIONS

The following procedures describe the installation of the Major Havoc assemblies.

M. INSTALL THE SIDE-PANEL DECALS (OPTIONAL)

> **NOTE**
>
> The Major Havoc side-panel decals are not included in the kit. However, if you wish to purchase these decals, use the order form provided at the back of this document. Refer to Table 1 for the appropriate part numbers.

Perform the following procedure to install the Major Havoc side-panel decals on the game cabinet.

1. Mix a normal solution of any liquid dishwashing detergent and approximately three quarts of water in a bucket.

2. Clean all oil film and dust from the sides of the cabinet and fill any dents or gouges with a filler material.

> **NOTE**
>
> We recommend that the following procedure be performed by two persons. One person may have difficulty handling the cabinet and the large decals.

3. Tip the game cabinet and gently lay one side on a blanket.

4. Use a sponge to liberally apply the water and detergent solution over the entire side of the cabinet.

5. Grasp the top edge of the appropriate decal for the side of the cabinet. Hold the decal up and off of the floor and peel away the protective backing.

6. Gently lay the decal, sticky side down, in the center of the wet surface of the cabinet. Position the decal to ensure that the graphics are centered on the side of the cabinet.

7. After the decal is in position, use the squeegee to remove all the excess water and detergent from beneath the decal by quickly working from the center to the outside edges. HINT: If any air bubbles

form, puncture them with a pin or the tip of an X-ACTO™ blade. Rub gently with a soft cloth to disperse the trapped air.

8. Carefully insert a #11 X-ACTO™ blade (or suitable substitute) between the T-molding and cabinet wall and, following the contour of the cabinet, cut off the excess decal. Rub the cut edges with a cloth to smooth down any rough edges.

9. When the wrinkles are removed and the decal is free of all excess water and detergent, gently turn the game cabinet over to the opposite side. Be careful to avoid damaging the freshly applied decal.

10. Repeat steps 2 through 8 for the remaining decal.

11. Carefully raise the cabinet to the upright position.

12. Use a lint-free cloth to wipe off any excess water and detergent from inside and outside of the cabinet. Allow time to dry before proceeding.

N. INSTALL THE ATTRACTION PANEL

Perform the following procedure to install the Major Havoc attraction panel in the game cabinet (see Figure 1).

1. From the front of the cabinet, install the modified attraction panel into the game.

2. From the rear of the cabinet, use a Phillips screwdriver to secure the attraction panel to the cabinet with the four wood screws removed previously.

3. From the rear of the cabinet, slide the light and speaker board assembly part way into its housing area.

4. Connect the five-pin Molex connector to the light and speaker board harness.

5. Use a Phillips screwdriver to secure the light and speaker board assembly to the cabinet with the four wood screws removed previously.

O. INSTALL THE DISPLAY

WARNING

Use extreme caution when handling the display. If you drop the display and the cathode-ray tube breaks, it may implode! Shattered glass can fly six feet or more from the implosion forces. To avoid injury, we recommend that two people, wearing gloves and safety glasses, perform the following installation procedure.

Perform the following procedure to install the modified display in the game cabinet (see Figure 11).

1. Remove all wood chips and sawdust from the cabinet.
2. From the rear of the cabinet, use a Phillips screwdriver to secure the four screws, washers, and T-nuts through the newly drilled holes in the display-mounting frame as shown in Figure 11.
3. From the rear of the cabinet, use a Phillips screwdriver to tighten the screws until the T-nuts are firmly imbedded in the display-mounting frame as shown in Figure 11.
4. From the front of the cabinet, carefully insert the display, with the chassis on the bottom, into the display-mounting frame and onto the four bolts installed in step 2.
5. Use a 3/8-inch hex driver to secure the display to the display-mounting frame with the washers and nuts supplied in the kit.
6. Connect the 15-pin Molex game connector to the right rear connector on the display chassis.
7. Secure the new display bezel to the cabinet with tape or staples.
8. Install the display shield and the retainer and grille to the cabinet. Use a 1/8-inch Allen wrench to secure the retainer to the cabinet with the three screws and washers removed previously.

P. INSTALL THE CONTROL PANEL

Perform the following procedure to install the Major Havoc control panel in the game cabinet (see Figure 2).

1. Use a 7/16-inch hex driver to secure the control panel to the cabinet with the three bolts, washers, and nuts removed previously.

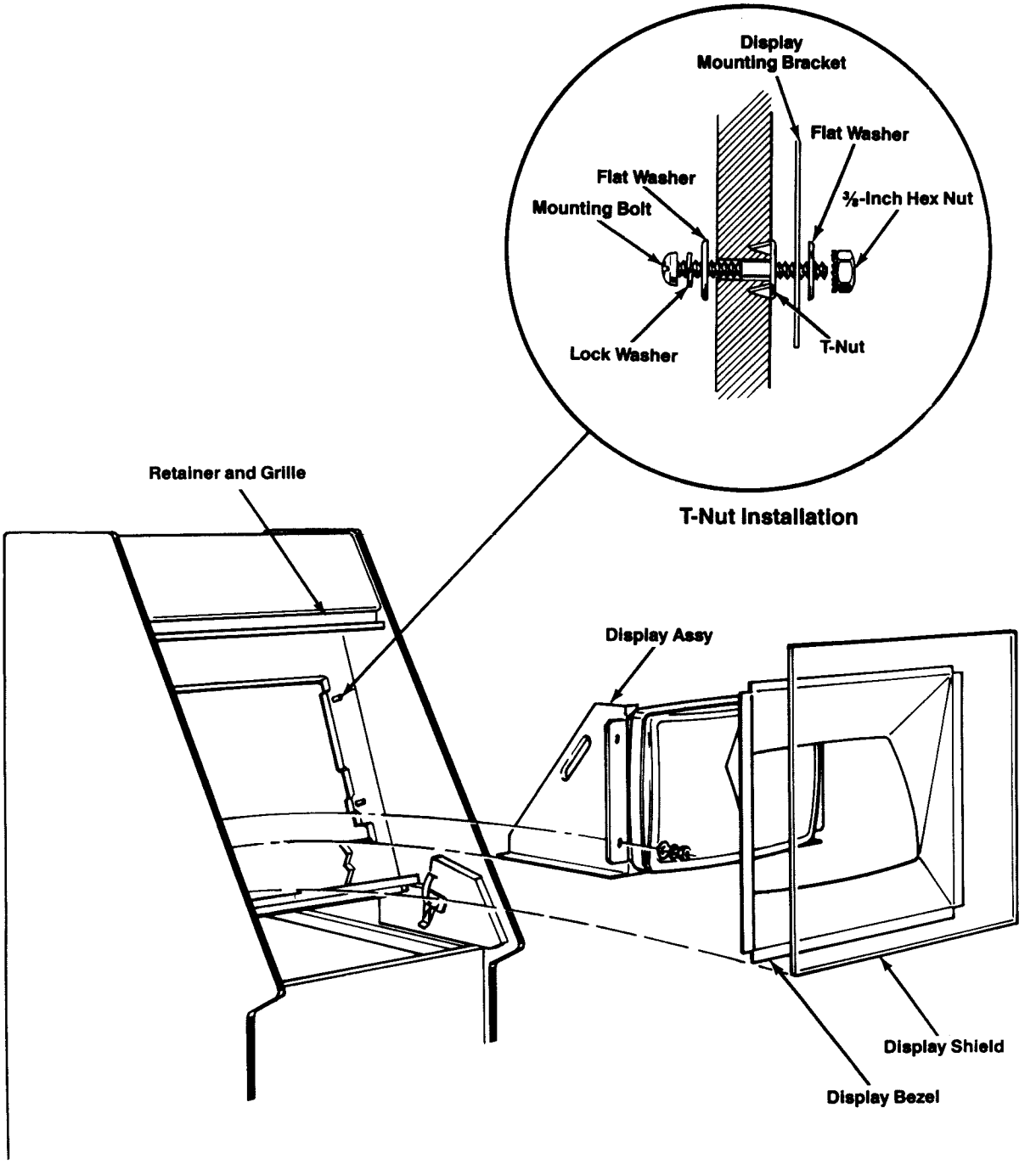

Figure 11 Installing the Display

2. Connect the control-panel harness connector to the game harness. Do not close the control panel.

9. INSTALL THE MAJOR HAVOC PRINTED-CIRCUIT BOARDS

Perform the following procedure to install the Major Havoc PCBs in the game cabinet (see Figure 12).

1. Peel the protective backing from the 1-1/8-inch thick foam pad supplied in the kit.

2. From the front of the cabinet, reach in through the control-panel opening and attach the foam pad to the front wall of the cabinet approximately midway between the upper and lower slotted PCB guides.

3. Connect the Conversion PCB to the Major Havoc game PCB edge connectors.

> **CAUTION**
>
> Do not over-tighten the tie wraps to the printed-circuit boards. If the tie wraps are too tight, the Conversion PCB could bow and cause a faulty contact at the edge connectors.

4. Use tie wraps at each end of the PCBs to secure the Conversion PCB to the Major Havoc PCB.

5. Slide the Major Havoc PCB (with the Conversion PCB attached) into the slot closest to the cabinet wall.

6. Attach the 1/2-inch thick foam pad approximately 1-inch from the top of the Conversion PCB.

7. Position the PCB mounting bracket in the center of the 1/2-inch thick foam pad and press firmly against the pad.

8. Check that the back edge of the Major Havoc PCB is pressed firmly against the 1-1/8-inch foam pad installed in step 2. Use a Phillips screwdriver to secure the PCB mounting bracket to the cabinet with the pan-head screw.

9. Connect the top connector on the main harness to the Conversion PCB.

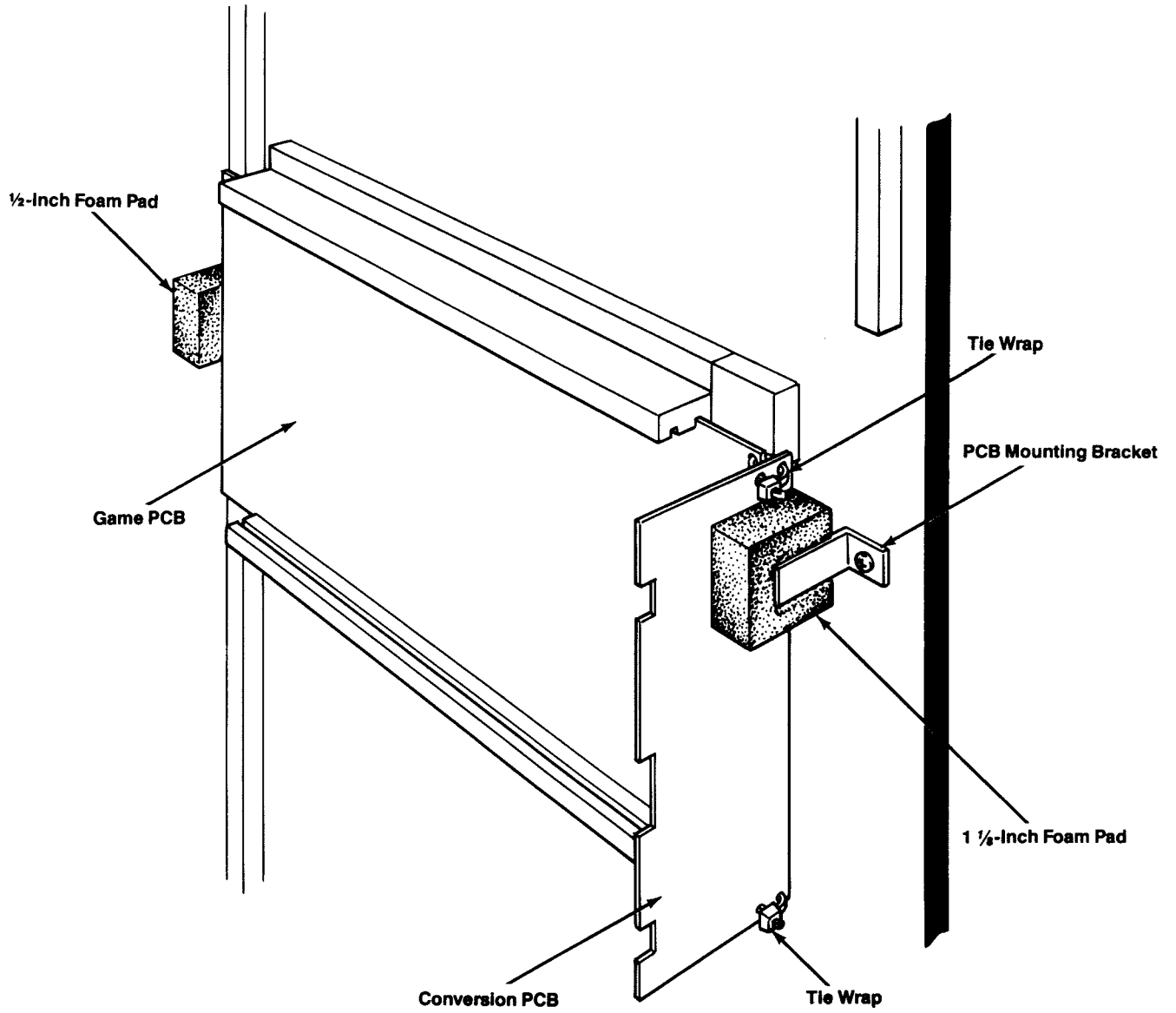

Figure 12 Installing the Major Havoc Printed-Circuit Boards

10. Cut the two tie wraps closest to the bottom connector on the main harness. Turn the bottom connector 180° and attach it to the Conversion PCB. (This will place the red/green wires at pins 1 and 1 and A up. The connector can be attached backwards without causing any damage, but it must be reversed for proper operation of the game.)

11. Use beaded tie wraps at each end to secure the two edge connectors to the Conversion PCB.

R. INSTALL THE POWER SUPPLY

Perform the following procedure to install the modified power supply into the game cabinet.

1. Use a Phillips screwdriver to secure the power-supply base plate and power supply to the cabinet floor with the four screws removed previously.

2. Connect the game harness to connectors J2, J4A, and J5 on the top of the power supply.

3. Connect the power cord to connector J1 on the right side of the power supply.

4. Use a 11/32-inch hex driver to secure the green ground wires to the grounding screw on the power supply with the washer and nut removed previously.

S. INSTALL THE FAN

Perform the following procedure to install the fan in the game cabinet (see Figure 10).

1. Close and lock the rear access panel.

2. Reach through the fan opening in the rear access panel and mark the cabinet cleat at the top and bottom edge of the fan opening.

3. Unlock and remove the rear access panel.

4. Position the mounting block with the side nearest the holes against the cabinet cleat. Center the mounting block between the two marks made in step 2.

5. Position the exhaust fan and bracket on the mounting block with the bracket holes aligned with the holes in the mounting block. Make certain that the fan grille is facing the back of the cabinet.

6. Use a Phillips screwdriver to secure the exhaust fan and mounting block to the cabinet with the two 1-1/4-inch wood screws.

7. Connect the black and white wires on the fan harness to the two fan power-input terminals.

8. Use a Phillips screwdriver to secure the green wire to the fan frame with the self-tapping screw.

9. Connect the fan harness to connector J4B on the power supply.

T. INSTALL THE SELF-TEST CHART

Staple or tape the Major Havoc self-test chart to the inside of the rear access panel.

U. INSTALL THE LABELS

> **NOTE**
>
> Do not remove or mark any of the existing labels on the game cabinet.

Perform the following procedure to install the conversion kit and FCC compliance labels on the game cabinet (see Figure 13).

1. Remove the protective backing from the conversion kit and the FCC compliance labels.

2. Attach the conversion kit label on the back of the game cabinet (directly above the rear access panel).

3. Attach the FCC compliance label over the existing FCC non-compliance label.

V. INSPECT THE MAJOR HAVOC GAME

Before applying power, perform the following procedure to ensure that the game is modified correctly.

1. Carefully check that the conversion has been properly performed.

2. When you are confident that all instructions were properly followed, close and lock the rear access panel.

3. Reach up through the coin-door opening and latch the two spring-draw latches to the control panel.

4. Plug in the game power cord.

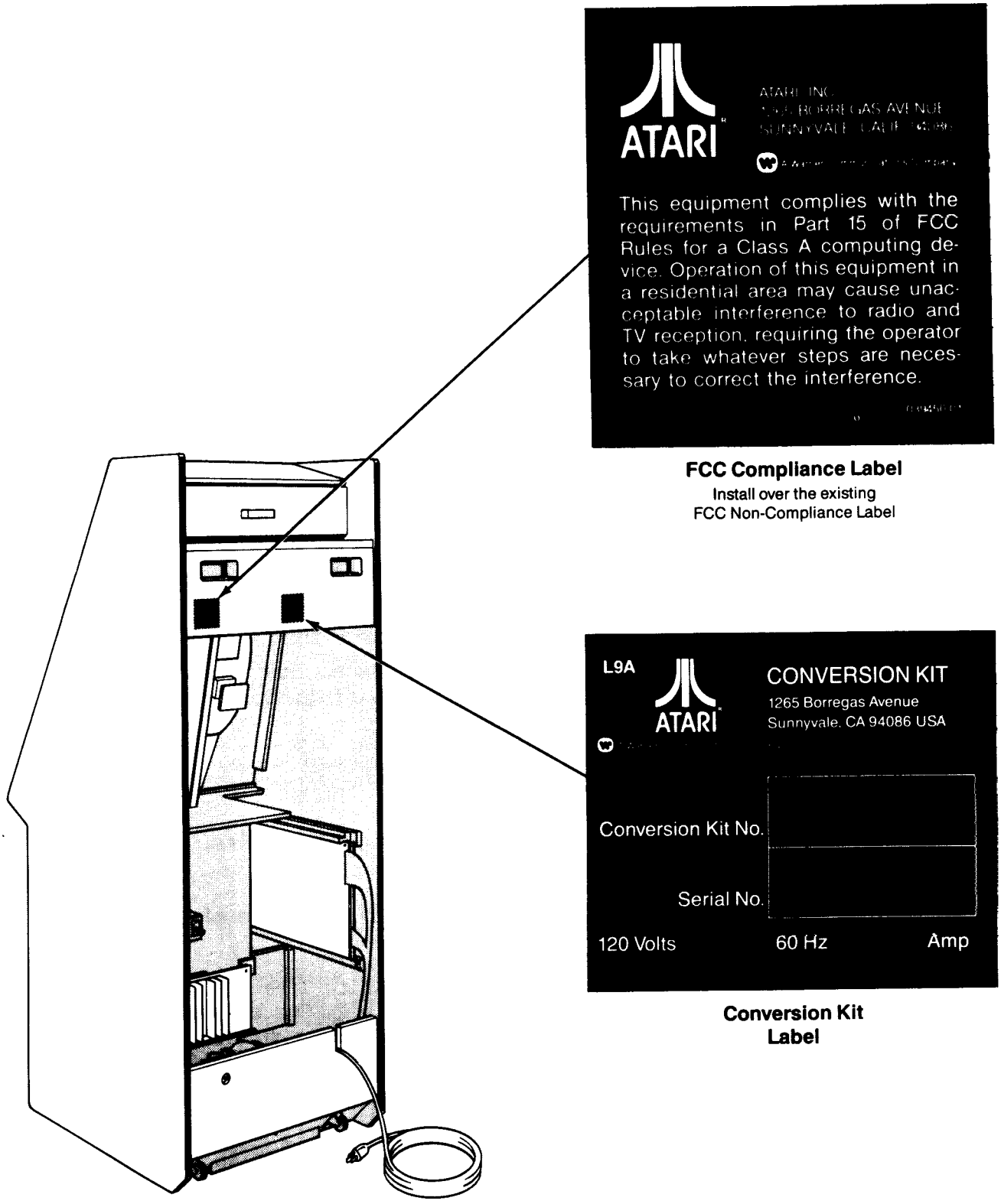

Figure 13 Installing the Labels

5. Set the game self-test switch to the on position and perform the self-test procedure in the Major Havoc operators manual (TM-252).

W. ADJUST THE DISPLAY

Perform the following procedures to adjust the display size, centering, linearity, brightness, and color tracking.

X/Y Center, Size, and Linearity

1. Set the game self-test switch to the on position and obtain any of the self-test displays.

> NOTE
>
> The horizontal (X) adjustments are located on the Conversion PCB (see Figure 14) and the vertical (Y) adjustments are located on the Major Havoc game PCB (see Major Havoc operators manual). The X adjustments on the Major Havoc game PCB are bypassed through the Conversion PCB and are not functional when the Conversion PCB is connected.

2. Adjust the X and Y SIZE and CENTER controls so that the white rectangle fills the screen with the corners visible while the red rectangle corners are off the screen.

Brightness

Perform the following procedure to adjust the display brightness.

1. Set the game to the Self-Test Mode and obtain Screen 6, Color Intensity Test display. See the Major Havoc operators manual for a description of self-test operation.

2. Adjust SCREEN (R535) to make the longest white line visible and the white line above the longest line <u>not</u> visible. See the display manual (TM-183) for the location of the SCREEN control.

Tracking

Perform the following procedure to evaluate and adjust the white tracking.

1. Set the game to the Self-Test Mode and obtain Screen 6, Color Intensity Test display. See the Major Havoc operators manual for a description of the self-test operation.

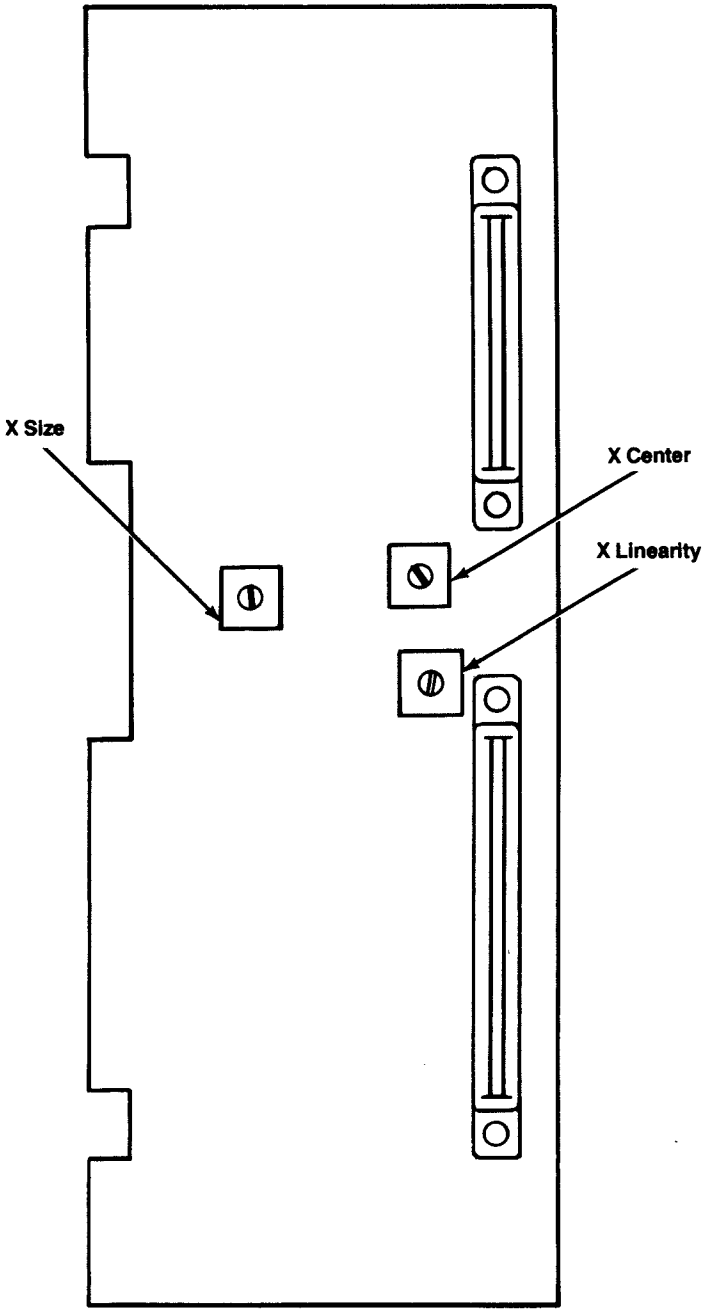

Figure 14 Adjusting the Display

2. Verify that the middle five or six lines are white and remain white as the intensity progresses from dim to bright (top line compared to bottom line). If not, perform the procedure described under Tracking in the display manual (TM-183).

X. SET THE OPTION SWITCHES

Verify that the option switches are set to the desired play options for your location. The recommended play options are 2 coins for 5 starting lives, medium difficulty, and bonus life for 100,000 points. Refer to the Major Havoc operators manual for option switch location and setting information.

Y. UPDATE THE GAME DOCUMENTATION

We suggest that you keep this document and CO-252-04 for conversion kit parts information. Modify the display manual (TM-183) schematics as shown in Figure 15 (for Versions 2, 3, and 4), Figure 16 (for Versions 1, 2, and 3), or Figure 17 (for Version 4).

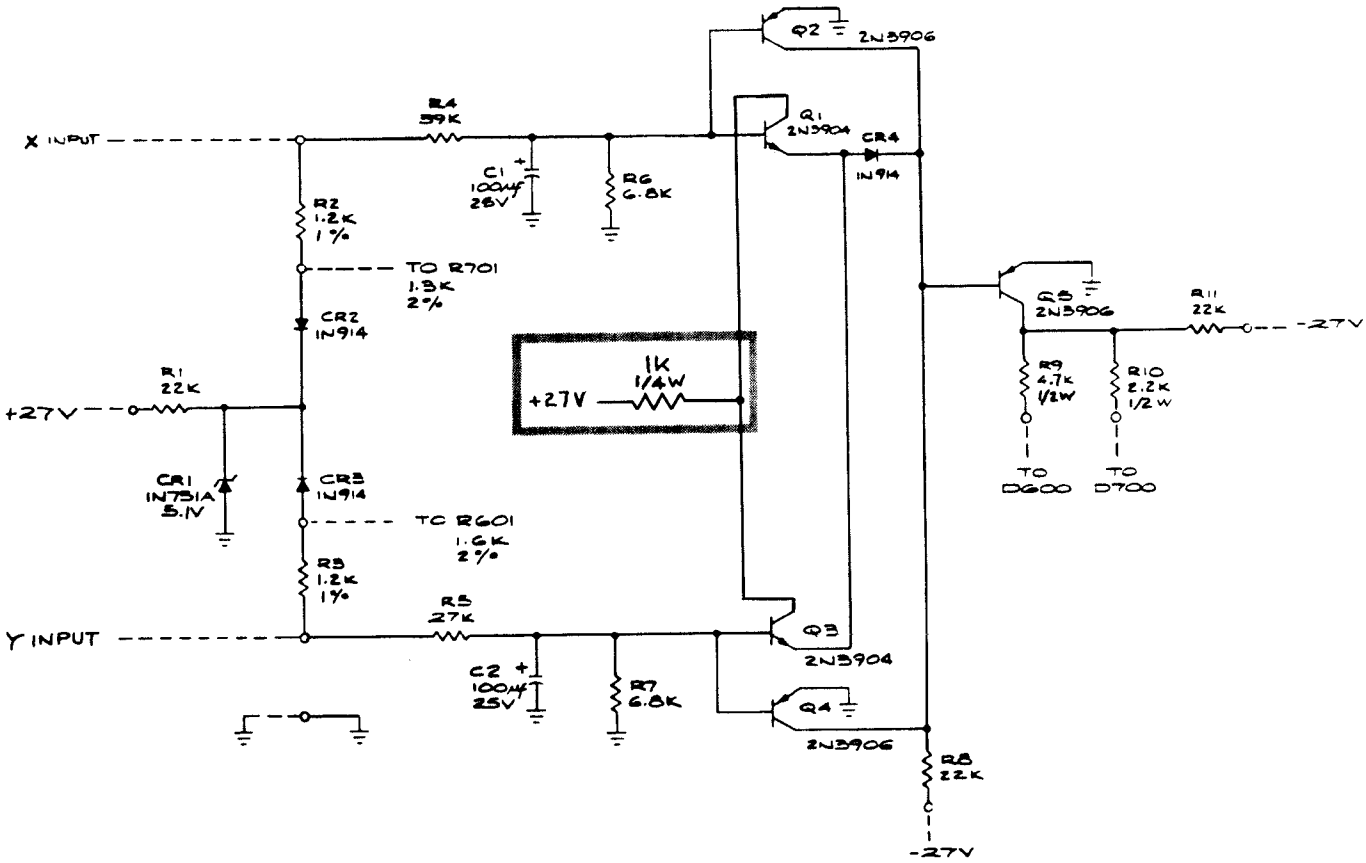

Components outlined by a shaded frame have been added per TM-267.

Figure 15 Input Protection Circuit Schematic (Versions 2,3, and 4)

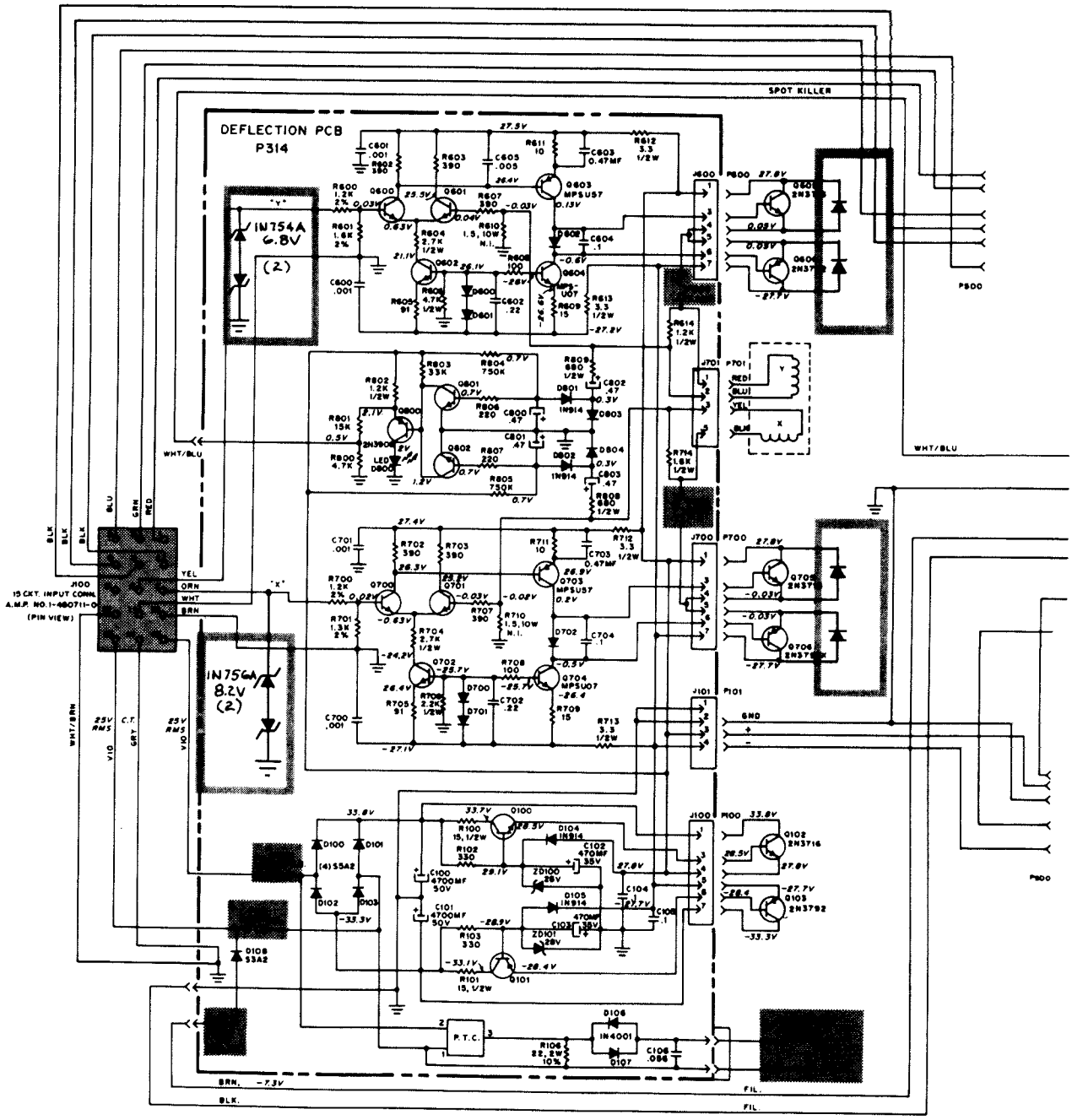

GENERAL NOTES

1. Resistance values in ohms, ¼ watt, ±5%, unless otherwise noted. K = 1,000, M = 1,000,000
2. Capacitance value of 1 or less is in microFarads, above 1 in picoFarads, unless otherwise noted.
3. * Q900 and Q906 are not in High-Voltage PCB.
4. All D.C. voltages are ±10% measured from point indicated to ground, using a high-impedance meter. Voltages are measured with no signal input and controls are in a normal operating position.
5. Circled numbers indicate location of waveform reading.
6. ZD100-101 uses (66X0040-007) zener diode in series with (340X2331-934) 330-ohm resistor in early production models.
7. Use a 1,000:1 probe when measuring G2 (screen) or focus voltage.

Components identified by shading have special characteristics important to safety and should be replaced only with identical types.

Components outlined by a shaded frame have been added per TM-267.

Figure 16 Deflection PCB Schematic (Versions 1,2,and 3)

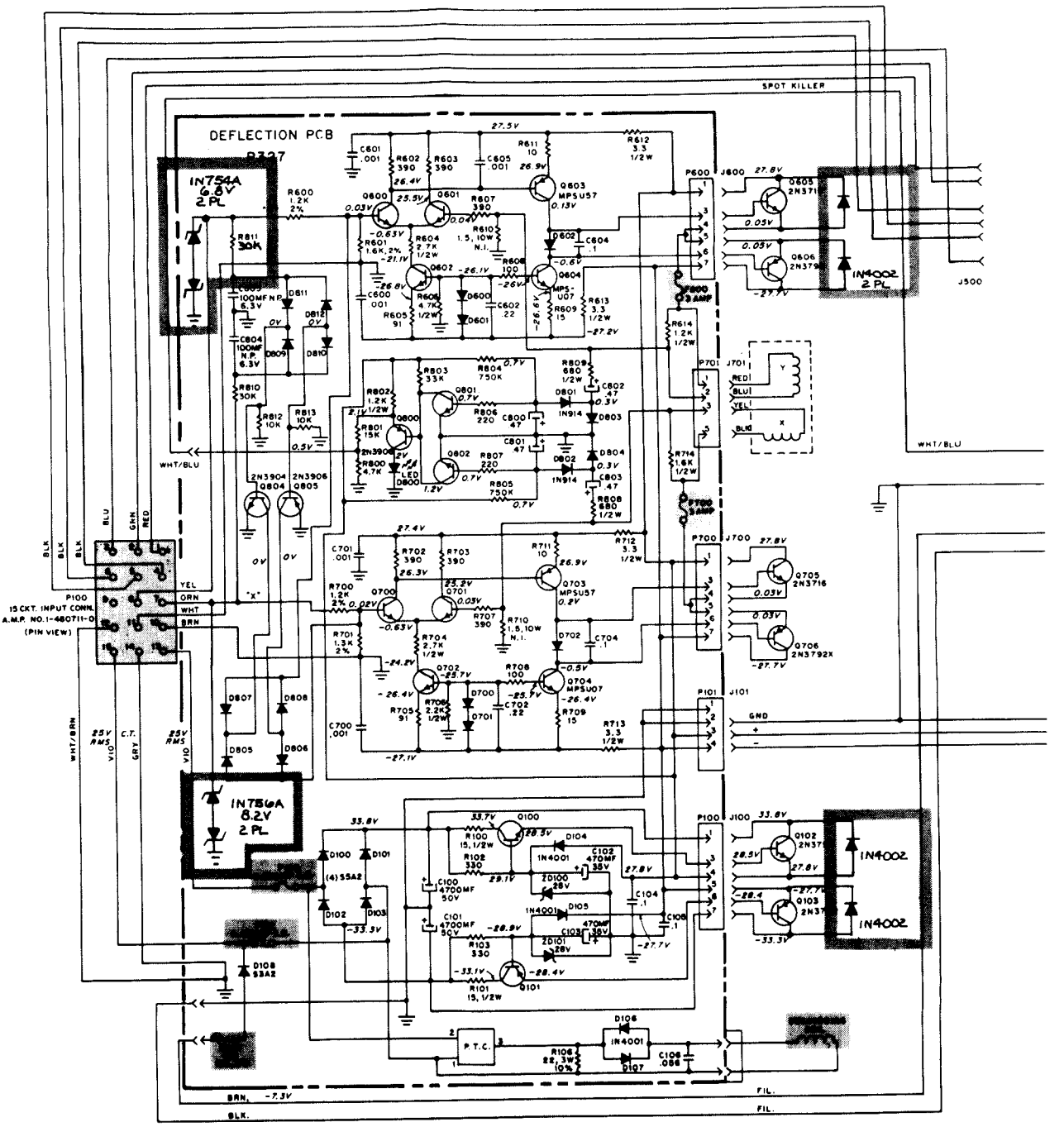

GENERAL NOTES

1. Resistance values in ohms, ¼ watt, ±5%, unless otherwise noted. K = 1,000, M = 1,000,000
2. Capacitance value of 1 or less is in microFarads, above 1 in picoFarads, unless otherwise noted.
3. *Q900 and Q906 are not in High-Voltage PCB.
4. All D.C. voltages are ±10% measured from point indicated to ground, using a high-impedance meter. Voltages are measured with no signal input and controls are in a normal operating position.
5. Circled numbers indicate location of waveform reading.
6. ZD100-101 uses (66X0040-007) zener diode in series with (340X2331-934) 330-ohm resistor in early production models.
7. Use a 1,000:1 probe when measuring G2 (screen) or focus voltage.

Components identified by shading have special characteristics important to safety and should be replaced only with identical types.

Components outlined by a shaded frame have been added per TM-267.

Figure 17 Deflection PCB Schematic (Version 4)

To Receive a Free Set of Multi-Color Side-Panel Decals

The multi-color side-panel decals for your Major Havoc™ Conversion Kit were not included when the kit was shipped to you. However, if you want a set, mail this letter to Atari Customer Service and they will send you these decals at no charge, while supplies last. No postage stamp is necessary if mailed in the U.S.A.

The part numbers of the decals are: Left—042421-01, and right—042421-02.

Game Serial No. that was shipped with your kit _____

Name _____

Firm _____

Address _____

City _____ State _____ Zip _____

Area Code _____ Phone _____

☐ Distributor ☐ Operator Other _____

To Receive a Free Input Protection Circuit PCB Assembly

If you have a Wells-Gardner display in your cabinet, the Input Protection Circuit PCB Assembly is required for your Major Havoc™ game. This small "piggy-back" board was not included in your Conversion Kit when the kit was shipped to you.

However, if you need this board, mail this letter to Atari Customer Service and they will send you the Input Protection Circuit PCB Assembly at no charge. No postage stamp is necessary if mailed in the U.S.A.

The part number of the board is A038088-01.

Game Serial No. that was shipped with your kit _____

Name _____

Firm _____

Address _____

City _____ State _____ Zip _____

Area Code _____ Phone _____

☐ Distributor ☐ Operator Other _____