ORIGINAL VIDEO GAME

# OPERATOR'S MANUAL

## ■ RACING JAM ■

RACING JAM™

© 1997 KONAMI ALL RIGHTS RESERVED.

- Failure to operate the machine correctly could result in malfunction or accidents,so please read this manual carefully before commencing operation. Be sure to operate the machine as described in this manual.
- Keep this manual carefully so as to be ready for use when necessary.

PN.0000045989 GY676

KONAMI

# About this product

Thank you for purchasing this Konami product. This manual explains how to operate your game machine correctly and safely.

**•Failure to operate the machine correctly could result in malfunction or accidents, so please read this manual carefully before commencing operation. Be sure to operate the machine as described in this manual.**
**•Keep this manual carefully so as to be ready for use when necessary.**
**•If the machine still fails to display or to get started, immediately turn OFF the power switch and contact your nearest dealer.**

**•In this manual, the right-side steering wheel model GY676-TB/HD is described. The GY676-UC, a left-side steering wheel model, is different from the illustrations in this manual.**

**•This manual covers the following models:**

**•GY676-TB** **•GY676-HD**

**•GY676-UC**

The specifications of GY676-TB may be somewhat different from GY676-HD and GY676-UC. In such a case, read the descriptions of the model which applies to the game machine you are operating.

•The specifications of this product are subject to change without notice for reasons such as improving the performance.

•The contents of this game, its main data and design are protected by copyright law and industrial property law.

•Unauthorized reproduction of this document or any of its contents is strictly forbidden.

© 1997 KONAMI ALL RIGHTS RESERVED.

This equipment has been tested and found to comply with the limits for a Class A digital device, pursuant to Part 15 of the FCC Rules.
These limits are designed to provide reasonable protection against harmful interference when the equipment is operated in a commercial environment. This equipment generates, uses, and can radiate radio frequency energy and, if not installed and used in accordance with the instruction manual, may cause harmful interference to radio communications. Operation of this equipment in a residential area is likely to cause harmful interference in which case the user will be required to correct the interference at his own expense.

SPATIALIZER®
3D Stereo
PORTIONS OF THIS PRODUCT MANUFACTURED UNDER A LICENSE FROM DESPER PRODUCTS,INC. SPATIALIZER©
AND THE CIRCLE-IN-SQUARE DEVICE ARE TRADEMARKS OWNED BY DESPER PRODUCTS,INC. US Patent No 5412731

# Contents


■ **Precautions for use** ..... **2**
安全使用注意事項 ..... **10**

■ **Locations of warning and other safety labels** ..... **7**
警告標簽等的張貼位置 ..... **15**

**1 Specifications** ..... **9**
規　格 ..... **17**

**2 Names of parts and list of main parts** ..... **18**

**3 How to play** ..... **22**

**4 Opening and closing the doors**
4-1 Opening and closing the maintenance door ..... **24**
4-2 Opening and closing the coin door ..... **25**

**5 Networking game machine and PCB settings**
5-1 How to networking ..... **26**
5-2 PCB start-up check (self test) ..... **27**
5-3 Correcting the positions of the steering wheel etc. ..... **28**
5-4 Adjusting the game environment (manual test) ..... **29**
5-5 Mode descriptions ..... **30**
5-6 Measures to be taken when there is a network abnormality ..... **39**

**6 Setting up the game machine**
6-1 Connecting the unit ..... **41**
6-2 Fastening the adjusters ..... **44**
6-3 Power unit ..... **45**
6-4 Service panel ..... **45**
6-5 Separating and moving the units ..... **46**
6-6 Moving the coin counter ..... **50**

**7 Maintenance and annex**
7-1 Replacing the coin selector ..... **51**
7-2 Replacing the fluorescent light ..... **52**
7-3 Replacing the LCD projector lamp unit ..... **53**
7-4 Replacing the button ..... **54**
7-5 Replacing and adjusting the potentiometer ..... **55**
7-6 Replacing the shift unit microswitch ..... **64**
7-7 Inspecting and replacing the motor brushes ..... **65**
7-8 Replacing the timing belt and adjusting its tension ..... **66**
7-9 Resetting the circuit protector and replacing the fuse ..... **67**
7-10 Cleaning the air filter ..... **69**
7-11 Adjusting the LCD projector ..... **72**
7-12 Wiring diagram ..... **79**

ENGLISH

# Precautions for use

In this manual, the precautions to be followed without fail in order to prevent damage to persons to install, use or maintain “RACING JAM™” or other persons or to properties are shown as follows.

## Be sure to read the following

**•The following suggestions show the degree of danger and damage caused when the product is used improperly with the suggestions disregarded.**

| | |
|---|---|
| **WARNING** | **Indicates a situation where disregarding the suggestions could result in death or serious injury.** |
| **CAUTION** | **Indicates a situation where disregarding the suggestions could result in injury or product damage.** |

**•The following graphic suggestions describe the types of precautions to be followed.**

| | |
|---|---|
| | **Indicates a matter of which care should be taken.** |
| | **Indicates a matter which is forbidden.** |
| | **Indicates a matter which should be performed without fail.** |

## Setting Up

**WARNING**

**•Be sure to consult your nearest dealer when setting up, moving or transporting this product.**
·This product should not be set up, moved or transported by anyone other than industry specialists. Doing so could result in injury or product damage.
·When installing the machine, make sure that all the 14 adjusters are tight on the floor and that the machine is placed stably and horizontally. Unstable set-up may get the machine shaky and result in personal injury or machine trouble.
·When setting up this product, take care that no undue force is applied to the connecting sections of the game machine. Failure to do so could cause injury, accidents or product damage.

**•This product is an indoor game machine. Never set up the game machine outside.**
·Setting up this product outside could result in accidents or equipment failure.

**•Do not set up the game machine near emergency exits.**
·Doing so could block exits in time of emergency and could result in death or serious injury.

**•Do not set up the game machine.**
·In a place exposed to rain or moisture.
·In a place exposed to direct sunlight.
·In a place exposed to direct heat from air-conditioning and heating equipment, etc..
·near hazardous flammable substance such as thinner and kerosene.
·on an inclined or uneven floor.
·near fire extinguishing equipment.
·in a place exposed to strong vibration.
·in a place exposed to excessive dust.
·near equipment generating strong magnetism or electric waves.

**•Do not place containers holding chemicals or water on or near the game machine.**
·Electrical shock or damage could be caused by water or foreign matter entering the inside of the machine.

**•Do not place objects near the ventilating holes.**
·Doing so could cause the internal temperature to rise excessively, resulting in fire or equipment failure.

**•Do not bend the power cord by force or place heavy objects on it.**
·Doing so could result in electric leakage or fire.

**•Never plug or unplug the power cord with wet hands.**
·Doing so could result in electrical shock.

**•Never unplug by pulling the power cord.**
·Doing so could damage the cord, resulting in electric leakage or fire.

ENGLISH

## Setting Up

**CAUTION**

- **Be sure to use indoor wiring for within the specified voltage range. For extension cord, use indoor wiring of the specified rating or more.**
  ·Failure to do so could result in fire or equipment failure.
- **Be sure to use the attached power cord and networking cable.**
  ·Otherwise a fire or machine trouble may result.
- **Never plug more than one cord at a time in the electrical receptacle.**
  ·Doing so could result in fire or electrical shock.
- **Never use the attached networking pin jack for any game machines other than the "RACING JAM™" machines, nor for any audio-visual appliances and communication equipment. While the communication mode is not used, keep the networking pin jack open.**
  ·Otherwise the game may fail to work or get in trouble.
- **Lay the power cord, networking cable and unit connecting pipes away from the passages where people walk along.**
  ·Otherwise people may trip over them and get injured. The cable may also be stepped on and get damaged.
- **Do not bend the networking cable by force or place heavy objects on it.**
  ·Doing so could result in electric leakage or fire.
- **Do not pull by force the unit connecting pipe located between the projector unit and cockpit unit.**
  ·Doing so could result in equipment failure, electrical shock or fire.
- **Be sure to ground this product.**
  ·Otherwise an electric shock or machine trouble may be caused.
- **Clearance of 100 mm (3.94in) or more should be created between the game machine and walls. When two or more machines are placed side by side, be sure to provide a clearance of 100 mm (3.94in) or more between them.**
  ·Otherwise the machine (s) cannot be ventilated well, resulting in malfunction.

## Operation

**WARNING**

- **If there is any abnormality such as smoke, bad smell or abnormal noise being emitted from the machine, immediately turn OFF the power switch and unplug the power cord from the receptacle to stop operating it.**
  ·Using the machine in abnormal conditions could result in fire or accidents.

**In case of abnormality**

**1** Turn OFF the power switch.
**2** Unplug the power cord from the receptacle.
**3** Contact your nearest dealer.

- **Do not leave the power cord plugged improperly or covered with dust.**
  ·Doing so could result in electrical shock or fire, so inspect the power cord periodically.
- **Never disassemble, repair or modify any section other than those specified in this manual.**
  ·Doing so could result in fire, malfunction or equipment failure.
  ·Ask your nearest dealer to perform repairing, etc..
  ·We do not assume any responsibility for any damages that would be caused by tampering with the machine.

ENGLISH

## Operation

**CAUTION**

- **Do not use this product anywhere other than industrial areas.**
  ·Using in a residential area or an area next to a residential area could affect signal reception of radios, television sets, telephones, etc..
- **The following users should not play the game.**
  ·Doing so could cause accidents or illness.

| | |
|---|---|
| ·Those under the influence of alcohol. | ·Those suffering from or being treated for arm or wrist ailments. |

- **Do not plug or unpug the power cord with wet hands.**
  ·Doing so could result in electrical shock.
- **In handling the power cord and the networking cable, follow the instructions below.**
  ·Otherwise an electric leak, fire or electric shock may result. Normal communication play may also be impossible.

| | |
|---|---|
| ·Do not damage the power cord. | ·Do not modify the power cord. |
| ·Do not bend the power cord excessively. | ·Do not twist the power cord. |
| ·Do not heat the power cord. | ·Do not pull the power cord. |
| ·Do not bind the power cord. | ·Do not tread on the power cord. |
| ·Do not sandwich the power cord. | ·Do not drive a nail into the power cord. |

- **If the power cord or power plug becomes damaged, stop using the machine immediately and ask your nearest dealer to replace the parts.**
  ·Using a damaged power cord or power plug could result in fire or electrical shock.
- **While the machine is in operation, do not touch the radiation cover, nor place anything on and around the cover.**
  ·The hot cover may get you burnt or result in a fire.

## Inspection and cleaning

**WARNING**

- **Be sure to turn OFF the power switch and unplug the power cord from the receptacle before inspecting or cleaning the machine.**
  ·Failure to do so could result in electrical shock.
- **When replacing parts, be sure to use parts of the correct specifications. Never use parts other than the specified ones.**
  ·Using improper parts could result in fire or equipment failure.
- **The projector unit has some internal parts with high voltage. Only a qualified industry specialists is allowed to open the back door of the projector unit. With this back door open, be very careful not to touch unnecessary parts.**
  ·Otherwise an accident or electric shock may result.
- **Never disassemble, repair or modify any section other than those specified in this manual.**
  ·Doing so could result in fire, malfunction or equipment failure.
  ·Ask your nearest dealer to perform repairing, etc..
  ·We do not assume any responsibility for any damages that would be caused by tampering with the machine.
- **To clean the game machine, wipe it with a soft cloth dampened in a neutral detergent and wrung out.**
  ·Using organic solvents such as thinner may decompose the material.
  ·Electrical shock or equipment failure could be caused by water entering the inside of the machine.

ENGLISH

## Moving and transportation

**CAUTION**

- **The game machine contains parts such as the projector, electronic components and precision components which are sensitive to vibrations and impacts. Great care therefore should be taken when moving and transporting the game machine. Be sure not to let the machine tip over.**
- **Before moving the machine, be sure to turn OFF the power switch, unplug the power cord, from the receptacle and remove the power cord and networking cable from the machine.**
  ·Stepping on or tripping over the power cord or the networking cable may result in an accident or damage the machine.
- **Before moving the machine, be sure to separate the cockpit unit and projector unit and fully raise the 14 adjusters so that the machine can be moved on the casters.**
  ·Otherwise accidents, machine damage or trouble may result.
- **When moving the machine, do not hold the unit connecting pipe.**
  ·Otherwise accidents or machine damage may result.
- **When moving the units, be careful not to apply undue force.**
  ·The screen unit in particular is easy to turn over, which may cause an accident or damage the machine.
- **When moving the screen unit, be sure to press it along sideways (to the right or left). When moving it on a slope or getting it over a level difference, be sure to take the buddy system.**
  ·Otherwise the unit may turn over, resulting in an accident or damage.
- **When moving the units, be careful not to give undue force to the cockpit unit couplers.**
  ·Otherwise you may get injured or the machine damaged.

## Disposal

**WARNING**

- **When disposing of the screen unit of this product, do not leave it with the screen exposed.**
  ·Doing so could result in fire due to direct sunlight, etc..

**PRECAUTION IN HANDLING**

- When setting up, inspecting, maintaining, moving or transporting this product, follow the procedures and instructions set forth in this manual and perform such work safely.
- Do not remove labels of “WARNING”, “CAUTION”, etc. attached to the product.
- Do not set up, handle, inspect, maintain, move or transport this product under conditions equivalent to the condition of “WARNING” or “CAUTION” specified in this manual.
- If a new owner is to have this product as a result of transfer, etc., be sure to give this manual to the new owner.

# Locations of warning and other safety labels



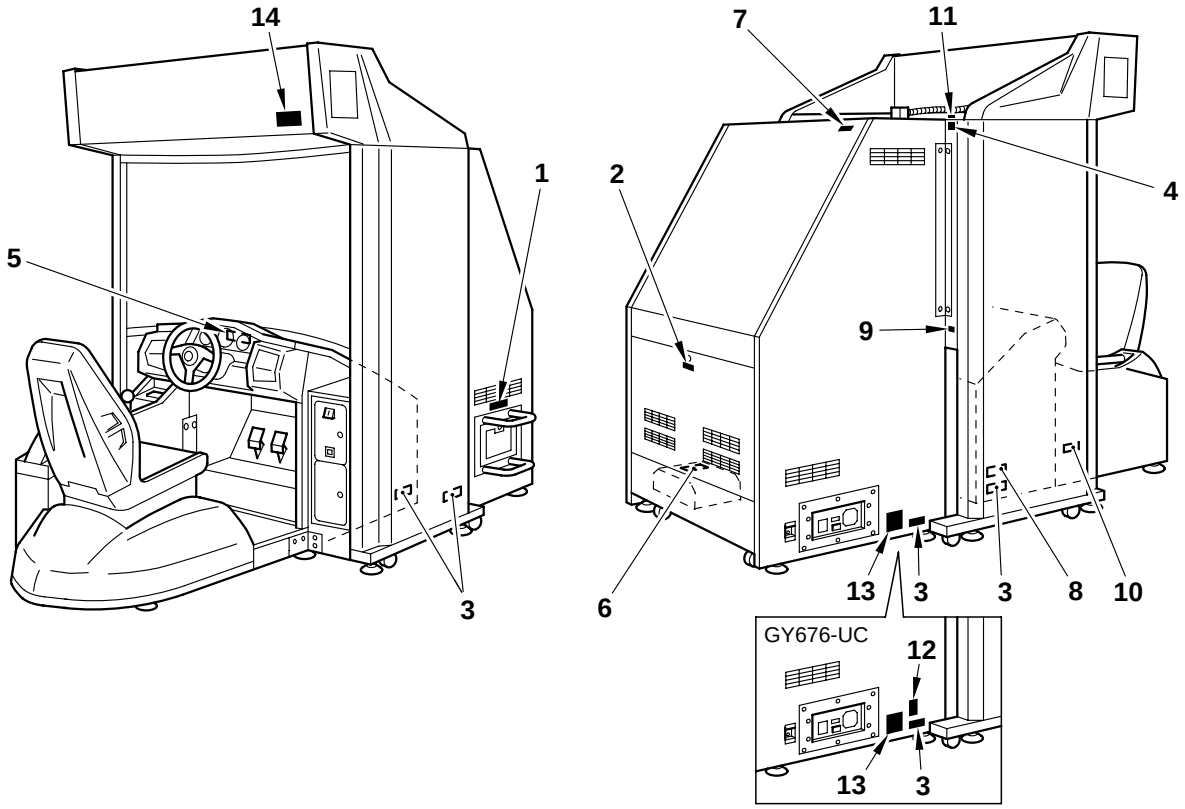


## Types of warning and other safety labels

1

**⚠ WARNING**

HEAT DANGER! DURING OPERATION, HOT AIR IS VENTED FROM THIS HOLE. DO NOT TOUCH OR PLACE ITEMS NEAR THE VENT.

PN.0000037216

2

**⚠ WARNING**

ELECTRICAL SHOCK HAZARD. DO NOT OPEN EXCEPT FOR SERVICE.

0000032450

3

**⚠ WARNING**

Ensure all leg levellers are securely set and game cabinet is level.

0000036360

4

**⚠ WARNING**

UNIT MAY FALL IF YOU PUSH OR TRUCK FROM THE WRONG SIDE. TO MOVE THE UNIT, PLEASE PUSH AS INDICATED IN THE PICTURE.

PN.0000037433

5

**⚠ HAZARDOUS VOLTAGE**

PN. 0000032445

6

**⚠ HIGH TEMPERATURE**

12

THIS EQUIPMENT COMPLIES WITH THE REQUIREMENTS IN PART 15 OF FCC RULES FOR A CLASS A COMPUTING DEVICE. OPERATION OF THIS EQUIPMENT IN A RESIDENTIAL AREA MAY CAUSE UNACCEPTABLE INTERFERENCE TO RADIO AND TV RECEPTION REQUIRING THE OPERATOR TO TAKE WHATEVER STEPS ARE NECESSARY TO CORRECT THE INTERFERENCE. THIS DEVICE MUST ACCEPT ANY INTERFERENCE RECEIVED, INCLUDING INTERFERENCE THAT MAY CAUSE UNDESIRED OPERATION.

KONAMI®

PN.0000032565

GY676-UC only

13

| | |
|---|---|
| MODEL | GY676 RACING JAM |
| POWER | AC120 V / 60 Hz<br>850 W |
| MANUFACTURER | KONAMI CO., LTD. |
| DATE OF MANUFACTURE | october 1997 |
| WEIGHT | 490 Kg (1081 lb) |
| SERIAL NUMBER | |

KONAMI®
MADE IN JAPAN
PN.0000037437
INDOOR USE

- The above is an example. The entries are different from destination to destination.

7

Weight 165kg(364lb)

8

Weight 115kg(254lb)

9

Weight 100kg(221lb)

10

Weight 80 kg(176lb)

11

Weight 30 kg( 66 lb)

14

Parental Advisory Warning

This game is classified

**SULITABLE FOR ALL AGES**

PN.0000032845

GY676-UC only

# MEMO

ENGLISH

# 1 Specifications



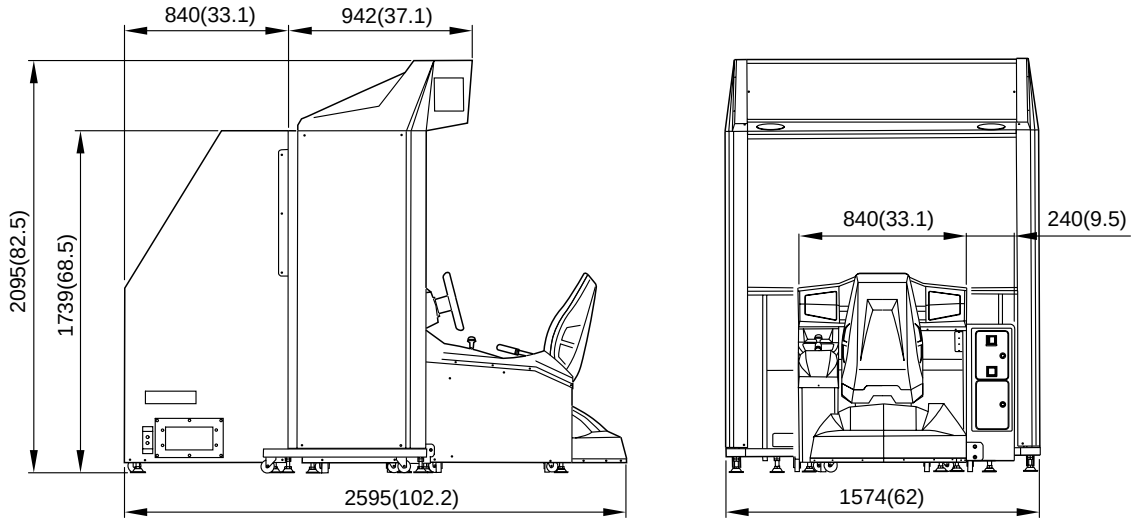


## Specifications

| | |
|---|---|
| Dimensions | Refer to the figure above: mm(in) |
| Weight | Total weight : Approx. 490 kg (1081lb)<br>Projector unit: Approx. 165 kg (364lb), Screen unit: Approx. 100 kg(221lb)<br>Cockpit unit: Approx. 195 kg(430lb), Billboard unit: Approx. 30kg (66lb) |
| Rated power consumption | 850W |
| Monitor | LCD projector (70 inch wide screen) |
| Service condition | Temperature 5 to 35˚C (41 to 95˚F), Humidity 20 to 80%(No dewing is allowed.) |
| Attachments | · Instruction manual ..... This manual<br>· Keys for coin door ..... 2<br>· Keys for maintenance ..... 2<br>· Spare fuse (30A) for game PC board ..... 1<br>· Unit connecting pipe ..... 1<br>· Unit connecting pipe fixing screw (M5 x 20L) ..... 12<br>· Joint fixture ..... 2<br>· Joint fixture mounting screw (M6X20L) ..... 4<br>· Billboard unit mounting screw (M8X30L) ..... 3<br>· Spare LCD projector lamp unit ..... 1<br>· AC power cord ..... 1<br>· Networking cable ..... 1<br>· Racing number label ..... 1<br>· LCD projector lens cap ..... 1<br>· Projector remote controller ..... 1<br>· Projector unit/screen unit connection screw (M8x30L) ..... 4<br>· AA size batteries (R06) ..... 4 |

•If any part is defective or not found, contact your nearest dealer.

•The specifications of this product are subject to change without notice for reasons such as improving the performance.

# ■ 安全使用注意事項

本書説明爲防止危害“RACING JAM™”的設置、使用、維護等人員及他人和財產的安全注意事項，本書內容務請遵守。

CHINESE

## 務　請　閱　讀

●本書使用如下標注，區分無視表示內容、錯誤使用時產生的危險和損害程度。

| | |
|---|---|
| ⚠警告 | 該項標注表示“有可能造成死亡或身負重傷”的內容。 |
| ⚠注意 | 該項標注表示“有可能造成傷害或物品損壞”的內容。 |

●本書使用如下圖標，説明務請遵守的內容種類。

| | |
|---|---|
| ⚠ | 本圖標表示“提請注意”的內容。 |
| ⃠ | 本圖標表示“禁止”的內容。 |
| | 本圖標表示“強制實行”的內容。 |

## 設置時

●**設置、移動或搬運時，務必同當地的經銷店商洽。**
▶非專業人員執行設置、移動或搬運時，有可能受傷或損壞殼體。
▶安裝本機時，務必使十四個位置的可調支腳接觸地面，証實殼體呈水平狀態。無傾斜。固定不穩定時，可引起殼體晃動，及至受傷或造成事故。
▶設置本機時，不得在殼體連接部位強加外力。
否則，可致受傷或造成事故、損壞殼體。

●**本機爲室內用游戲機，千萬不要設置在室外。**
▶設置在室外，可造成事故或故障。

禁 止

●**本機不得設置在建筑物太平門附近。**
▶否則，發生災害時妨礙人們逃生，造成傷亡。

禁 止

●**本機尚不得設置在以下場所。**
▶否則，可造成事故或故障。
・漏雨或潮濕結露的場所
・陽光直射的場所
・直接受到取暖裝置的熱氣吹拂的場所
・煤油、信那水等有引火性的危險物附近
・傾斜、不堅硬、不穩定的地面
・消防設備的附近
・晃動劇烈的場所
・多灰塵的場所
・產生強大磁場或電波的設備附近

禁 止

●**本機上面或周圍不得放置盛水或藥劑的容器或物品。**
▶水份或異物進入內部，可致觸電或故障。

禁 止

●**通風口附近不得放置物品。**
▶有妨通風，則內部溫度異常昇高，造成火災或故障。

禁 止

●**不得強行彎曲電源軟線，也不得在其上壓放重物。**
▶否則，可造成漏電事故或火災。

禁 止

●**千萬不得用濕手拔下或插入電源插頭。**
▶否則，可致觸電。

禁 止

●**不得牽拉電源軟線拔下電源插頭。**
▶否則，電源軟線損傷，造成漏電事故或火災。

禁 止

CHINESE

CHINESE

## 設置時

### ⚠注意

●務必使用符合規格的電源。利用加長電線時，應使用符合規格的室內用線。
▶否則，可造成火災或故障。

●請務必使用附屬的電源軟線和通信用纜線。
▶否則，可造成火災或故障。

●千萬不得使用多分支插座。
▶否則，可造成火災或觸電。

禁 止

●通信連接用的插銷不可與「RACING JAM™」以外的游戲機、音像機器或通信機器連接。在不進行通信連接時，不要將通信連接用的插銷與任何東西連接。
▶否則，不能正常進行游戲，引起故障。

禁 止

●不得將電源軟線、通信用纜線、裝置連接管等伸出到被人踐踏和絆人通道上。
▶否則，可致翻倒傷人，而且可損傷軟線。

禁 止

●不可將通信用纜線強行扭曲或壓放重物。
▶否則，不能正常進行游戲。

禁 止

●不得在投影裝置和座席裝置的連接管上壓放重物，或強行牽拉。
▶否則，可造成故障、觸電或火災。

禁 止

●本產品必須連接地線。
▶否則，可造成觸電或故障。

連接地線

●設置本機時，請距牆壁10公分以上，並且，將本機並列設置時，機體之間應相隔10公分以上。
▶否則本體不能正常散熱，造成故障。

## 使用時

### ⚠警告

●萬一從本機中冒煙、發出氣味或異常聲響時，應立即關閉電源開關，并從插座上拔下電源插頭，停止使用。
▶在異常狀態下使用，可造成火災或事故。

拔下電源插頭

**判 斷 爲 異 常 時**

1 斷開電源
2 從插座上拔下電源插頭
3 通知當地的經銷店

●不得在電源插頭未正確插入插座中或積滿灰塵的狀態下放置不管。
▶否則，可造成觸電或火災，應定期檢查。

禁 止

●千萬不得拆卸、修理或改造本書未指示的部位。
▶否則，可造成火災、異常工作或故障。
需要修理等時，請委託當地的經銷店。
因改造本機而造成損害，本公司概不負責。

禁止拆卸

## 使用時

### ⚠注意

●**本機不得在工商業地區以外使用。**
▶在住宅區或其鄰接處使用，會妨礙電視機、收音機、電話機等接受信號。

禁 止

●**應提請屬於下列情況之一的顧客，不要利用本機游戲。**
▶否則，可致事故或引發疾病，加重症狀。

| |
|---|
| ・飲酒者　・手臂、手腕有病，或正在接受治療 |

●**千萬不得用濕手拔下或插入電源插頭。**
▶否則，可致觸電。

禁 止

●**使用電源軟線和通信用纜線時，請遵守以下事項。**
▶否則，可造成漏電事故或火災、觸電。或者不能進行正常的通信遊戲。

| | | | | |
|---|---|---|---|---|
| ・劃傷 | ・加工 | ・強行彎曲 | ・扭轉 | ・加熱 |
| ・牽拉 | ・打結 | ・腳踏 | ・擠壓或打釘 | |

●**萬一電源軟線、電源插頭損傷時，應立即停止使用，委託當地的經銷店更換零件。**
▶在損傷狀態下使用，可造成火災或觸電。

●**使用時不可接觸放熱罩或在其附近放置物品。**
▶否則，會因高溫燙傷，或造成火災。

禁 止

## 檢查和打掃

### ⚠警告

●**檢查或打掃本機時，務必斷開電源，從電源插座上拔下電源插頭。**
▶否則，可致觸電。

拔下電源插頭

●**更換零件或易耗品時，務必使用本公司指定的產品。千萬不得使用或混用其他產品。**
▶否則，可造成火災或故障。

禁 止

●**投影裝置內部有高壓流動，非常危險。除技術人員以外，不可打開投影裝置的背面門。另外，在投影裝置 背面門打開時，不可隨意觸碰，請充分予以注意。**
▶否則可致事故或有觸電危險。

禁 止

●**千萬不得拆卸、修理或改造本書未指示的部位。**
▶否則，可造成火災、異常工作或故障。
需要修理等時，請委託當地的經銷店。
因改造本機而造成損害，本公司概不負責。

禁止拆卸

●**打掃本機時，用軟布蘸取中性洗劑，擰乾後再擦拭。**
▶使用信那水等有機溶劑，可致本機變質。
▶本機內部滲水，可造成觸電或故障。

CHINESE

CHINESE

## 移動／搬運時

### ⚠注意

●本機內部裝有投影機、電子元件、精密器件等，不耐震動和沖撞的零件。移動和搬運時，應精心操作。
千萬不要翻倒橫放。

禁 止

●移動本機前，請先切斷電源開關，從插座上拔下電源插頭，從機體上卸下電源軟線和通信用纜線。
▶不可踩踢或牽拉電源軟線和通信用纜線，否則，可造成事故和破損。

拔下電源插頭

●移動本機前，務必將座席裝置和投影裝置分離后，將十四支可調支腳調至最上面，用腳輪移動。
▶否則會造成破損或故障。

●移動本機時請不得帶動裝置連接管一起移動。
▶否則會造成破損或故障。

●移動各裝置時，不可施加過份的力量。
▶特別是屏幕裝置翻倒時造成事故和破損。

●移動各裝置時，不可向座席裝置連接部施加過份的力量。
▶否則，可致受傷或事故，破壞機器本體。

●屏幕裝置根據推動方向會翻倒。移動時應面對屏幕向左右方向推動。在斜面或臺階處移動時必須由兩個人以上進行。
▶否則翻倒時造成事故和破損。

## 廢　棄

### ⚠警告

●廢棄處分本機的屏幕裝置時，不可將屏幕裸露放置。
▶否則，會受直射陽光等影響造成火災。

禁 止

### 請留意

●本機的設置、操作、檢查、打掃、移動及搬運，請遵照本書所載步驟及內容進行，確保安全。

●不要揭下貼在本機上的“警告”“注意”等標簽。

●不要在相當於間接性警告或注意的狀態下，設置、操作、檢查、打掃、移動及搬運等。

●因轉讓等，本機的所有者發生變化時，務必將本書轉交給新的所有者。

# ■ 警告標簽等的張貼位置

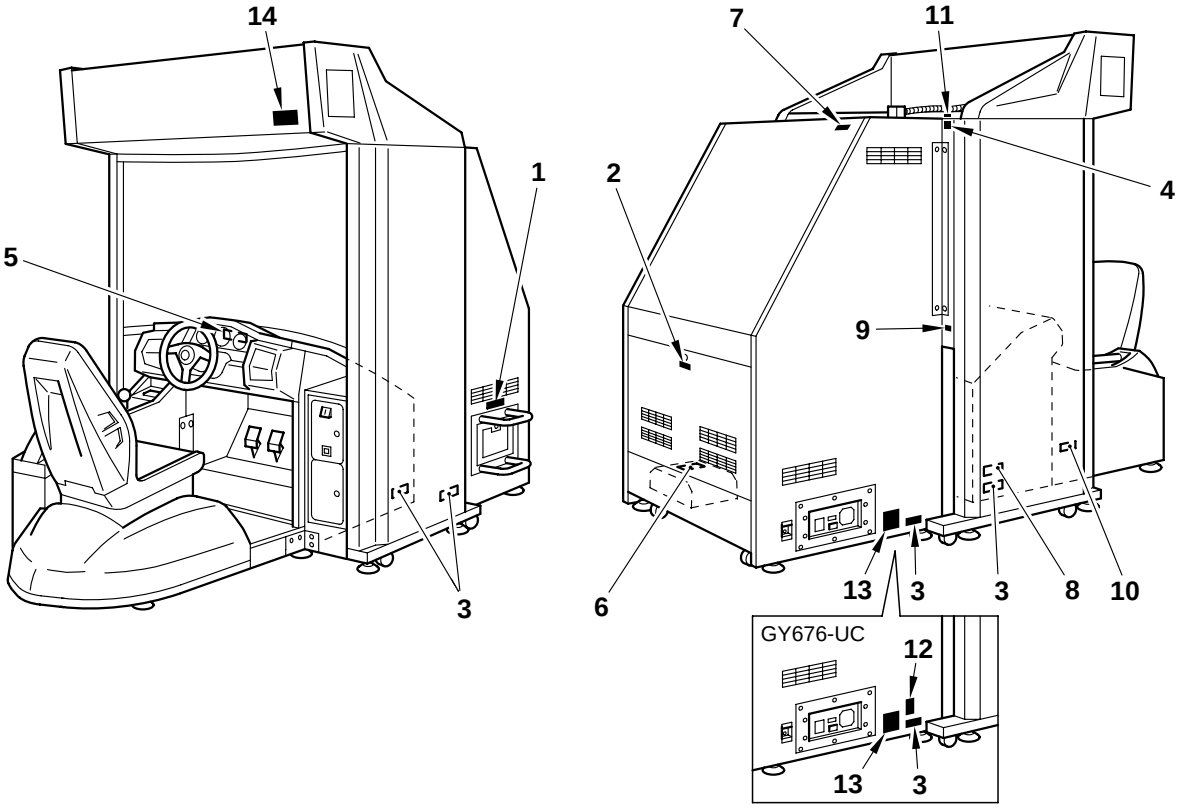


## ■警告標簽等的種類

1

**⚠ WARNING**

HEAT DANGER! DURING OPERATION, HOT AIR IS VENTED FROM THIS HOLE. DO NOT TOUCH OR PLACE ITEMS NEAR THE VENT.

PN.0000037216

2

**⚠ WARNING**

ELECTRICAL SHOCK HAZARD. DO NOT OPEN EXCEPT FOR SERVICE.

0000032450

3

**⚠ WARNING**

Ensure all leg levellers are securely set and game cabinet is level.

0000035350

4

**⚠ WARNING**

UNIT MAY FALL IF YOU PUSH OR TRUCK FROM THE WRONG SIDE. TO MOVE THE UNIT, PLEASE PUSH AS INDICATED IN THE PICTURE.

PN.0000037433

5

**⚠ HAZARDOUS VOLTAGE**

PN. 0000032445

6

**⚠ HIGH TEMPERATURE**

12

THIS EQUIPMENT COMPLIES WITH THE REQUIREMENTS IN PART 15 OF FCC RULES FOR A CLASS A COMPUTING DEVICE. OPERATION OF THIS EQUIPMENT IN A RESIDENTIAL AREA MAY CAUSE UNACCEPTABLE INTERFERENCE TO RADIO AND TV RECEPTION REQUIRING THE OPERATOR TO TAKE WHATEVER STEPS ARE NECESSARY TO CORRECT THE INTERFERENCE. THIS DEVICE MUST ACCEPT ANY INTERFERENCE RECEIVED, INCLUDING INTERFERENCE THAT MAY CAUSE UNDESIRED OPERATION.

KONAMI®

PN.0000032565

僅限 GY676-UC

13

| | |
|---|---|
| MODEL | GY676 RACING JAM |
| POWER | AC120 V / 60 Hz<br>850 W |
| MANUFACTURER | KONAMI CO., LTD. |
| DATE OF MANUFACTURE | october 1997 |
| WEIGHT | 490 Kg (1081 lb) |
| SERIAL NUMBER | |

KONAMI®
MADE IN JAPAN
PN.0000037437
INDOOR USE

・以上標注內容僅爲示例。不同輸出地區，其標注內容有所不同。

7 Weight 165kg(364lb)

8 Weight 115kg(254lb)

9 Weight 100kg(221lb)

10 Weight 80 kg(176lb)

11 Weight 30 kg( 66 lb)

14

Parental Advisory Warning

This game is classified

**SULITABLE FOR ALL AGES**

PN.0000032845

僅限 GY676-UC

CHINESE

# MEMO

CHINESE

# 1 規　格

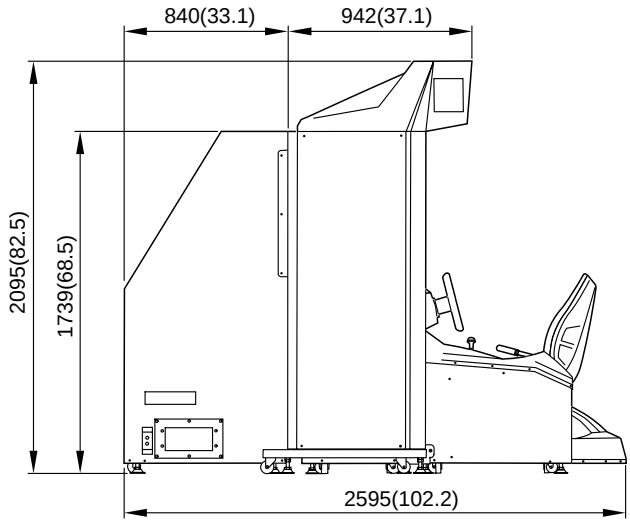


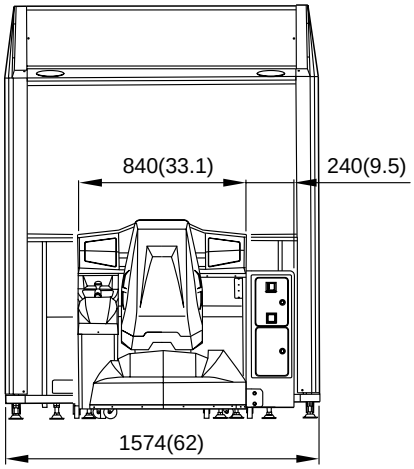


## 規　格

| | |
|---|---|
| 外形尺寸 | 參看上圖 : mm(in) |
| 重量 | 總重量:約490kg（1081lb）<br>投影裝置：約165kg（364lb）、屏幕裝置：約100kg（221lb）<br>座席裝置：約195kg（430lb）、標板裝置：約30kg（66lb） |
| 額定耗電量 | 850W |
| 顯示器 | 液晶投影裝置（屏幕畫面尺寸：70英寸寬長式） |
| 使用條件 | 溫度5～35℃（41～95℉）濕度20～80％（不得結露） |
| 附件 | ・使用説明書 …… 本書<br>・存幣箱鑰匙 …… 2<br>・維修用鑰匙 …… 2<br>・游戲PCB用預備保險絲（30A）…… 1<br>・裝置連接管 …… 1<br>・裝置連接管固定用螺栓（M5×20L）……12<br>・接頭金屬件 …… 2<br>・接頭金屬件安裝用螺絲（M6×20L）…… 4<br>・標板裝置安裝用螺絲（M8×30L）…… 3<br>・預備液晶投影機光源裝置…… 1<br>・電源軟線…… 1<br>・通信用纜線 …… 1<br>・編號標簽 …… 1<br>・液晶投影機鏡頭蓋…… 1<br>・投影機調整遙控器 …… 1<br>・投影裝置和屏幕裝置連接用螺栓（M8×30L）…… 4<br>・單三型干電池 …… 4 |

●萬一有不足零件或不良零件，請惠詢當地的經銷店。
●本機的規格因性能改良等理由而變更時，恕不預告。

CHINESE

# 2 Names of parts and list of main parts

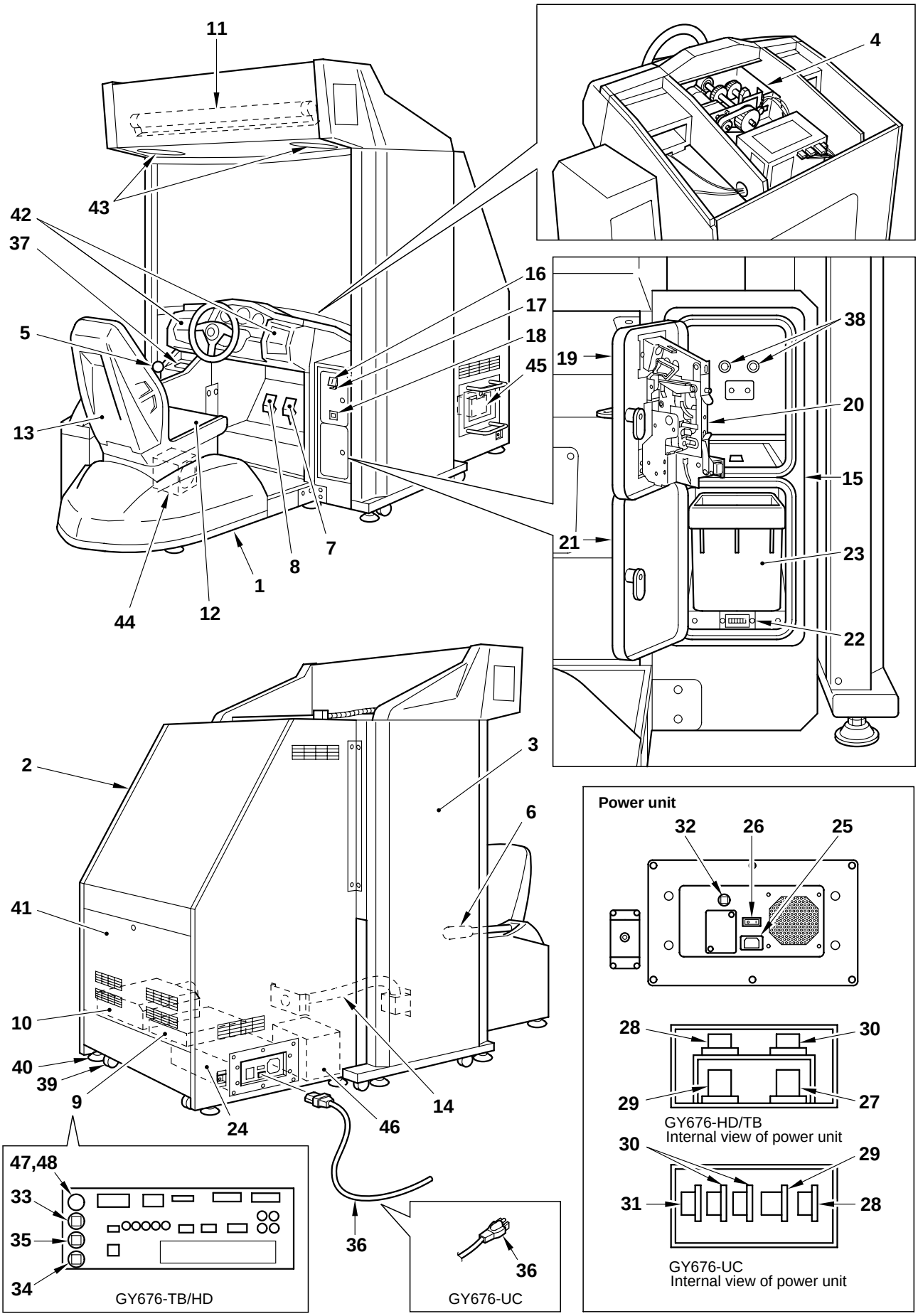

| No. | Part name | Part # | Quantity | Remarks |
|---|---|---|---|---|
| **1** | Cockpit unit | - | 1 | |
| **2** | Projector unit | - | 1 | |
| **3** | Screen unit | - | 1 | |
| **4** | Steering wheel unit | 0000043426 | 1 | |
| **5** | Shift unit | 0000039884 | 1 | |
| **6** | Hand brake unit | 0000043428 | 1 | |
| **7** | Pedal unit (acceleration and brake pedals) | 0000037120 | 1 | |
| **8** | Pedal unit (clutch pedal) | 0000037121 | 1 | |
| **9** | PCB unit | - | 1 | Include **33**, **34**, **35**, **47**, **48** |
| **10** | LCD projector | 0000035209 | 1 | |
| **11** | Fluorescent light assy | 0000036899 | 1 | |
| **12** | Seat | 0000037086 | 1 | |
| **13** | Seat cover | 0000037087 | 1 | |
| **14** | Unit connecting pipe | 0000037115 | 1 | |
| **15** | Coin door unit | 0000036914 | 1 | Include **16** to **21** GY676-HD |
| | | 0000036913 | 1 | Include **16** to **21** GY676-TB/UC |
| **16** | Coin input port | - | 1 | |
| **17** | Coin return lever | - | 1 | |
| **18** | Coin return port | - | 1 | |
| **19** | Maintenance door | - | 1 | |
| **20** | Coin selector | 0000036553 | 1 | GY676-HD |
| | | 0000036497 | 1 | GY676-TB/UC |
| **21** | Coin door | - | 1 | Excluding key |
| **22** | Coin counter | 0000030431 | 1 | |
| **23** | Coin box | 0000006850 | 1 | |
| **24** | Power unit | 0000043437 | 1 | Include **25** to **32** GY676-TB/HD |
| | | 0000043449 | 1 | Include **25** to **32** GY676-UC |
| **25** | Power inlet | 0000037224 | 1 | |
| **26** | Power switch | 0000039100 | 1 | |
| **27** | Switching Power A | 0000002489 | 1 | 12V 150W |
| **28** | Switching Power B | 0000036922 | 1 | 3.3V 150W |
| **29** | Switching Power C | 0000031054 | 1 | 5V 75W |
| **30** | Switching Power D | 0000003795 | 1 | 12V 100W GY676-TB/HD |
| | | 0000003795 | 2 | 12V 100W GY676-UC |
| **31** | Switching Power E | 0000031052 | 1 | 12V 50W GY676-UC only |
| **32** | Circuit protector | 0000036921 | 1 | 10A |
| **33** | Circuit protector | 0000032035 | 1 | 15A |
| **34** | Circuit protector | 0000034983 | 1 | 2A |
| **35** | Circuit protector | 0000034982 | 1 | 1A |
| **36** | AC power cord | 0000036692 | 1 | GY676-TB/HD |
| | | 0000036690 | 1 | GY676-UC (3P) |
| **37** | START button | 0000036916 | 1 | |
| **38** | Push-button switch | 0000005098 | 2 | |
| **39** | Caster | 0000001478 | 16 | |
| **40** | Adjuster | 0000003807 | 14 | |
| **41** | Back door | 0000037580 | 1 | |
| **42** | Speaker | 0000036900 | 2 | For cockpit unit |
| **43** | Speaker | 0000002616 | 2 | For billboard unit |
| **44** | Super woofer | 0000003182 | 1 | |
| **45** | LCD projector lamp unit | 0000036920 | 1 | |
| **46** | Transformer | 0000002707 | 1 | |
| **47** | Fuse holder | 0000035005 | 1 | |
| **48** | Fuse | 0000034984 | 1 | 30A |

## Steering wheel unit

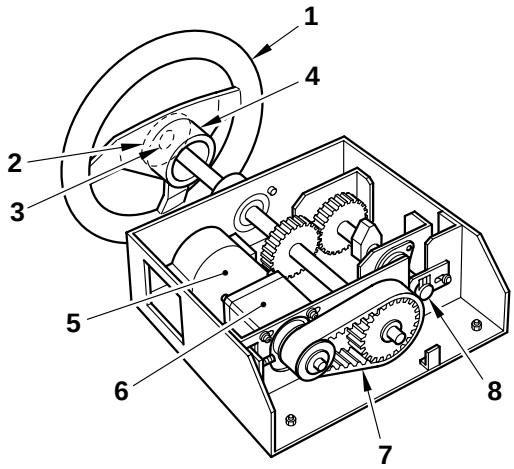


## Hand brake unit

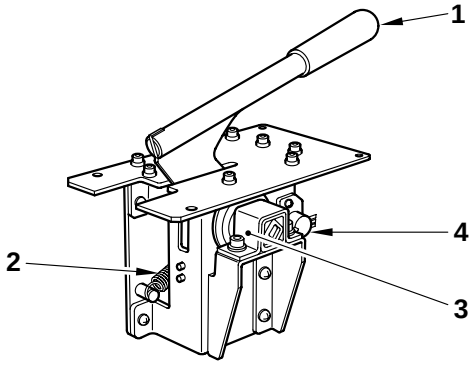


## Pedal unit (acceleration and brake pedals)

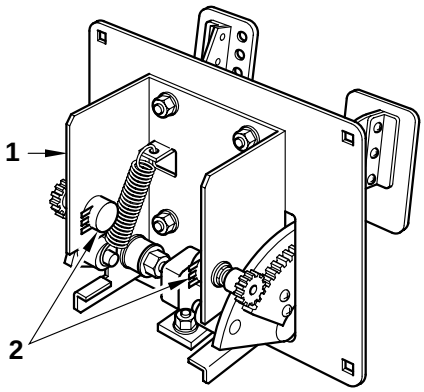


## Pedal unit (clutch pedal)

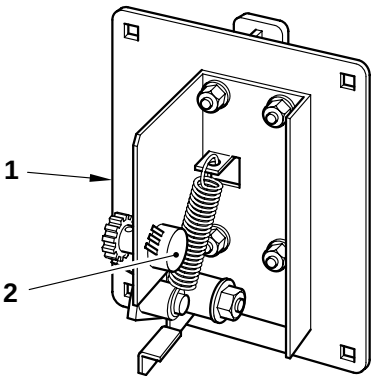


## Shift unit

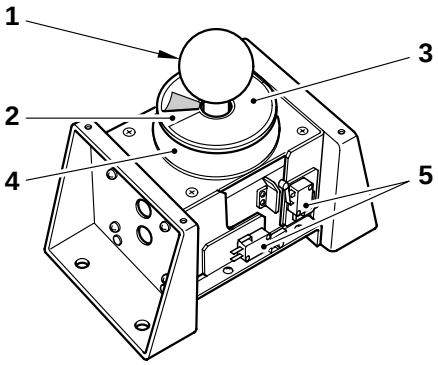

## Steering wheel unit

| No. | Part name | Part # | Quantity | Remarks |
|---|---|---|---|---|
| 1 | Steering wheel | 0000035211 | 1 | |
| 2 | Disk | 0000037013 | 1 | |
| 3 | Steering wheel ornament | 0000036802 | 1 | |
| 4 | Steering column boss | 0000037016 | 1 | |
| 5 | DC motor | 0000036918 | 1 | |
| 6 | Gear head | 0000036919 | 1 | |
| 7 | Timing belt | 0000036904 | 1 | |
| 8 | Potentiometer | 0000001723 | 1 | |

## Pedal unit (acceleration and brake pedals)

| No. | Part name | Part # | Quantity | Remarks |
|---|---|---|---|---|
| 1 | Pedal unit (acceleration and brake pedals) | 0000036930 | 1 | |
| 2 | Potentiometer | 0000001723 | 2 | |

## Pedal unit (clutch pedal)

| No. | Part name | Part # | Quantity | Remarks |
|---|---|---|---|---|
| 1 | Pedal unit (Clutch pedal) | 0000036931 | 1 | |
| 2 | Potentiometer | 0000001723 | 1 | |

## Hand brake unit

| No. | Part name | Part # | Quantity | Remarks |
|---|---|---|---|---|
| 1 | Grip | 0000036906 | 1 | |
| 2 | Coil spring | 0000003244 | 1 | |
| 3 | Rubber suspension | 0000036915 | 1 | |
| 4 | Potentiometer | 0000001723 | 1 | |

## Shift unit

| No. | Part name | Part # | Quantity | Remarks |
|---|---|---|---|---|
| 1 | Shift knob | 0000036911 | 1 | |
| 2 | Mask plate | 0000037080 | 1 | Clear |
| 3 | Mask plate sticker | 0000036806 | 1 | |
| 4 | Cover sheet | 0000037070 | 1 | Black |
| 5 | Microswitch | 0000036923 | 4 | |

# 3 How to play

The “RACING JAM™” is a real-world racing game. The wide, curved screen provides for unprecedented view, realism, and sense of speed. You can feel as if driving a real racing car. With your new driving experience in mind, the machine is equipped with many features: forced-feedback steering wheel, clutch, hand brake and 5 speeds plus reverse.
The full-scale race driving game also gives you the thrill of car racing such as drifting, counter-steering, load shift at cornering, spin turning and other actions.

## How to play

**1** Put a coin(s) in the slot.
The “COURSE SELECT” screen appears.

**2** Select one out of the following courses using the steering wheel.
Step on the acceleration pedal to enter the selection.

**•Course selection**

·Circuit courses ..... 2 courses
·Winding road courses ..... 2 courses
·Gymkhana courses ..... 4 courses

For details on the courses, refer to the next page.

**3** In the “CAR SELECT” screen, select one of the 18 different-performance machines in existence. Use the steering wheel to select a machine and step on the acceleration pedal to enter it.

**4** In the “TRANSMISSION SELECT” screen, choose from the automatic and manual operations. Use the steering wheel to select a type of transmission and step on the acceleration pedal to enter it.
When a circuit course or a winding course in the “COURSE SELECT” screen is selected, the “TRANSMISSION SELECT” screen shows up instead.

**•Transmission selection**

·Automatic operations ..... No shifting is needed during the play.
·Manual operations..... Shifting is needed. (The clutch pedal can be operated.)

**5** Set the machine in the “CAR SETTING” screen. Use the steering wheel to select a setup item and step on the acceleration pedal to enter it. When a gymkhana course in the “COURSE SELECT” screen is selected, the “CAR SETTING” screen shows up instead. In this screen, a type of transmission can be selected and a machine can be set to meet your racing style. (When “NO” is selected for a “Set-Up” item, the basic setting is resumed.)

**6** When all the above selections are made, their results are displayed on the screen. If there are two or more other communication players, the course will be decided by majority.
(Make the settings, referring to “NETWORK OPTIONS” on page 35)

## Joining the game halfway

You cannot join the “RACING JAM™” game halfway.

## Course selection

**•Circuit course racing**

·NIGHT (Beginner's course) ..... High-speed circuit course (partially with the opposite lane) in an urban district at night.

·DAY (Medium-level course) ..... Varied circuit course rich in ups and downs.

**•Winding road racing**

·Hill climb ..... Advanced-level closed circuit course up a mountain pass with continuous sharp hairpin curves. Advanced driving technique required.

·Downhill ..... Ultra-level closed circuit course down a mountain pass with continuous sharp hairpin curves. Super driving technique required.

**•Gymkhana racing (Network play is not possible.)**

The player is challenged to pass of markers along the course and reach the finish line within the play time. When the car runs the complete distance within the specified time, its lap time is displayed. If it fails to do it, "NO RECORD" is displayed instead. Two runs are allowed for one play. If the better time of the two runs is in the upper-then-fifth place, the player's name entry can be made. (Make this setting referring to "COURSE SETTINGS" on page 33)

·BEGINNER (Beginner's course) ..... For racing beginners.

·ADVANCED (Advanced-level course) .... For advanced-level race drivers. Advanced driving technique required.

·EXPERT (Ultra-level course) ..... For ultra-level race drivers. Super driving and positioning techniques required.

·OPEN ROAD (Training course) ..... Mode to lay out a course freely and to practice driving within a certain time.

# 4 Opening and closing the doors

## 4-1 Opening and closing the maintenance door

### How to open the maintenance door

- **Take care not to apply any load or impact to the maintenance door when it is open.**
- **After closing the maintenance door, be sure to check that the door is locked securely.**

**1** Insert the attached maintenance key in the maintenance door and turn it clockwise.

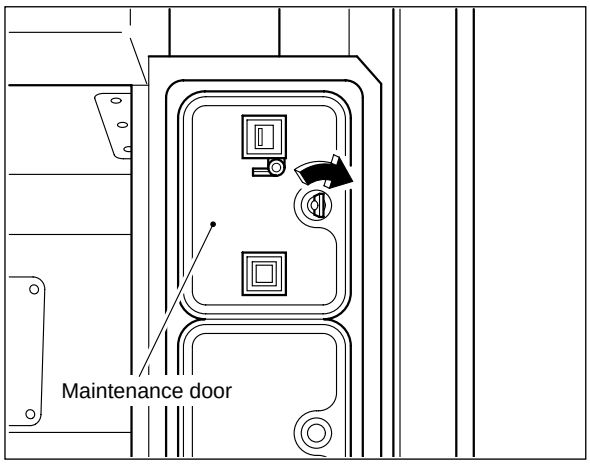


**2** Open the maintenance door.

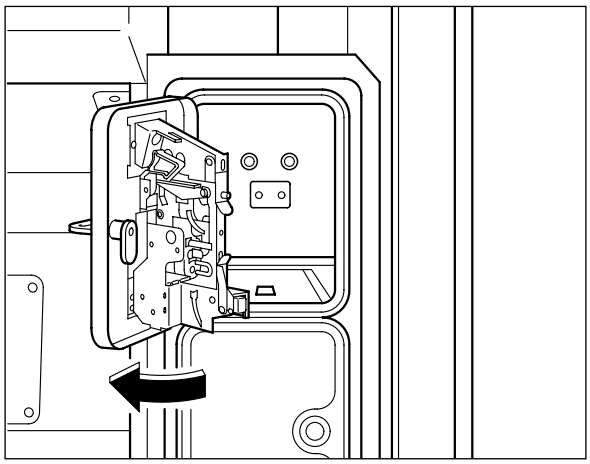

### How to close the maintenance door

**1** Close the maintenance door.

**2** Turn the maintenance key counterclockwise and draw it out.

# 4-2 Opening and closing the coin door

## Opening and closing the coin door and removing the coin box

**•Take care not to apply any load or impact to the coin door when it is open.**
**•Note that the coin box is considerably heavy to take out if it is full of coins.**
**•Securely lock the door for protection against burglaries.**

**1** Insert the attached coin door key in the coin door and turn it clockwise.

**2** Open the coin door and take out the coin box.

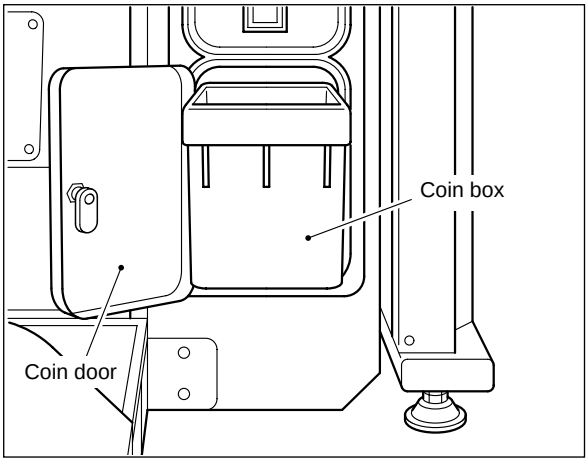


## Coin counter

You will find the coin box when the coin door is opened.
The coin counter is located under the coin box.

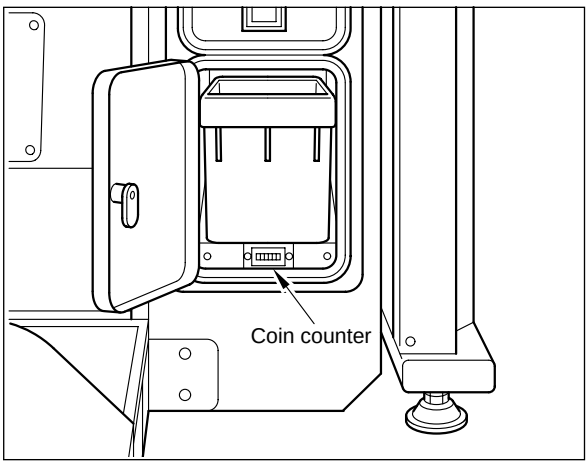

# 5 Networking game machines and PCB settings

## 5-1 How to networking

The specification of the game machine allow up to eight game machines to be connected so that players can enjoy versus games. To network, connect the networking cable supplied with each game machine to the network pin jack of the projector unit after setting up the game machines.

- **When using the game machine independently, do not connect anything to the pin jack for network connection.**
- **Game machines are linked together in a chain with the networking cables. Do not connect anything to the first and last pin jack for network connection in the chain.**
- **The network connection pin jack is dedicated to the "RACING JAM™" machine. Never use it for any other game machines and audio-visual equipment. Be sure to employ it to interconnect the same "RACING JAM™ " machines.**
- **Be sure to use the accompanying networking cable.**
- **When the networking cable has been connected, make the "NETWORK ID" setting (see "NETWORK OPTIONS" on page 35) and then check the setting in "NETWORK CHECK".**

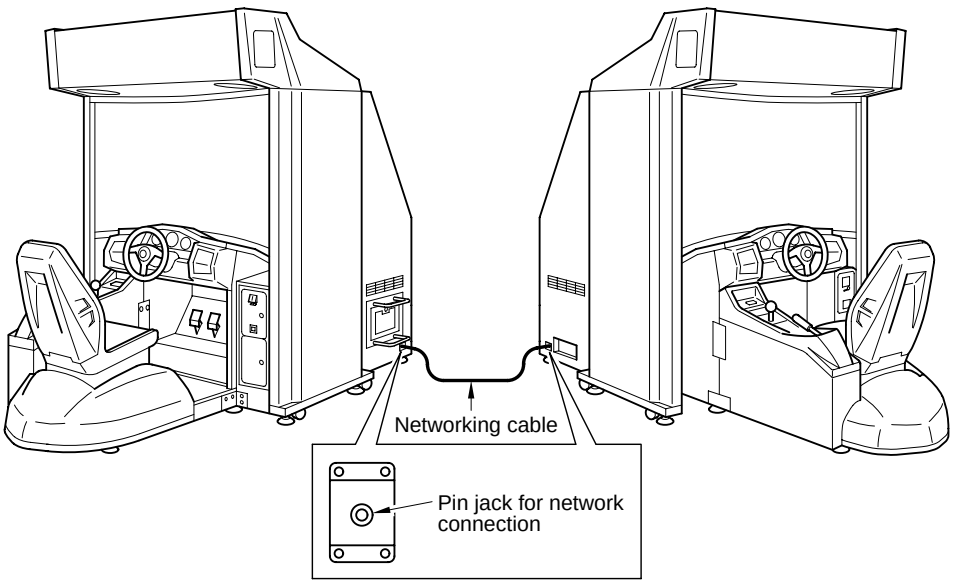


**Networking four game**

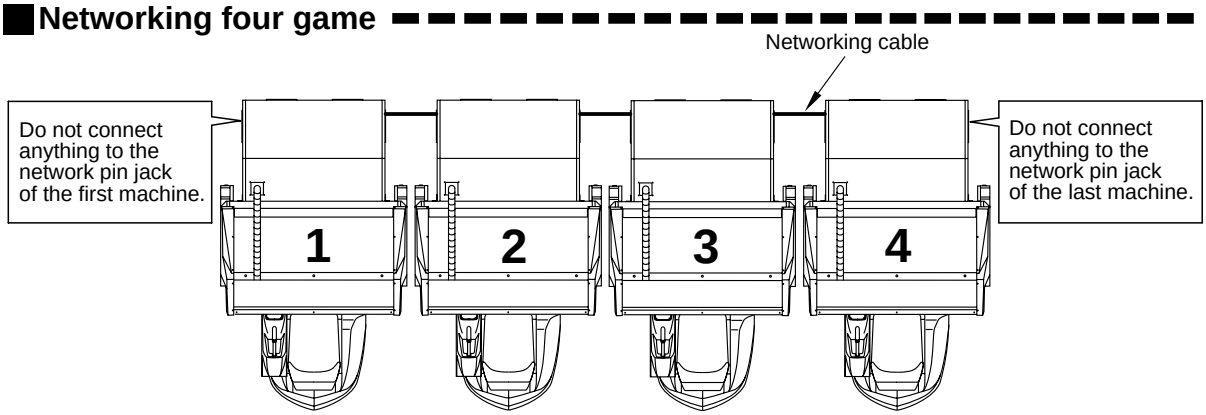

# 5-2 PCB start-up check (self test)

When the power switch is turned ON after installation of machine, the performance of game Printed Circuit Boards (PCB) is checked automatically and the result is displayed on the screen.

**•Be sure to check the PCB before using the machine.**
**•If an abnormality persists or the machine does not operate properly, immediately turn OFF the power switch, unplug the power cord from the receptacle and contact your nearest dealer.**

## Result of test

### If test is OK

· The steering wheel and other components are automatically repositioned. The machine then goes to the game mode and the demonstration game gets started.

### If any abnormality is detected

· " BAD " appears on the screen, and the checking is repeated.

If "OPTION SETTINGS BACKUP DATA ERROR." and "PRESS TEST SWITCH TO ALL FACTORY SETTINGS." appear, press the test switch on the service panel. (The settings made in the manual test will be back to the factory settings.)

If "RECORD BACKUP DATA ERROR." and "PRESS TEST SWITCH TO RECORD DATA CLEAR." appear, press the test switch on the service panel. (The course record will be back to the factory setting.)

If "BOOKKEEPING BACKUP DATA ERROR." and "PRESS TEST SWITCH TO DATA INITIALIZE." appear, press the test switch on the service panel. (The bookkeeping data will be back to the factory setting.)

After the installation of the machine, or after the repair or replacement of PCB. turn ON the power switch while pressing the test switch on the service panel and once return the settings to the factory settings.
If an abnormal display continues or the machine does not operate normally, immediately turn OFF the main power switch and contact your nearest dealer.

# 5-3 Correcting the positions of the steering wheel etc.

■ After the self-test, the positions of the steering wheel, hand brake, acceleration pedal, brake pedal and clutch pedal are corrected automatically.
At this time, the message “DO NOT TOUCH THE CONTROL DEVICE WHEN THE MACHINE IS BEING INITIALIZED.” appears on the screen. Never touch the steering wheel, hand brake, acceleration pedal, brake pedal and clutch pedal as long as this message stays on the screen. The steering wheel makes a few turns itself clockwise and counterclockwise.

■ **Result of position check**

**If test is OK**

•When the position check is over, the operation mode returns automatically to the game mode.

**If any abnormality is detected**

The result of check is displayed as follows on the screen.

**•Steering wheel abnormal**
The message “DEVICE ERROR (STEERING WHEEL)” appears on the screen.
What to do ..... The steering wheel control exceeds the correctable range or the steering wheel reaction device is out of order. Make the adjustment by referring to “7-5 Replacing and adjusting the potentiometer” in pages 55 and 56.

**•Hand brake abnormal**
The message “DEVICE ERROR (HAND BRAKE)” appears on the screen.
What to do ..... The hand brake control exceeds the correctable range. Make the adjustment by referring to “7-5 Replacing and adjusting the potentiometer” in pages 61 to 63.

**•Accelerator abnormal**
The message “DEVICE ERROR (ACCEL)” appears on the screen.
What to do ..... The accelerator control exceeds the correctable range. Make the adjustment by referring to “7-5 Replacing and adjusting the potentiometer” in pages 57 and 58.

**•Brake abnormal**
The message “DEVICE ERROR (BRAKE)” appears on the screen.
What to do ..... The brake control exceeds the correctable range. Make the adjustment by referring to “7-5 Replacing and adjusting the potentiometer” in pages 57 and 58.

**•Clutch abnormal**
The message “DEVICE ERROR (CLUTCH)” appears on the screen.
What to do ..... The clutch control exceeds the correctable range. Make the adjustment by referring to “7-5 Replacing and adjusting the potentiometer” in pages 59 and 60.

If any of the above signs is displayed, press the test switch on the service panel to go to the manual test mode. (The “MAIN MENU” screen shows up.) Then choose “I/O CHECK” to check the device which shows the error. If the “DEVICE ERROR (****)”is still displayed after the adjustment, the device itself may be in trouble. Immediately turn OFF the power switch, unplug the power cord and contact your nearest dealer.
If the “GAME MODE” is selected on the “MAIN MENU” screen with some troubles of any devices, the game may not be played normally.

If an abnormality persists or the machine does not operate properly, immediately turn OFF the power switch, unplug the power cord from the receptacle and contact your nearest dealer.

# 5-4 Adjusting the game environment (manual test)

Manually check the settings for the screen displays and game contents and change them as required.

## Starting the manual test mode

1 Turn ON the power switch.

2 Press the test switch on the service panel during the game mode demo (during the game mode demo of all the game machines in the case of networking) . (Turning ON the power switch while holding down the test switch will return all the present manual test settings to the original factory settings at the time of shipment.)

·The unit is set in the manual test mode and the main menu is displayed on the screen.

## Quit the manual test mode

1 Choose the “GAME MODE” from the main menu by the shift lever.

2 Press the START button.

·Then, the screen returns to game mode.

## Main menu screen (basic items)

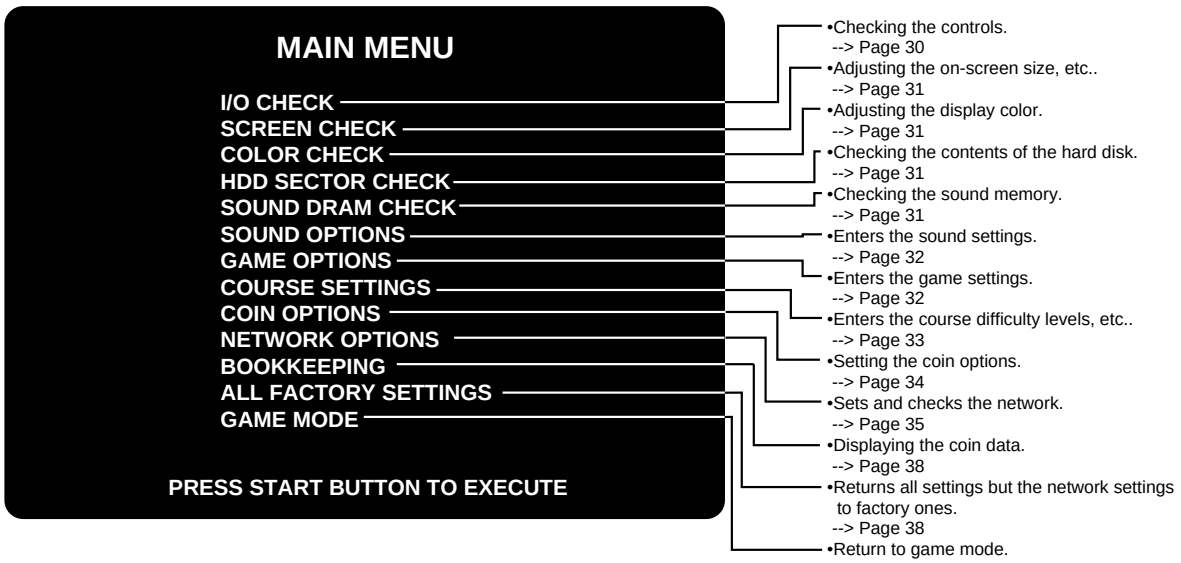


## Selecting each mode

How to select each mode from the main menu

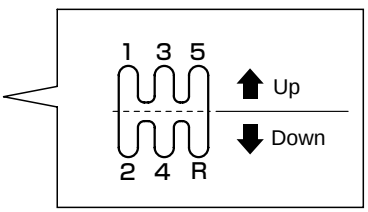


·SELECT --> Move the shift lever up (1, 3 or 5) or down (2, 4 or R).

·SET --> Press the START button.

•The machine is now in the seclected mode.

After selecting a mode, refer to the page on which that mode is described in details.

# 5-5 Mode descriptions

■ The original factory settings are displayed in green; the changed settings are displayed in red.

·To change the settings, move the shift lever up or down to select an item, and press the START button to enter it.

·After the setting change, select “SAVE AND EXIT” and press the START button. The settings are saved automatically and the screen returns to the main menu.

·If "EXIT" is selected after the modification of the settings, the following message will appear:
"YOU DID NOT SAVE. DO YOU WANT TO SAVE? YES / NO" Select "YES" or "NO" by shift lever up or down and set it by pressing the START button.
If "YES" is selected, the new settings will be saved with "NOW SAVING" displayed and the screen will return to the main menu.
If "NO" is selected, the new settings will not be saved with "NO MODIFICATION" displayed and the screen will return to the main menu.

•If "FACTORY SETTINGS" is selected and the START button is pressed, all the settings of the mode will be back to the factory ones.

**MEMO**

## I/O CHECK

**Checking the controls**

■ Mode for checking the performance each control.
To return to the main menu screen, hold down the START button and move up the shift lever.

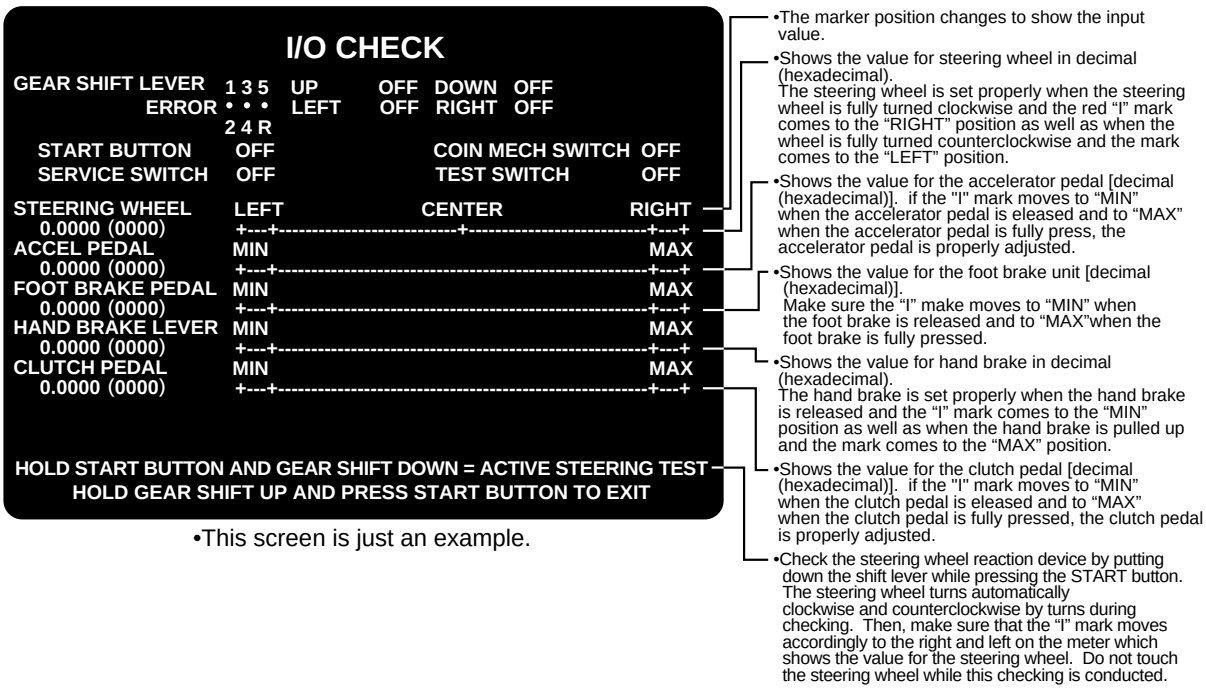


•This screen is just an example.

•If the steering wheel or the accelerator is not properly adjusted, make the necessary adjustments while referring to“7-5 Replacing and adjusting the potentiometer” on pages 55 to 63.

**MEMO**

## SCREEN CHECK

**Adjusting the on-screen size, etc.**

■Mode for checking the screen display.
Using the LCD projector, adjust the display size, display position and other factors so that the marks on the screen up to the screen edges. (See page 72)
To return to the main menu screen, press the START button.

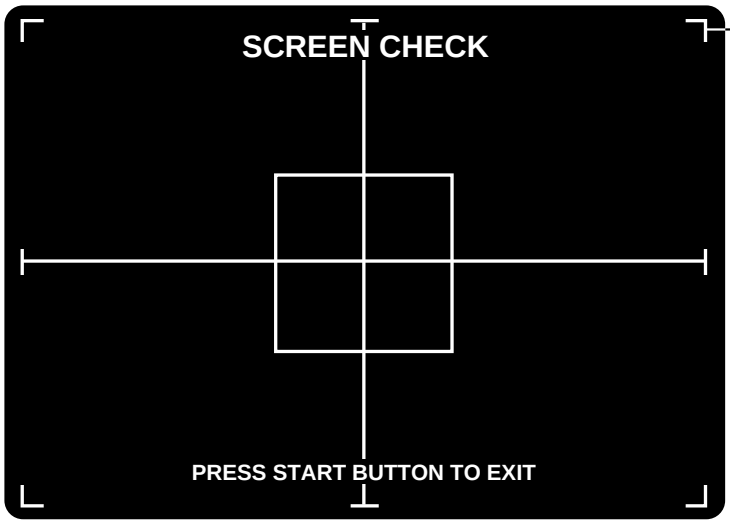


•Marks on the outer frame.

## COLOR CHECK

**Adjusting the display color**

■Mode for checking the display color.
Make the adjustment using the LCD projector adjusting remote controller (see page 72) so that the colors of the color bars should appear properly graduated and the background should become black sufficiently. To return to the main menu screen, press the START button.

## HDD SECTOR CHECK

**Checking the contents of the hard disk**

■The contents of the hard disk are checked automatically.
If they are normal, "OK" is displayed. If any abnormality is found, "BAD" appears with the No. of the defective sector displayed.
The check progress is displayed in percentage on the screen.
To return to the main menu. To cancel the checking halfway, press the START button. The main menu will automatically appear on the screen. If “BAD” appears on the screen, immediately turn OFF the power switch, unplug the power cord and contact your nearest dealer.

## SOUND DRAM CHECK

**Checking the sound memory**

■The sound memory is checked automatically.
By RAM part, “OK” is displayed if it is normal; “BAD” is displayed if abnormal.
To return to the main menu. To cancel the checking halfway, press the START button. The main menu will automatically appear on the screen.

# SOUND OPTIONS

**Enters the sound settings**

■ This screen is used to make sound settings and to check them.
Move the shift lever up or down to select an item, and press the START button to enter it. To return to the main menu, select “SAVE AND EXIT” or “EXIT” and press the START button.

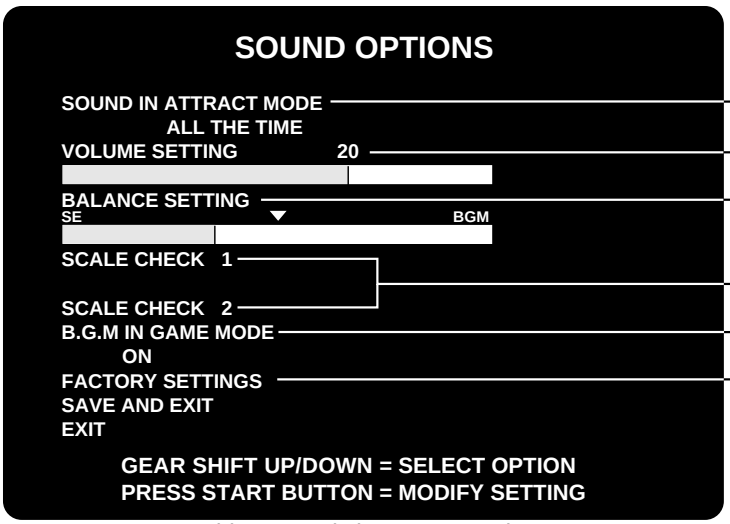


•This screen is just an example.

- •Turns on and off the demo play sound.
  - ·ALL THE TIME ..... Sound always on.
  - ·ONCE EVERY 4 CYCLES ..... Sound on every 4 cycles.
  - ·COMPLETE OFF …… Sound always off.
- •Adjusts the sound effect and other volume settings in steps from 0 (mute) to 30 (maximum).
  - ·To raise the sound level, hold down the START button and move up the shift lever.
  - ·To lower the sound level, hold down the START button and move down the shift lever.
- •When the factory settings have been resumed, turn OFF the power switch and turn it on again.
  - ·The “VOLUME SETTING” on the screen shows the factory-set level, but the actual sound level is an entry made before returning to the factory settings. The sound level may also be modified on this screen.
- •Sets the loundness balance between background music and sound effect.
  - ·To raise the volume of sound effect, hold down the START button and move up the shift lever.
  - ·To lower the volume of sound effect, hold down the START button and move down the shift lever.
- •You will hear a do-re-mi...do musical scale from the left speaker first and then from the right speaker, which is repeated twice. The second round is given acoustic echo. With SCALE CHECK 2, no sound effect is available.
- •Sets to give background music while the game is being played.
  - ·ON ..... Background music heard
  - ·OFF ... Background music not heard

  Background music only during the race. Not effective for demo-game background music, sound and other sound effects.
- •Returns all the settings to the factory settings.

# GAME OPTIONS

**Enters the game settings**

■ This screen is used to make game settings and to check them.
Move the shift lever up or down to select an item, and press the START button to enter it. To return to the main menu, select “SAVE AND EXIT” or “EXIT” and press the START button.

**•When networking the machines, be sure to set all the machines to the same settings.**

- •Selects the speed meter display [km/h] or [MPH].
- •Sets the return force of the steering wheel.
  - ·OFF ..... No return force
  - ·POWERLESS..... Weak
  - ·MEDIUM ..... Standard
  - ·POWERFULL ..... Strong
- •Saves a course record. Select "DISABLE" and the course record is not saved nor initialized.
- •In a network play with 4 or more cars, the first-place winner gets one bonus credit added.
- •Erases the ranking data.
- •Returns all the settings to the factory settings.

•This screen is just an example.

# COURSE SETTINGS

**Enters the course difficulty levels, etc. settings**

■ This screen is used to make course settings and their difficulty levels.
Move the shift lever up or down to select an item, and press the START button to enter it. To return to the main menu, select “SAVE AND EXIT” or “EXIT” and press the START button.

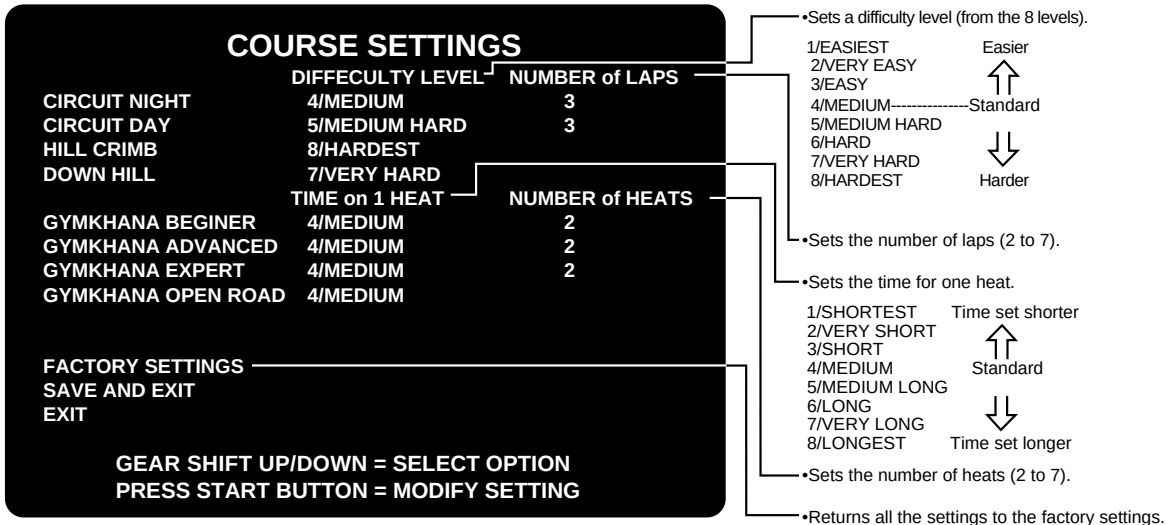


•This screen is just an example.

**MEMO**

•When the number of laps for a course has been set and saved, the course record of that course will be initialized.

# COIN OPTIONS

**Setting the coin options**

■ This screen is used to make coin settings and to check them.
Move the shift lever up or down to select an item, and press the START button to enter it. To return to the main menu, select “SAVE AND EXIT” or “EXIT” and press the START button.

**•Note that the coin setting options are not displayed when "FREE PLAY" is set to "YES".**

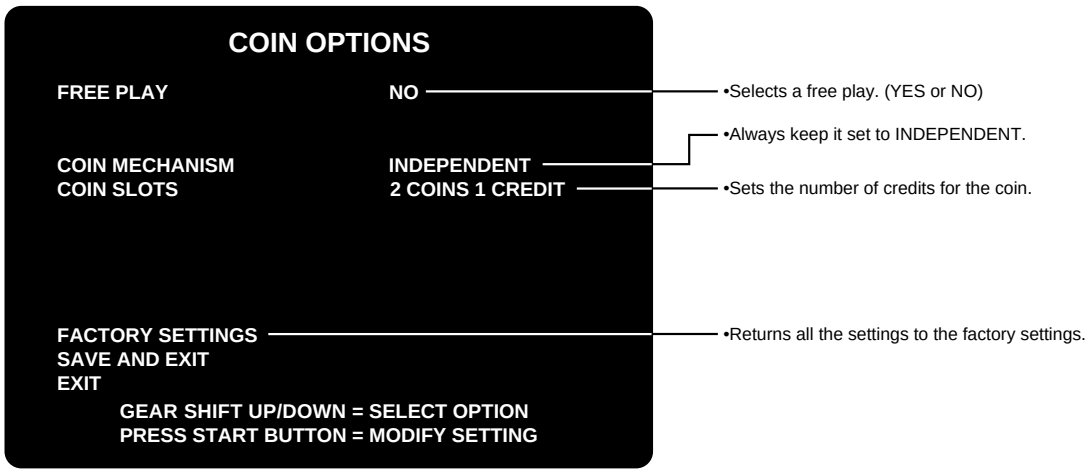


•This screen is just an example.

## ■ The relationship between the number of coins and the number of credits.

| SETTING | 1 | 2 | 3 | 4 | 5 | 6 | 7 | 8 | 9 | 10 | 11 | 12 | 13 | 14 | 15 | 16 | 17 | 18 | 19 | 20 |
|---|---|---|---|---|---|---|---|---|---|---|---|---|---|---|---|---|---|---|---|---|
| COIN(S) | 1 | 1 | 1 | 1 | 1 | 1 | 1 | 2 | 2 | 2 | 3 | 3 | 3 | 4 | 4 | 4 | 5 | 5 | 6 | 6 |
| CREDIT(S) | 1 | 2 | 3 | 4 | 5 | 6 | 7 | 1 | 3 | 5 | 1 | 2 | 4 | 1 | 3 | 5 | 1 | 2 | 1 | 5 |

| SETTING | 21 | 22 | 23 | 24 | 25 | 26 | 27 | 28 | 29 | 30 | 31 | 32 |
|---|---|---|---|---|---|---|---|---|---|---|---|---|
| COIN(S) | 7 | 7 | 8 | 8 | 9 | 10 | 11 | 12 | 13 | 14 | 15 | 16 |
| CREDIT(S) | 1 | 2 | 1 | 3 | 1 | 1 | 1 | 1 | 1 | 1 | 1 | 1 |

# NETWORK OPTIONS

**Sets and checks the network**

■ Sets and checks the network.
Move the shift lever up or down to select an item, and press the START button to enter it. To return to the main menu, select “SAVE AND EXIT” or “EXIT” and press the START button.

**NETWORK OPTIONS**

NETWORK ID
2
GAME JOINING PERIOD
12 counts
COURSE SELECTION
DECIDED by MAJORITY
NETWORK CHECK
NETWORK CONFIGURATION

FACTORY SETTINGS
SAVE AND EXIT
EXIT

GEAR SHIFT UP/DOWN = SELECT OPTION
PRESS START BUTTON = MODIFY SETTING

- •Sets a network ID. Enters different numbers (machine numbers) to the machines that will be networked. (Same numbers are not allowed.)
- •Sets the communication wait time. Choose from 4, 8, 12, 16, 20, 24, 28 and 32.
- •Sets the communication-play course decision by majority or by individual.
  ·DECIDED by MAJORITY...Course decided by majority
  ·DECIDED INDIVIDUALLY...Course not decided by majority
- •This mode is used to check the network condition. (See page 35)
- •This mode is used to automatically configure the settings of the networked machined.(See page 37)
- •Returns all the settings to the factory settings.

•This screen is just an example.

**NETWORK CHECK** select the following screen appears.

■ When networking the machines, be sure to check their networking status on this screen. To return to the “NETWORK OPTIONS” screen, press the START button.

- **•If any of the three items responds incorrectly, it indicates possible communication malfunction. Take measures while referring to “5-6 Measures to be taken when there is a network abnormality” on page 34.**
- **•If the machine still shows the same trouble or any troubles that are not discussed in this manual, immediately turn OFF the power switch, unplug the power cord and contact your nearest dealer.**

**NETWORK CHECK**

THIS BOARD-ID IS 8

| | ERROR | DOWN | STATUS |
|---|---|---|---|
| ID No.1 | 0 | 0 | DNC |
| ID No.2 | 0 | 0 | DNC |
| ID No.3 | 0 | 0 | I |
| ID No.4 | 0 | 0 | DNC |
| ID No.5 | 0 | 0 | I |
| ID No.6 | 0 | 0 | DNC |
| ID No.7 | 0 | 0 | DNC |
| ID No.8 | 0 | 0 | DNC |

PRESS START BUTTON = EXIT

- •Shows “Network ID” of the connected machine. (Number from 1 to 8)
- •The “I” mark is moving from left to right when the machine is networked.
- •“DNC” (Did Not Connect) appears if the machine is not networked.

•This screen is just an example.

**Check items (Watch the screen for longer than 1 minute and make sure the following 3 conditions are met.)**

·Check that the “I” mark in the STATUS column is moving from the left to the right at a fixed speed.
·Check that the value in the ERROR column is below “10” after one minute.
·Check that the value in the DOWN column does not change from “0”.

## Screen display when game machines are networked

### •Two game machines are networked

**Screen for player 1**

NETWORK CHECK

THIS BOARD-ID IS 1

| | | ERROR | DOWN | STATUS |
|---|---|---|---|---|
| ID | No.1 | 0 | 0 | I |
| ID | No.2 | 0 | 0 | I |
| ID | No.3 | 0 | 0 | DNC |
| ID | No.4 | 0 | 0 | DNC |
| ID | No.5 | 0 | 0 | DNC |
| ID | No.6 | 0 | 0 | DNC |
| ID | No.7 | 0 | 0 | DNC |
| ID | No.8 | 0 | 0 | DNC |

PRESS START BUTTON = EXIT

**Screen for player 2**

NETWORK CHECK

THIS BOARD-ID IS 2

| | | ERROR | DOWN | STATUS |
|---|---|---|---|---|
| ID | No.1 | 0 | 0 | I |
| ID | No.2 | 0 | 0 | I |
| ID | No.3 | 0 | 0 | DNC |
| ID | No.4 | 0 | 0 | DNC |
| ID | No.5 | 0 | 0 | DNC |
| ID | No.6 | 0 | 0 | DNC |
| ID | No.7 | 0 | 0 | DNC |
| ID | No.8 | 0 | 0 | DNC |

PRESS START BUTTON = EXIT

### •Four game machines are networked

**Screen for player 1**

NETWORK CHECK

THIS BOARD-ID IS 1

| | | ERROR | DOWN | STATUS |
|---|---|---|---|---|
| ID | No.1 | 0 | 0 | I |
| ID | No.2 | 0 | 0 | I |
| ID | No.3 | 0 | 0 | I |
| ID | No.4 | 0 | 0 | I |
| ID | No.5 | 0 | 0 | DNC |
| ID | No.6 | 0 | 0 | DNC |
| ID | No.7 | 0 | 0 | DNC |
| ID | No.8 | 0 | 0 | DNC |

PRESS START BUTTON = EXIT

**Screen for player 2**

NETWORK CHECK

THIS BOARD-ID IS 2

| | | ERROR | DOWN | STATUS |
|---|---|---|---|---|
| ID | No.1 | 0 | 0 | I |
| ID | No.2 | 0 | 0 | I |
| ID | No.3 | 0 | 0 | I |
| ID | No.4 | 0 | 0 | I |
| ID | No.5 | 0 | 0 | DNC |
| ID | No.6 | 0 | 0 | DNC |
| ID | No.7 | 0 | 0 | DNC |
| ID | No.8 | 0 | 0 | DNC |

PRESS START BUTTON = EXIT

**Screen for player 3**

NETWORK CHECK

THIS BOARD-ID IS 3

| | | ERROR | DOWN | STATUS |
|---|---|---|---|---|
| ID | No.1 | 0 | 0 | I |
| ID | No.2 | 0 | 0 | I |
| ID | No.3 | 0 | 0 | I |
| ID | No.4 | 0 | 0 | I |
| ID | No.5 | 0 | 0 | DNC |
| ID | No.6 | 0 | 0 | DNC |
| ID | No.7 | 0 | 0 | DNC |
| ID | No.8 | 0 | 0 | DNC |

PRESS START BUTTON = EXIT

**Screen for player 4**

NETWORK CHECK

THIS BOARD-ID IS 4

| | | ERROR | DOWN | STATUS |
|---|---|---|---|---|
| ID | No.1 | 0 | 0 | I |
| ID | No.2 | 0 | 0 | I |
| ID | No.3 | 0 | 0 | I |
| ID | No.4 | 0 | 0 | I |
| ID | No.5 | 0 | 0 | DNC |
| ID | No.6 | 0 | 0 | DNC |
| ID | No.7 | 0 | 0 | DNC |
| ID | No.8 | 0 | 0 | DNC |

PRESS START BUTTON = EXIT

•This screen is just an example.

## NETWORK CONFIGURATION

**Configuring various settings**

■ This mode is to automatically configure a group of already networked machines to the settings of a machine that has been connected to the group.
To return to the “NETWORK OPTIONS” screen, press the START button.

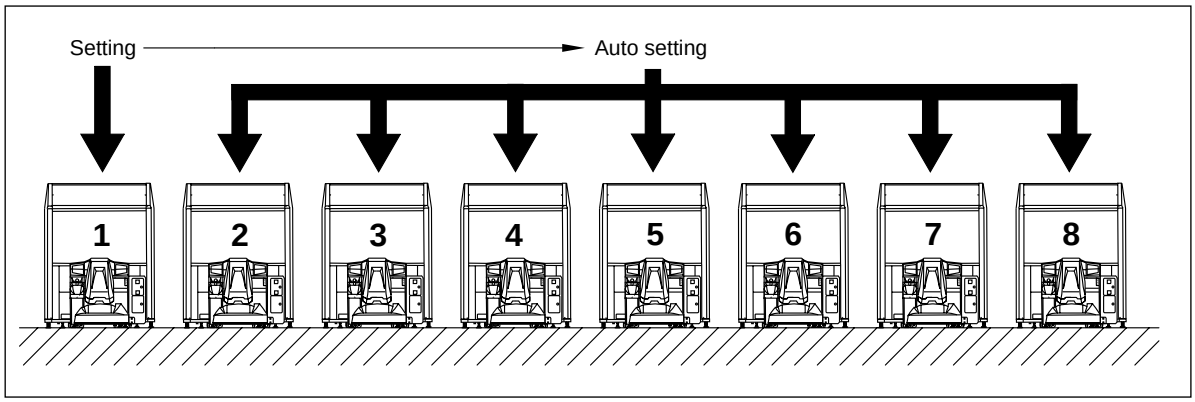


Setting modes which can be unified are as follow:

- “SOUND OPTIONS” (See page 32)
- “GAME OPTIONS” (See page 32)
- “COURSE SETTINGS” (See page 33)
- “COIN OPTIONS” (See page 34)

### ■ Organizing the machine settings being networked.

Take the following steps to configure the settings using the communication function.

**1**. Make sure the networking functions well in the “NETWORK CHECK” mode.

**2**. All the machines which are connected to the network are displayed on the “MAIN MENU” screen for the manual test.

**3**. Set “SOUND OPTIONS”, “GAME OPTIONS”, “COURSE SETTINGS” and “COIN OPTIONS” for only one set of machine among the others connected to the network. (Do not operate the other machines for setting.)

**4**. When the setting is finished, select the “NETWORK OPTIONS” from the “MAIN MENU” screen only for the machine for which the above setting **3** was made. Then select the “NETWORK CONFIGURATION” and press the START button. Make sure the message “PRESS TEST SWITCH TO START” appears on the screen. Press the test switch on the service panel of the machine. “CONFIGURATION START” appears on the screen instead.

**5**. Make sure all the other machines networked are automatically brought in the “NETWORK CONFIGURATION” mode. Then “COMPLETE” appears on the screen.

**6**. To return to the “NETWORK OPTIONS” screen, press the START button of the machine for which the above setting **3** was made. (For all the other machines, the “MAIN MENU” screen shows up.)

- If the network communication settings have not been made normally in the above steps **5** to **6**, make the same settings for all the machines one by one.
If the network play still fails, refer to pages 39 and 40.

**MEMO**

# BOOKKEEPING

**Displaying the coin data**

■ Mode for displaying the number of coins put into the machine.
If the time is preset in this mode, the following data on the number of coins put into the machine can be viewed by coin slot. To return to the main menu screen, press the START button.
To clear the data, move the shift lever to Position 3 and press the START button. When the date has been cleared, the time is reset to the Greenwich Mean Time. When "BOOKKEEPING" is selected next time, the time setting screen comes up.

**Time setting**

·When this item is selected after setting up the game machine, the time setting screen will appear. Pressing the START button after setting the time will save the setting. To cancel this mode, move the shift lever to Position 4 and press the START button.

• Once the time is set, this screen will not appear until the data is cleared. If the time setting is canceled, the data will not be collected.

**MEMO**

**BOOKKEEPING**

| | |
|---|---|
| ·TOTAL COINS | Total number of coins after the time being set |

**COIN DATA OF LAST 7DAYS**

| | |
|---|---|
| ·TODAY | Number of coins of today |
| ·YESTERDAY | Number of coins of yesterday |
| ··2DAY | Number of coins of 2 days ago |
| ··3DAY | Number of coins of 3 days ago |
| ··4DAY | Number of coins of 4 days ago |
| ··5DAY | Number of coins of 5 days ago |
| ··6DAY | Number of coins of 6 days ago |
| LAST 7DAYS AVERAGE | Average number of coins of last 7 days |

The data of the last 51 weeks are displayed by week average by moving right / left the shift lever.

# ALL FACTORY SETTING

**Returns all settings but the network settings to factory ones**

■ Mode for Returning all the settings to the factory settings.
In this mode, all the settings but the "BOOKKEEPING" settings on the main menu will be back to the factory ones. Now "DISABLE" is shown at the "COURSE RECORD SAVING" option in the "GAME OPTIONS" screen. Select "ENABLE" to initialize this setting. (See page 32.)

# 5-6 Measures to be taken when there is a network abnormality

If the “NETWORK ERROR” message appears, if any item responds incorrectly in the network communication check described on pages 35 and 36, or if the projector displays differ from the specified ones, take the following measures.

**•If the machine still shows the same trouble or any troubles that are not discussed in this manual, immediately turn OFF the power switch, unplug the power cord and contact your nearest dealer.**

| Symptom 1 | **The “NETWORK ERROR” message appears on the screen after the power is turned ON.** |
|---|---|

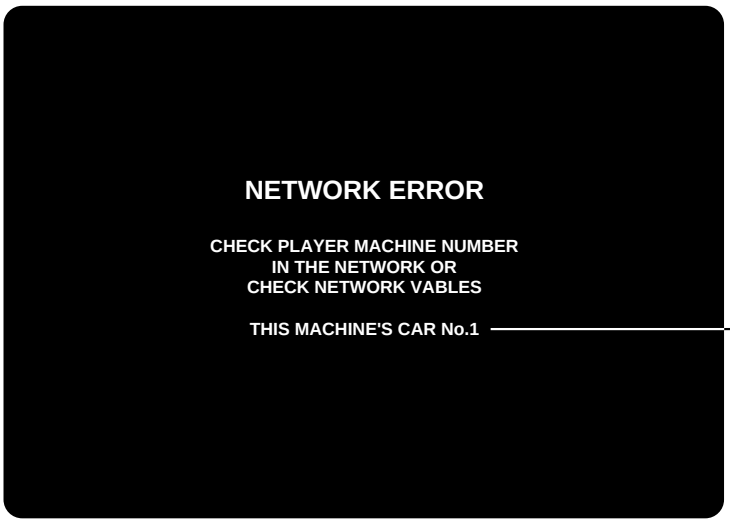


•Shows the “Network ID” of game machine. (A number for 1 to 8)

## Possible causes and measures to be taken

| Possible causes | Measures |
|---|---|
| •The “Network ID” settings are improper. | ·Readjust the “Network ID” settings on the “NETWORK OPTIONS” screen in the manual test mode. (See page 35) |
| •One of the networking cable used is disconnected from the game machne. | ·Properly connect the networking cable between the game machines. Make sure that the pin jacks that are not in use are free of dust or dirt. |
| •An unnecessary networking cable is connected with the pin jacks of the first and last machines. | ·Disconnect the network cable from those pin jacks. (See page 26) |

| Symptom 2 | The “NETWORK ERROR” message appears on the screen during playing. |
|---|---|

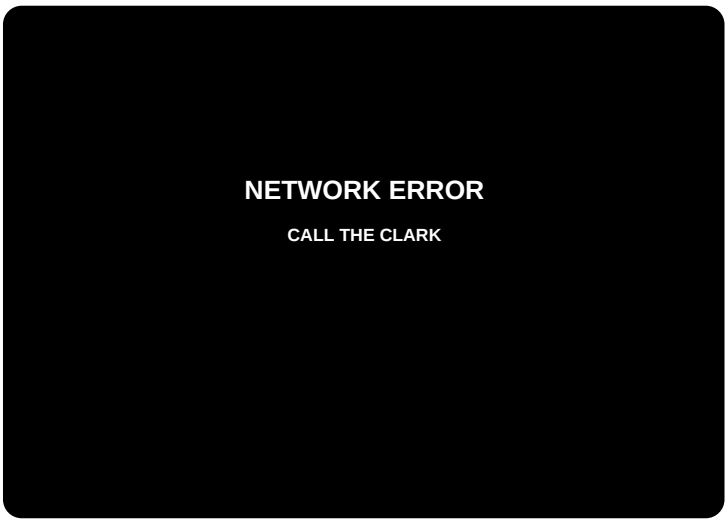


## Possible causes and measures to be taken

| Possible causes | Measures |
|---|---|
| •One of the networking cable has been disconnected from during play. | ·1.Turn OFF the power switch.<br>2.Connect the networking cable properly.<br>3.Turn ON the power switch. |
| •One of the networking cable has been internally broken or broken. | ·Replace the networking cable with the spare networking cable.<br>(You can also use commercially-sold video cable (75Ω3C-FV) having a length of 2m(78.74in) or less.) |
| •The test switch (on the service panel) of one of the networked game machines has been pressed.<br>**•The test switch should pressed during the game demo of all the networked game machines.** | ·1.Turn OFF the power switches of all the networked game machines.<br>2.Close the maintenance door.<br>3.Turn ON the power switches. |
| •Any of the networked machines has different settings. | ·Configure the settings of all the machines referring to “NETWORK CONFIGURATION” (see page 37). |

# 6 Setting up the game machine

## 6-1 Connecting the unit

### How to connect the unit

- **Before mounting the billboard unit, make sure that the adjusters of the projector unit and screen unit are tight on the floor.**
- **The billboard unit weighs about 30 kg (66lb). Be very careful in setting it up, making a team of 4 or more people and using stepladders or the like for added safety.**
- **Do not pull the wiring and connectors and the unit connecting pipe of the cockpit unit and projector unit to move them.**
- **When installing the connector cover, and connector plate take care not to catch the wiring.**

**1** Fit the projector unit and the screen unit to each other. Temporarily tighten the accompanying 4 projector unit / screen unit connection screws.

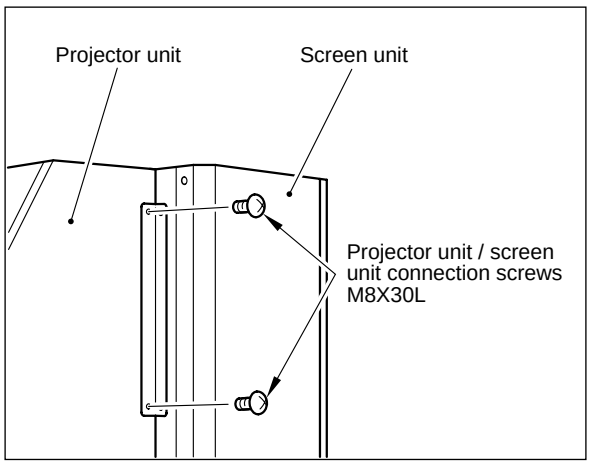


- If the screw holes are not aligned, loosen the 4 screws at the screen unit and reposition this unit. Tighten up these screws after the adjusters have been fixed (see “6-2 Fastening the adjusters” on page 44).

**MEMO**

**2** Referring to “6-2 Fastening the adjusters” on page 44, place the adjusters of the projector unit and screen unit tight on the floor.

**3** Using the accompanying joint fixture mounting screws, attach the accompanying joint fixtures to the billboard unit.

- To protect the billboard unit, spread a sheet of cloth or the like under it.

**MEMO**

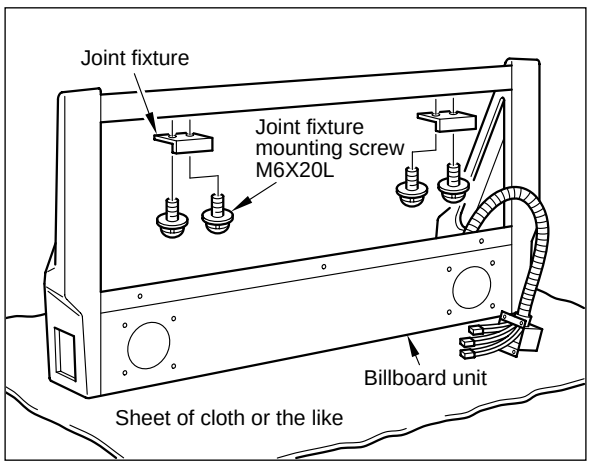

**4** Place the billboard unit on top of the screen unit.

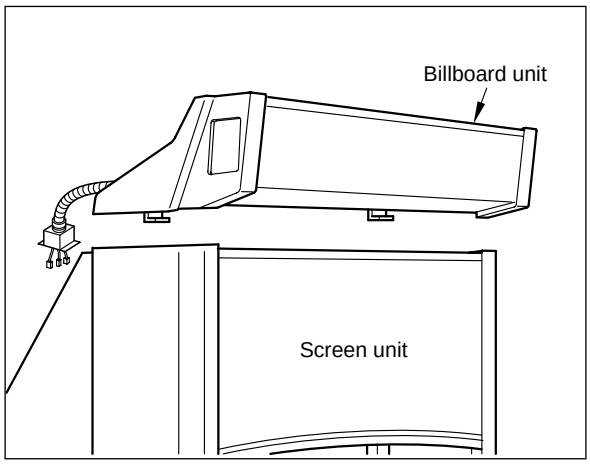


**5** Slide the billboard unit toward the front until the joint fixtures get hooked by the screen unit.

**6** Fix the billboard unit with the accompanying billboard unit mounting screws.

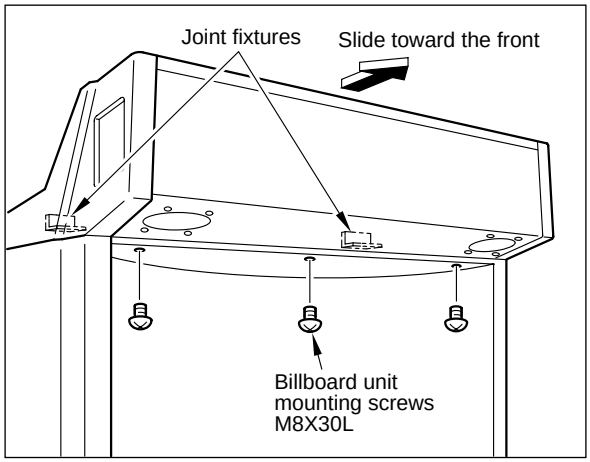


**7** Connect the connecting pipe from the back of the billboard unit to the connectors atop the projector unit. Fix the connector cover with the unit connecting pipe lock screws.

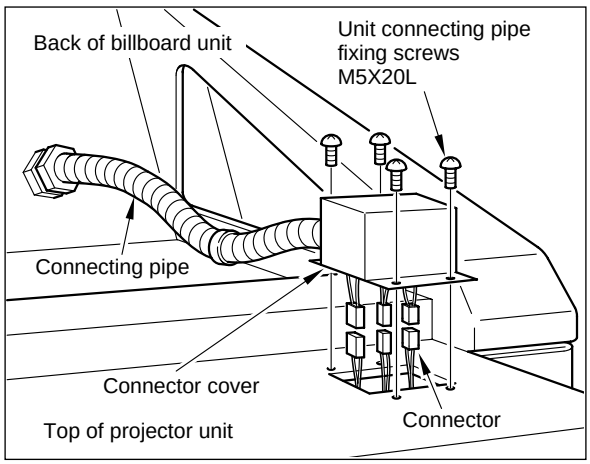


**8** Connect the unit connecting pipe to the connectors coming out of the bottom of the projector unit. Fix the connector plate with the accompanying unit connecting pipe lock screws.

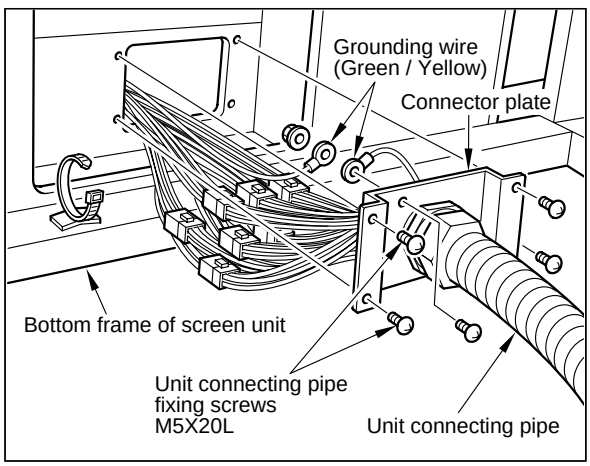


•Unscrew the screws on the connector plate and connect the grounding wire as illustrated below.

**MEMO**

**9** Fix the unit connecting pipe with the nylon band that is located at the bottom frame of the screen unit.

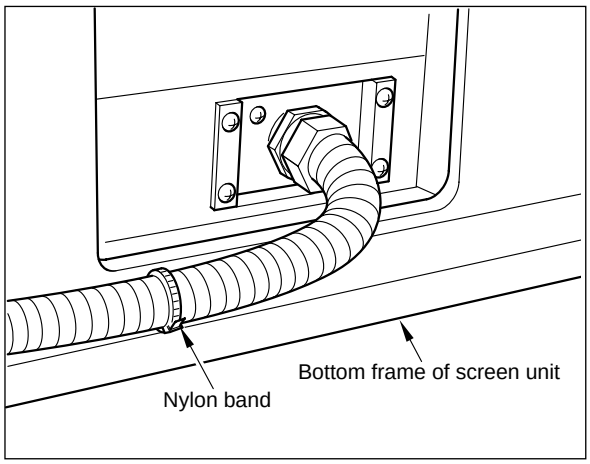


**10** Connect the other end of the unit connecting pipe (in Step **8** above) to the connectors coming out of the front of the cockpit unit. Fix the connector cover with the accompanying unit connecting pipe lock screws.

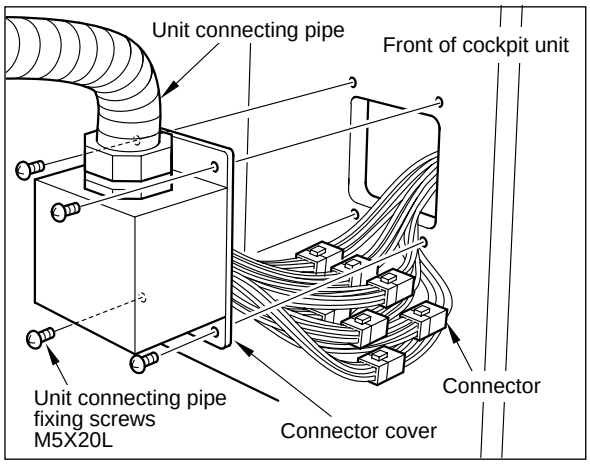


•Place the connector cover with the unit connecting pipe on the top as shown above.

**MEMO**

**11** Slowly push the cockpit unit along the center of the screen unit. Be careful not to get the unit connecting pipe caught between the cockpit unit and the screen unit.

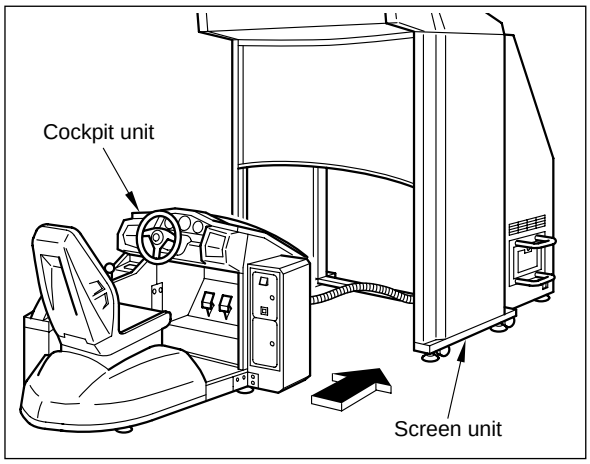

# 6-2 Fastening the adjusters

## How to fasten the adjusters

- **Adjust the adjusters so that the casters do not touch the floor. Take care not to exceed the maximum adjusting height of the adjuster.**
- **Adjust the 14 adjusters so that they are flush with the floor and make sure that the machine is stable and placed in a horizontal position. Then tighten up the hexagon nuts upward.**

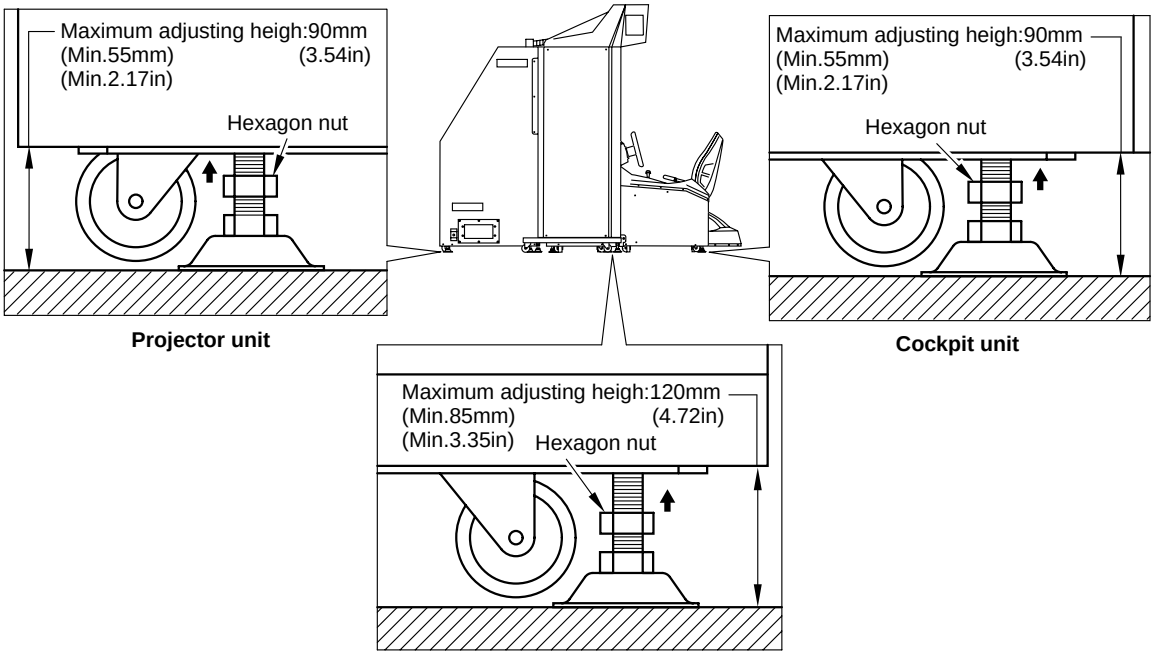

# 6-3 Power unit

The power unit is located on the left side of projector unit.

## Power unit

- **Be sure to use the attached AC power cord.**
- **Be sure to ground to the machine. Never connect the grounding wire to gas pipe, water pipe or telephone ground terminal.**

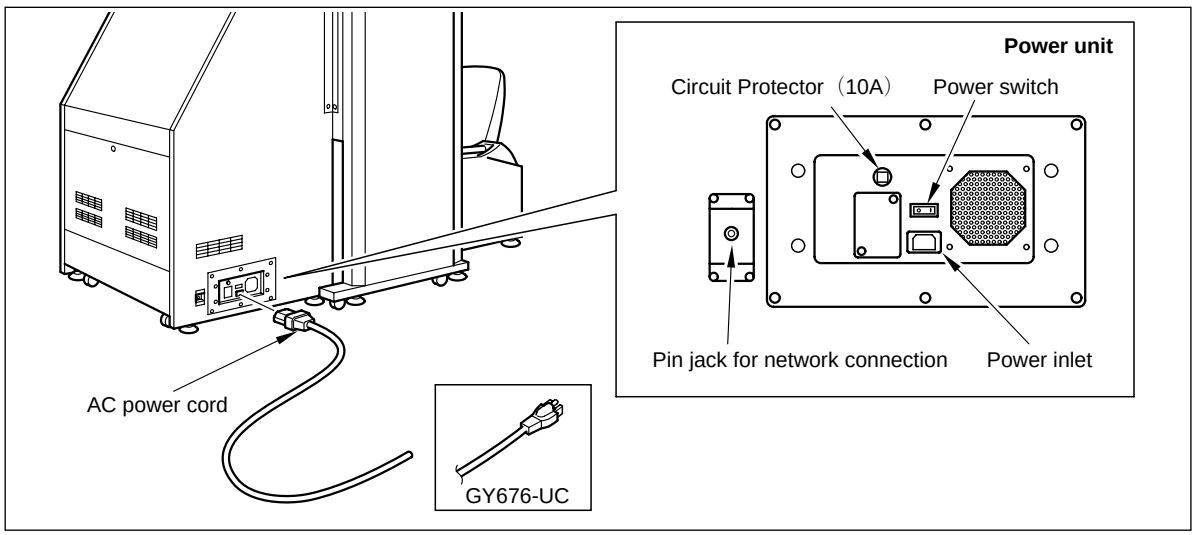


# 6-4 Service panel

You will find the service panel when the maintenance door is opened with the attached maintenance key.

## Service panel

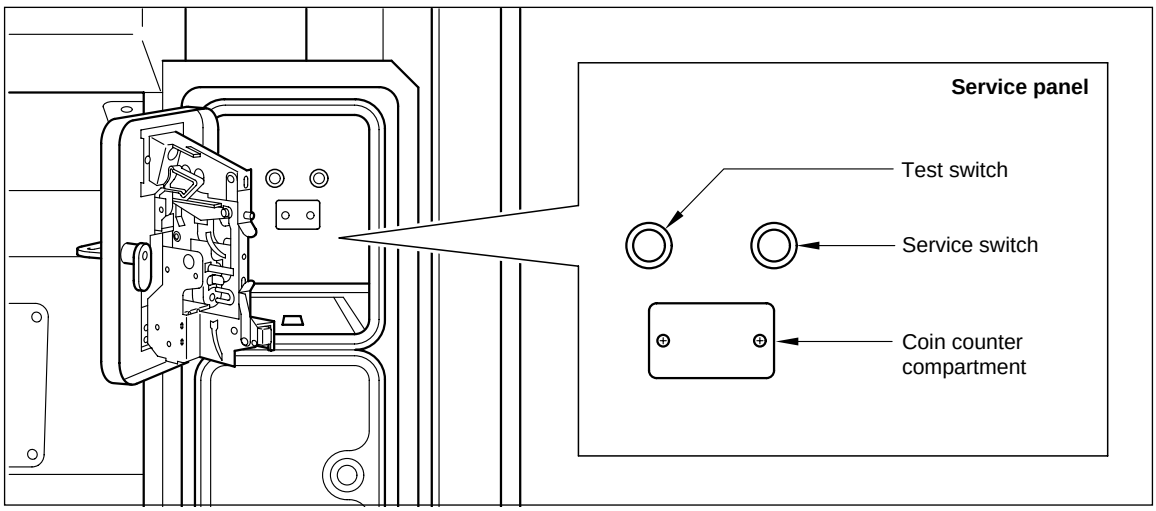

# 6-5 Separating and moving the units

The machine can be divided into the units.

## ■How to separate the units

- **Before separating the units from the machine, be sure to turn OFF the power switch and remove the power cord plug from the receptacle.**
- **When moving the machine, be sure to separate the cockpit unit, screen unit and projector unit beforehand.**
- **Do not pull the unit connecting pipe of connector cover to move the unit.**
- **When connecting the separated units, take care not to catch the wiring and your hand between the units.**

## ■Separating the cockpit unit and the screen unit

**1** Loosen the adjusters of the cockpit unit. Pull out the unit a little.

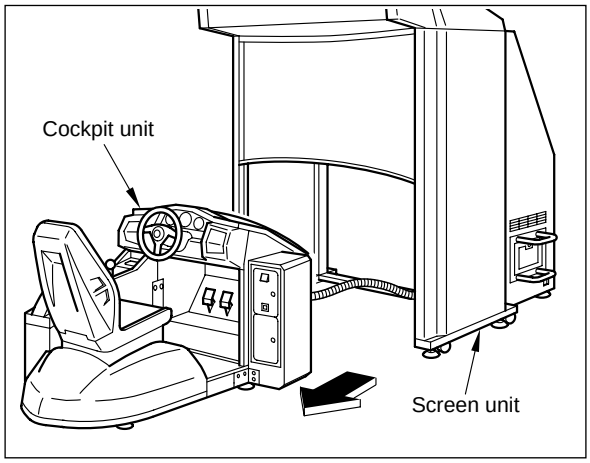


**2** Remove the connector cover from the cockpit unit. Disconnect all the connectors.

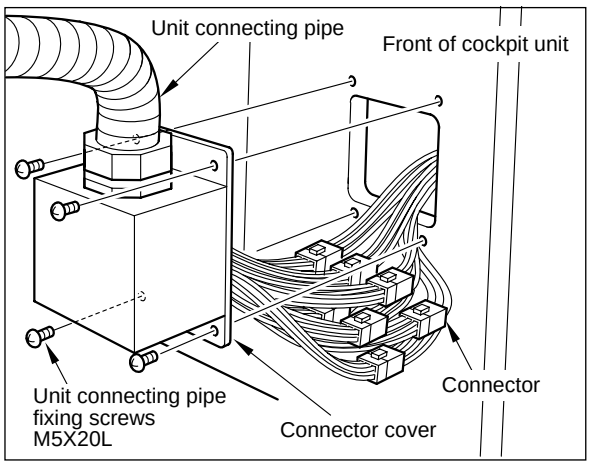

**3** **To disconnect the unit connecting pipe**
Undo the nylon band (at the bottom frame of the screen unit) from the unit connecting pipe.

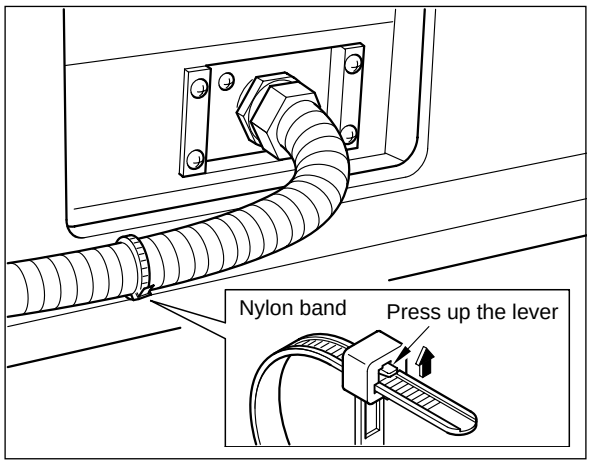


**4** Remove the connector plate from the screen unit. Disconnect all the connectors.

•Disconnect the grounding wire.
**MEMO**

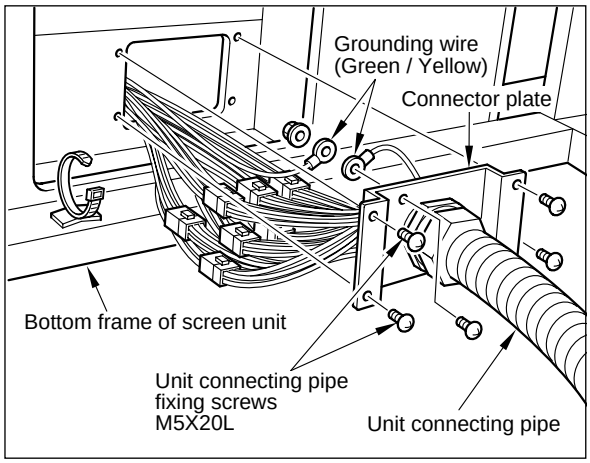


**5** **To separate the screen unit and the projector unit**
Remove the connector cover from the top of the projector unit.
Disconnect all the connectors.

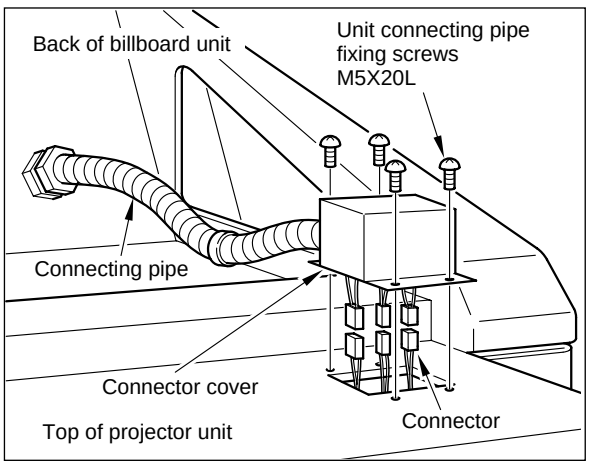


**6** Remove the 4 screws from the projector unit.

**7** Loosen the 8 adjusters and move the units on the castors.

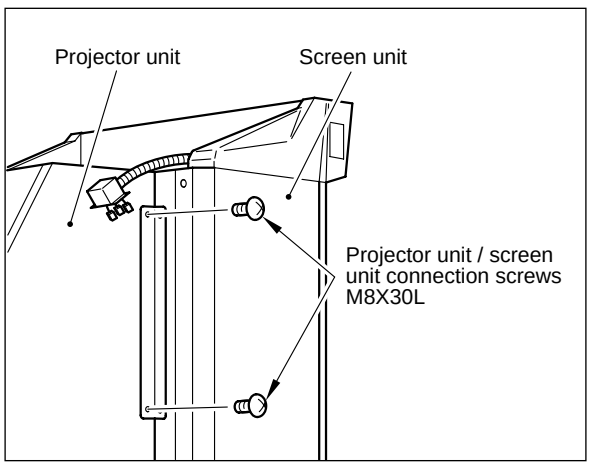

## How to separate the cockpit unit

Be sure to pull out the cockpit unit first, referring to pages 46 and 47.

**•Before separating the units, be sure to turn OFF the power switch and unplug the power cord from the receptacle.**
**•When reconnecting the cockpit unit, be very careful not to get your hands and the wiring caught.**

**1** Loosen the joint fixture screws at the steering wheel. Remove the screws from the seat.

**Right side of cockpit unit**

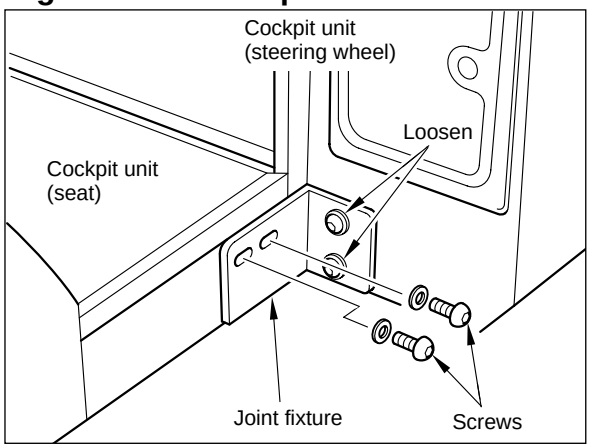


**Left side of cockpit unit**

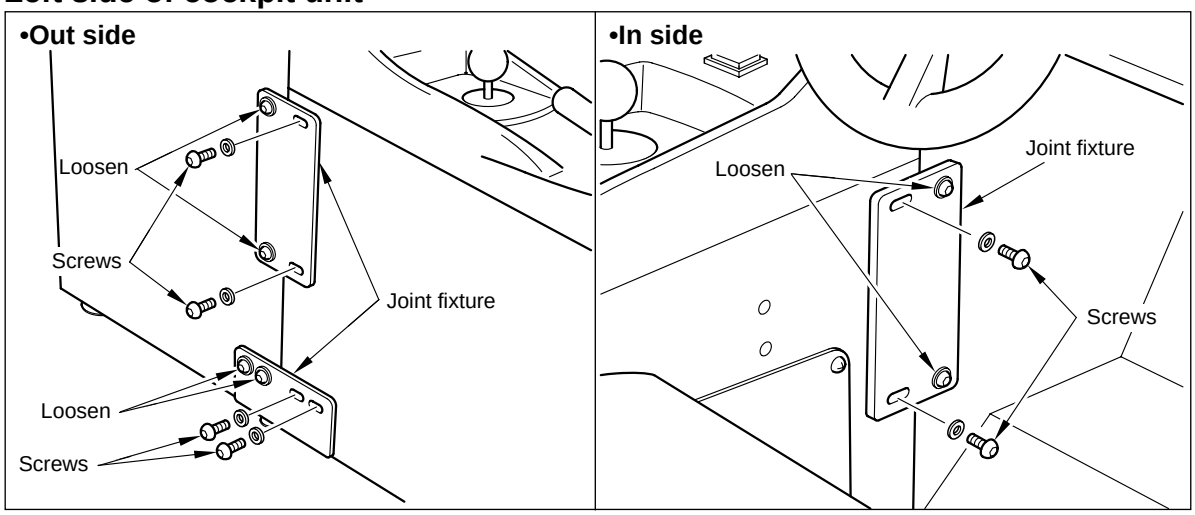


**2** Separate the steering wheel and the seat a little from each other. Disconnect the connectors.

**3** To reconnect the cockpit unit, take the reverse steps.

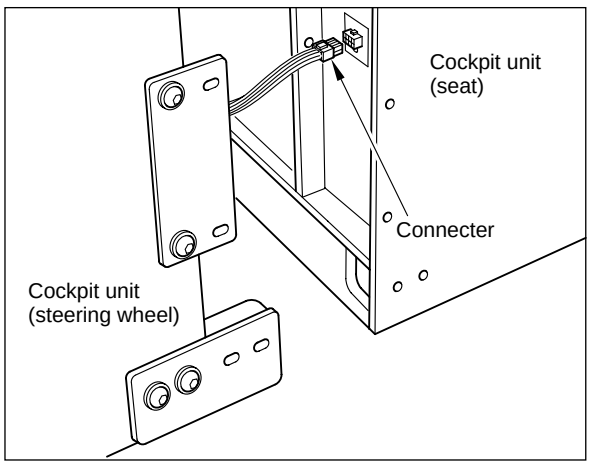

## Separating the billboard unit and the screen unit

- **Before separating the billboard unit, be sure to turn OFF the power switch and unplug the power cord from the receptacle.**
- **Before detaching the billboard unit, make sure the adjusters of the projector unit and screen unit are tight on the floor.**
- **The billboard unit weighs about 30 kg (66lb). Be sure to make a team of 4 people or more and to use stepladders or the like for added safety.**
- **When reconnecting the billboard unit, be very careful not to get your hands and the wiring caught.**

**1** Remove the connector cover from the top of the projector unit. Disconnect the connectors.

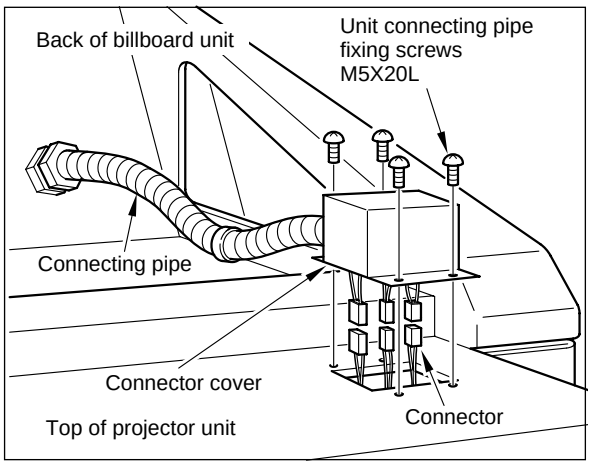


**2** Remove the screws off the billboard unit. Slide backward and unhook the billboard unit.

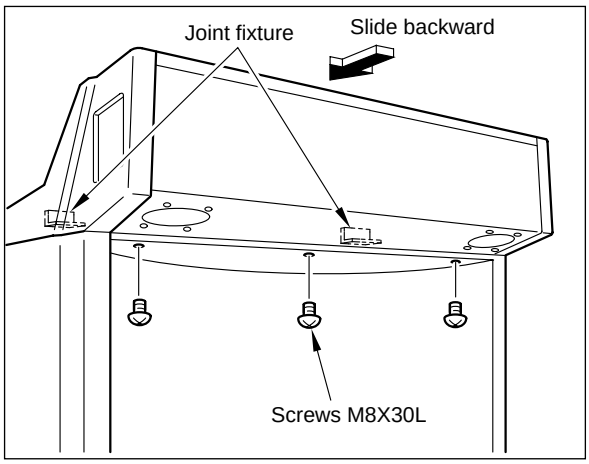


**3** Make sure the billboard unit is unhooked. Lift it upward and take it away.

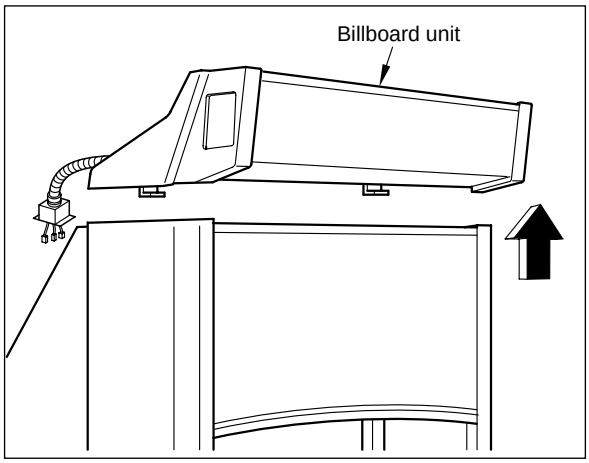

# 6-6 Moving the coin counter

The coin counter was installed in the coin box when the machine left the factory, but it can be moved onto the service panel.

## How to move the coin counter

**•Before moving the coin counter, be sure to turn OFF the power switch and unplug the power cord from the receptacle.**

**1** Separate the cockpit unit and the screen unit, referring back to page 46.

**2** Open the coin door, remove the screws, pull out the coin counter, and disconnect the connector.

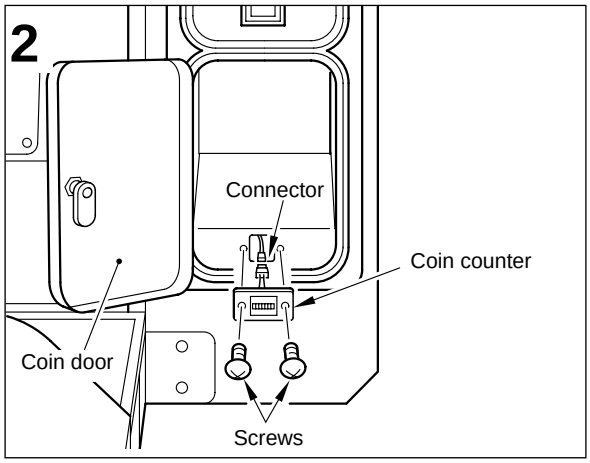


**3** Open the maintenance door and remove the blind cover off the service panel.

**4** Draw the connector out of the opening for coin counter and connect this connector to the coin counter connector.

**5** Attach the coin counter on the service panel.

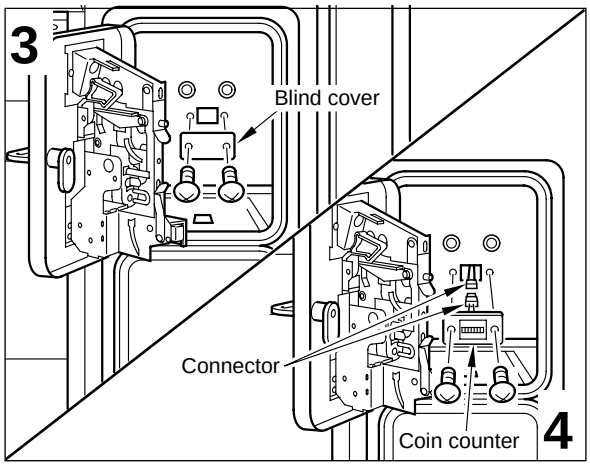

# 7 Maintenance and annex

## 7-1 Replacing the coin selector

### How to replace the coin selector

**•Before replacing the coin selector, be sure to turn OFF the power switch and unplug the power cord from the receptacle.**

**1** Open the maintenance door.

**2** Release the levers that fix the coin selector. See at right.

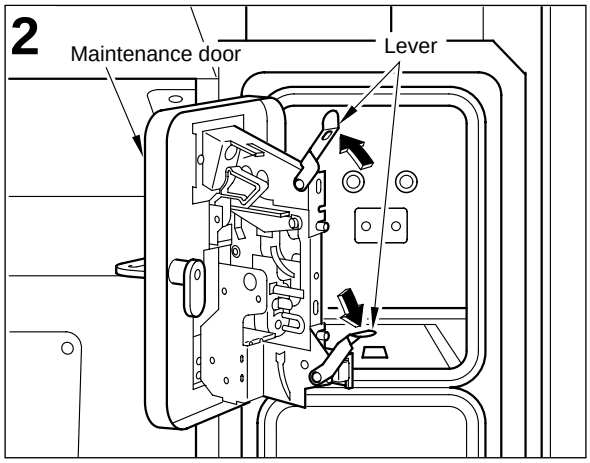


**3** Slide the coin selector to the right, and take it out.

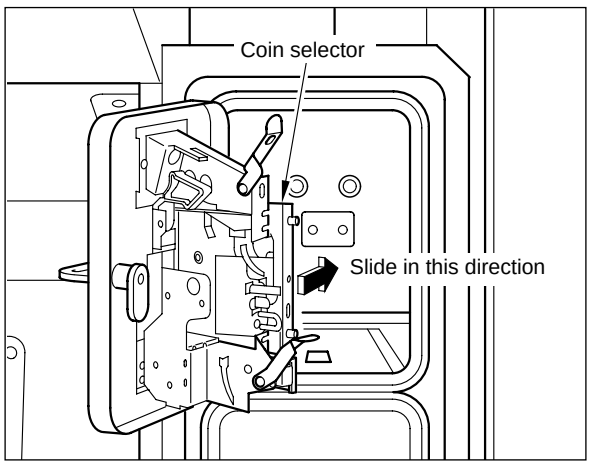


**4** **To reattach the coin selector**
Hold up the white lever and fit the 2 projections of the coin selector to their mating notches.

**5** Lock the levers (in Step **2** above) again, and close the maintenance door.

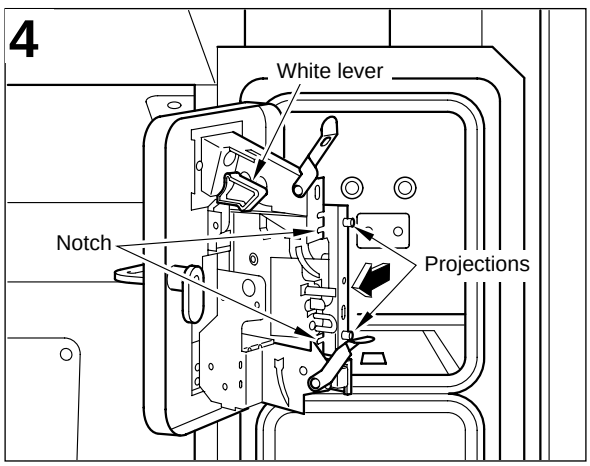

# 7-2 Replacing the fluorescent light

## How to replace the fluorescent light

**•Before replacing the fluorescent light, be sure to turn OFF the power switch and unplug the power cord from the receptacle.**
**•The fluorescent light is hot just after it is put off. Wait until it cools down and then replace it with a new one of the same type (straight tube 40W/100V).**

**1** Remove the screws from the top of the billboard unit. Flip up the billboard panel holder.

**2** Remove the screws that fix the billboard panel.

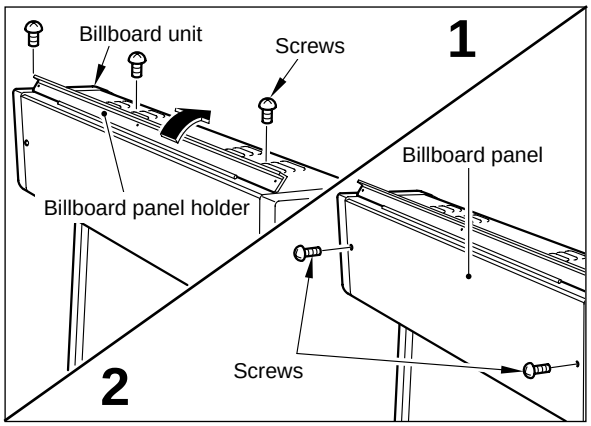


**3** Draw out the billboard panel upward.

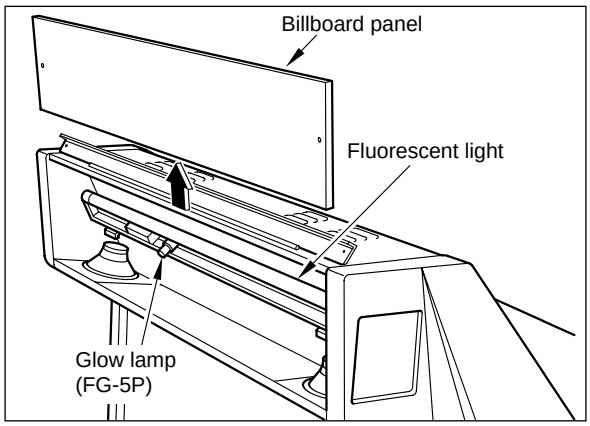


**4** Push one end of the fluorescent light in the direction of the socket. The other end of the fluorescent light will be detached from the opposite socket.

**5** Install a new fluorescent light in the reverse order.

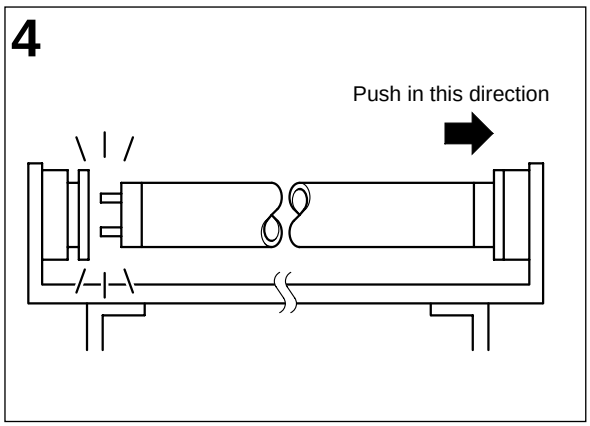


•It is recommended that the glow lamp should be also replaced.

**MEMO**

# 7-3 Replacing the LCD projector lamp unit

The LCD projector lamp unit has a service life of about 2000 operating hours. Replace the lamp unit with new one. Too old lamp unit will produce dim images and poor color tints.

## How to replace the LCD projector lamp unit

- **Before replacing the LCD projector lamp unit, be sure to turn OFF the power switch and unplug the power cord from the receptacle.**
- **The radiation cover and the LCD projector lamp unit are still hot even after the power is turned off. Wait long enough until they cool down.**
- **Be sure to use the specified LCD projector lamp unit.**

**1** Using the maintenance key, detach the radiation cover from the side of the projector unit.

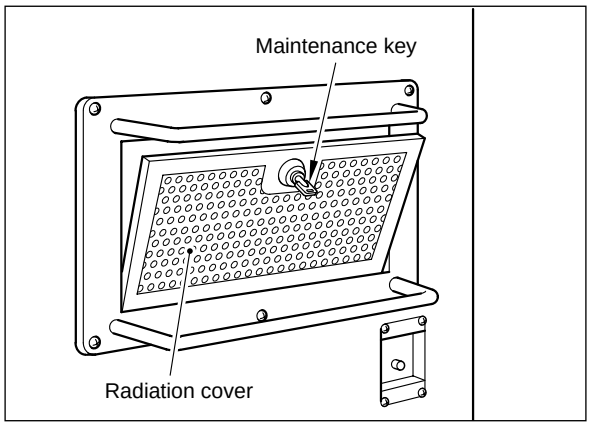


**2** Loosen the screw and remove the LCD projector lamp unit cover.

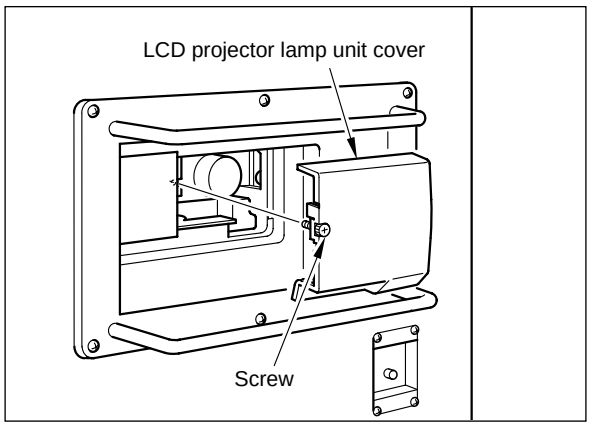


**3** Remove the screws and take out the LCD projector lamp unit.

**4** To reattach the LCD projector lamp unit, take the reverse steps.

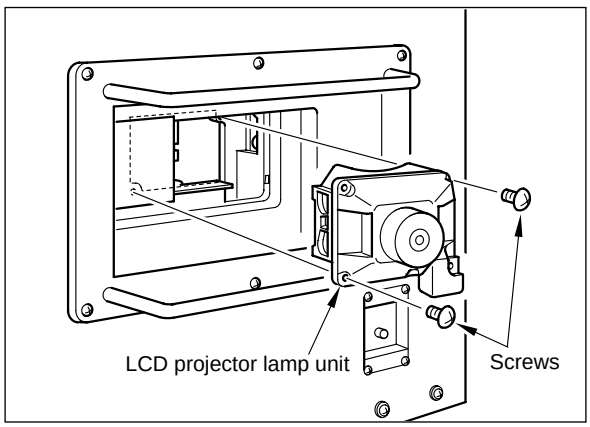


- **HIGH TEMPERATURE**

# 7-4 Replacing the button

## How to replace the button

**•Before replacing the button, be sure to turn OFF the power switch and unplug the power cord from the receptacle.**

**1** Separate the cockpit unit, referring back to page 48.

**2** Remove the screws and detach the console cover bracket.

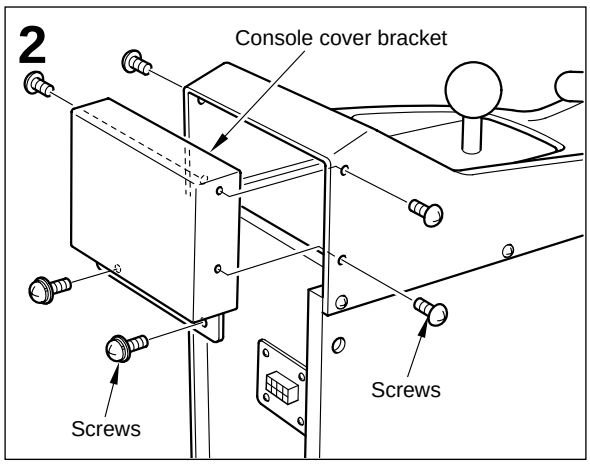


**3** Remove the screw and detach the band from the button socket.

**4** Disconnect the connector and draw the socket out of the button.

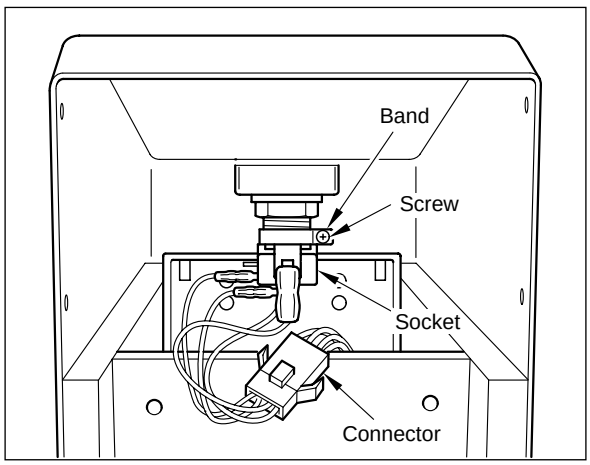


**5** Take the reverse steps to install the button into position. If the socket has been replaced, reconnect the cables as shown below.

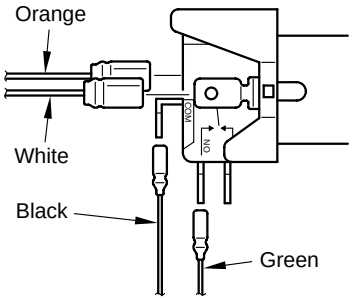


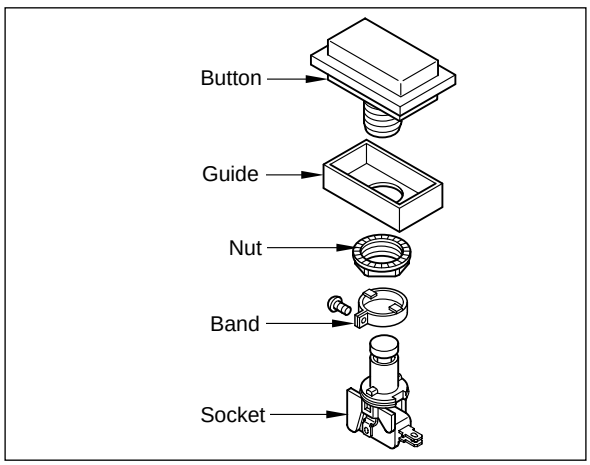

# 7-5 Replacing and adjusting the potentiometer

## How to replace the steering wheel unit potentiometer

**•Before replacing the steering wheel unit potentiometer, be sure to turn OFF the power switch and unplug the power cord from the receptacle.**

**1** Separate the cockpit unit and the screen unit from each other, referring back to page 46.

**2** Remove the 5 screws from the top of the top cover. Loosen all the other screws from the sides and take away the top cover.

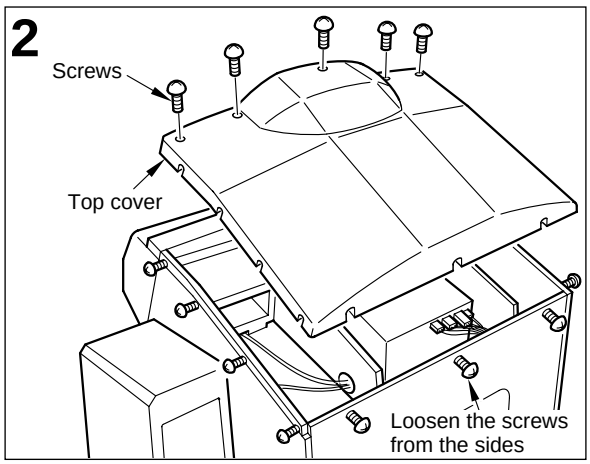


**3** Disconnect the wiring from the steering wheel unit potentiometer bracket. Loosen the two lock screws.

•If the lock screws are inaccessible, turn the steering wheel to make them accessible and easy to loosen.

**MEMO**

**4** Remove the screw from the potentiometer bracket and take out the potentiometer and the bracket together.

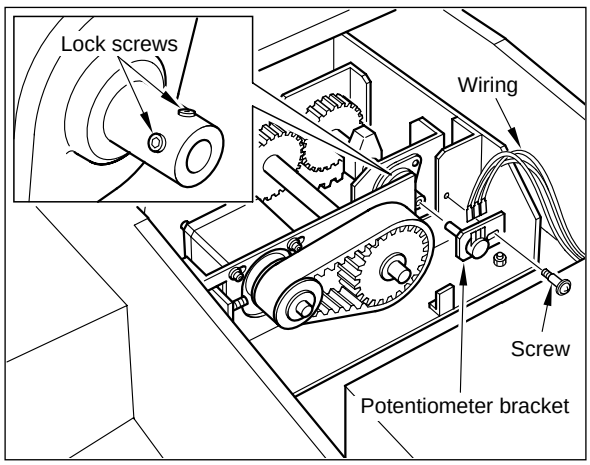


**5** Remove the hexagon nut and separate the potentiometer.

•When replacing the potentiometer with new one, be sure to first make the adjustment on the next page.

**MEMO**

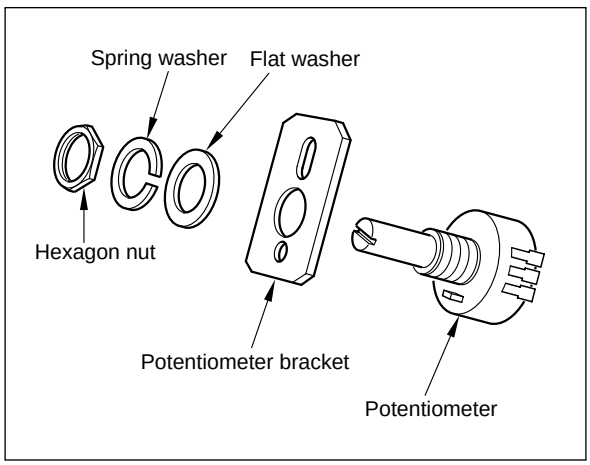

## How to adjust the steering wheel unit potentiometer

**1** Fit the potentiometer projection to the smallest hole of the potentiometer bracket. Tighten up the hexagon nut.

**2** Connect the wiring poperly.

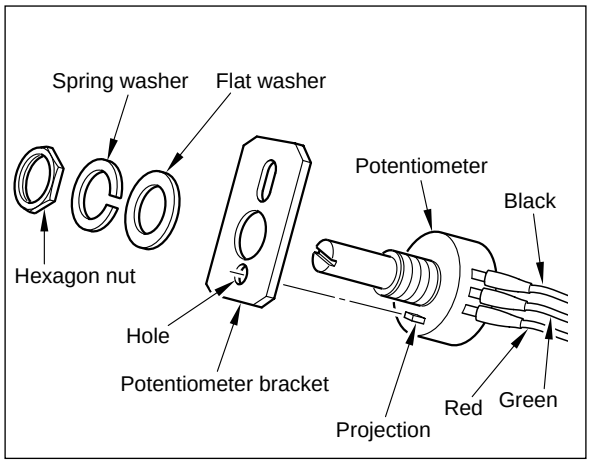


**3** Grasp the potentiometer tip with your fingers and adjust it as shown in the figure.

**4** Mount the potentiometer bracket back in place and tighten up the two lock screws.

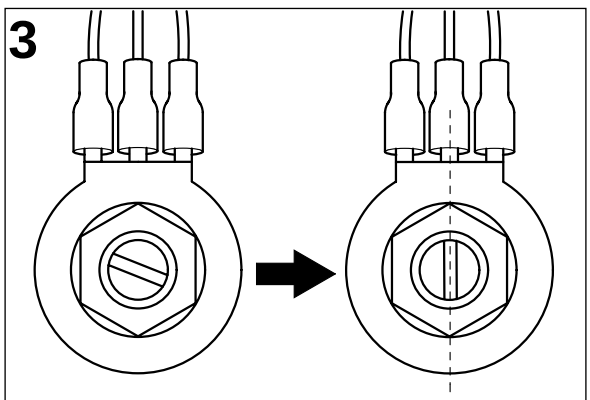


Adjust so that the (-) mark on the potentiometer knob is aligned with the center terminal.

**5** Reattach the top cover and make all the connections of the cockpit unit.

•Even when the potentiometer bracket screw and the lock screws are tight enough, the potentiometer bracket has some play. Keep in mind that the bracket is not tightly locked.

**MEMO**

**6** Carry out “5-2 PCB start-up check (self test)” on page 27.

**7** Call up the “I/O CHECK” screen, show on page 30. Move the steering wheel and make sure the “I” make comes to the LEFT and RIGHT positions.

## How to replace the pedal unit (acceleration and brake) potentiometers

**•Before replacing the acceleration and brake pedal unit potentiometers, be sure to turn OFF the power switch and unplug the power cord from the receptacle.**

**1** Separate the cockpit unit and the screen unit from each other, referring back to page 46.

**2** Remove the screws and detach the front door of the cockpit unit.

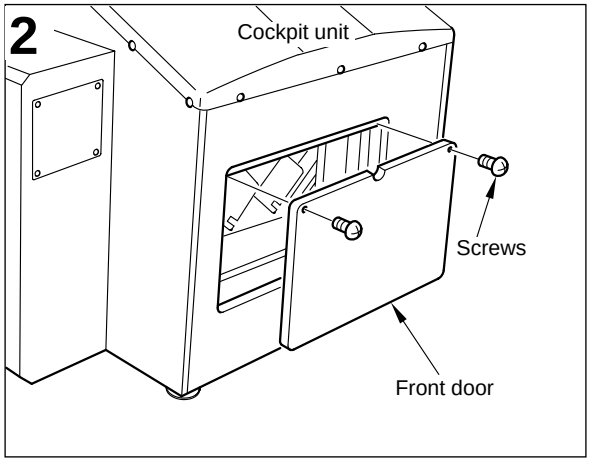


**3** Disconnect the wiring from the pedal unit potentiometer.
Loosen the lock screws and take out the gears.

•If the lock screws are in a position where it is difficult to loosen them, press the pedal so that they are positioned favorably for looseing.

**MEMO**

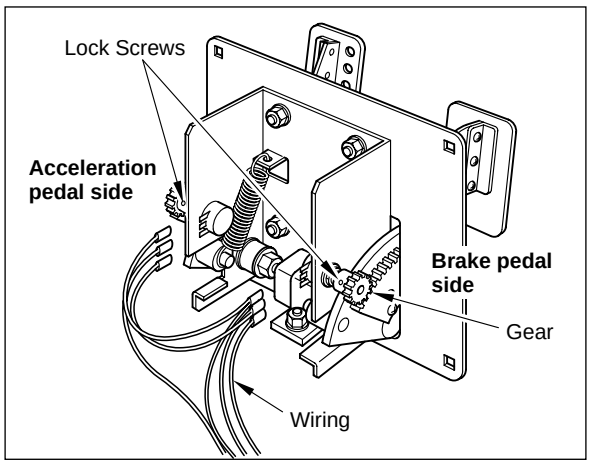


**4** Remove the hexagon nut and separate the potentiometer.

**5** Fit new potentiometer first and then the gears.

•Be sure to make the adjustment on the next page before tightening up the gears' lock screws.
•When replacing the potentiometer with new one, be sure to first make the adjustment on the next page.

**MEMO**

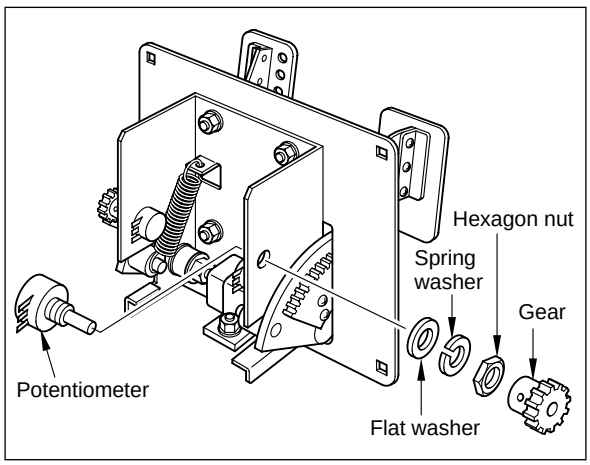

## How to adjust the pedal unit (acceleration and brake) potentiometers

**1** Without touching the pedal, adjust the potentiometer with a flatblade screwdriver.

**[Adjusting method]**

- **Potentiometer for accelerator**
  Fully turn the potentiometer clockwise and the turn it back by about 10°.
- **Potentiometer for brake**
  Fully turn the potentiometer counterclockwise and then turn it back by about 10°.

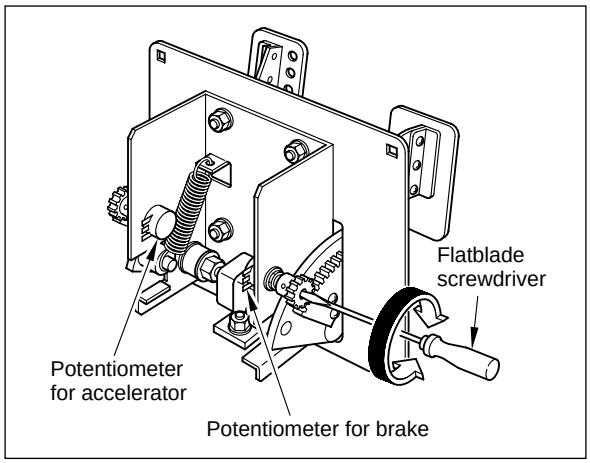


**2** Tighten up the gears' lock screws. Be careful not to confuse the wiring.

**3** Attach the front door in position. Interconnect the cockpit unit and the screen unit.

**4** Carry out "5-2 PCB start-up check (self test)" on page 27.

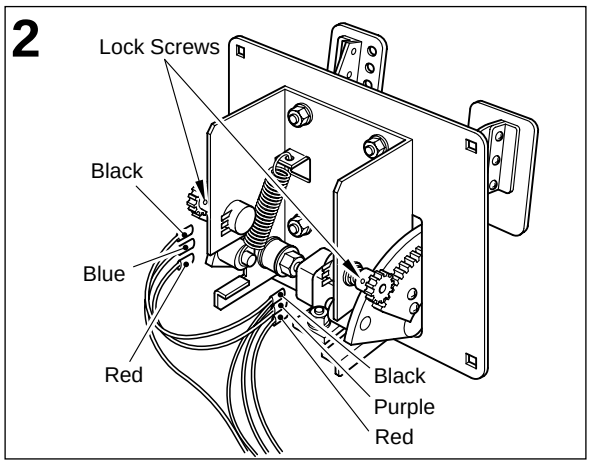


**5** Call up the "I/O CHECK" screen, show on page 30. Step on the acceleration pedal and brake pedal and make sure the "I" make comes to the MIN and MAX positions.

## How to replace the clutch pedal unit potentiometer

**•Before replacing the clutch pedal unit potentiometer, be sure to turn OFF the power switch and unplug the power cord from the receptacle.**

**1** Separate the cockpit unit and the screen unit from each other, referring back to page 46.

**2** Remove the screws and detach the front door of the cockpit unit.

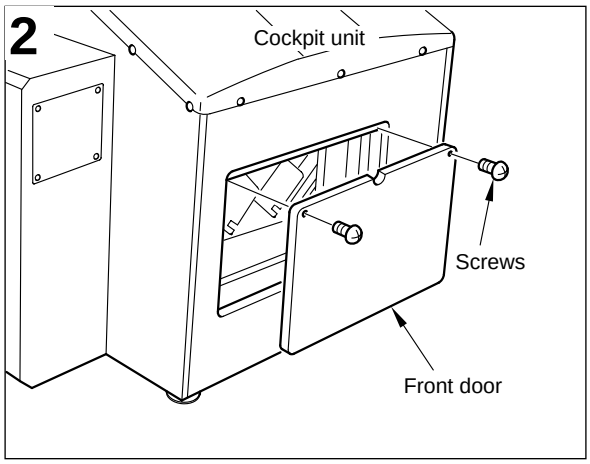


**3** Disconnect the wiring from the pedal unit potentiometer.
Loosen the lock screw and take out the gear.

•If the lock screw are in a position where it is difficult to loosen them, press the pedal so that they are positioned favorably for looseing.

**MEMO**

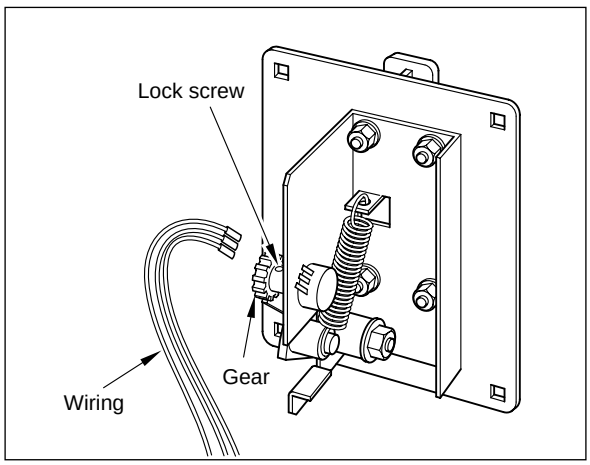


**4** Remove the hexagon nut and separate the potentiometer.

**5** Fit new potentiometer first and then the gear.

•Be sure to make the adjustment on the next page before tightening up the gear's lock screw .
•When replacing the potentiometer with new one, be sure to first make the adjustment on the next page.

**MEMO**

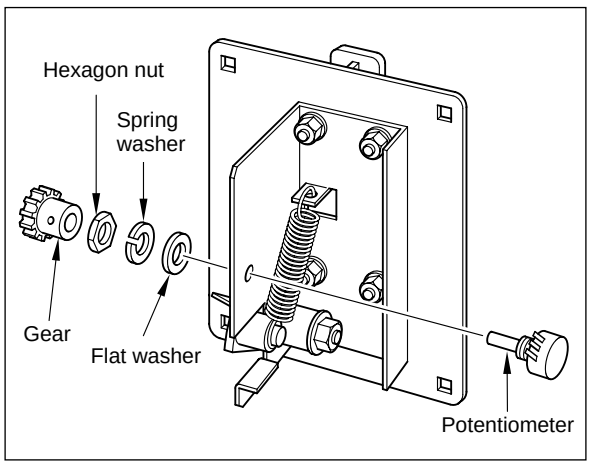

## How to a adjust the clutch pedal unit potentiometer

**1** Without touching the pedal, adjust the potentiometer with a flatblade screwdriver.

**[Adjusting method]**

- **Potentiometer for clatch**
  Fully turn the potentiometer clockwise and then turn it back by about 10°.

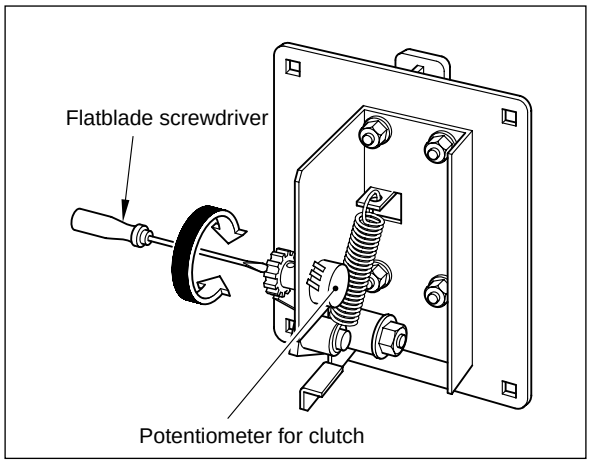


**2** Tighten up the gear's lock screw. Be careful not to confuse the wiring.

**3** Attach the front door in position. Interconnect the cockpit unit and the screen unit.

**4** Carry out "5-2 PCB start-up check (self test)" on page 27.

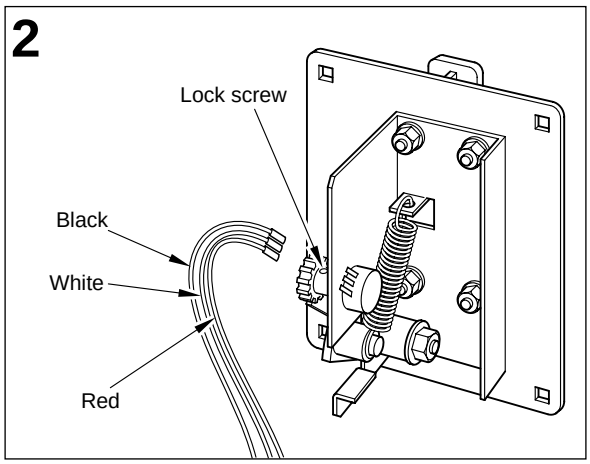


**5** Call up the "I/O CHECK" screen, show on page 30. Step on the clutch pedal and make sure the "I" make comes to the MIN and MAX positions.

## How to replace the hand brake unit potentiometer

- **Before replacing the hand brake unit potentiometer, be sure to turn OFF the power switch and unplug the power cord from the receptacle.**
- **Since the hand brake unit is heavy, use due care when handling it.**
- **When detaching and reattaching the console cover, be very careful not to get your fingers caught.**

**1** Separate the cockpit unit, referring back to page 48.

**2** Peel the sticker up to the slit of the mask plate. Remove the mask plate from the shift unit.

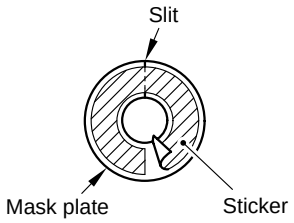


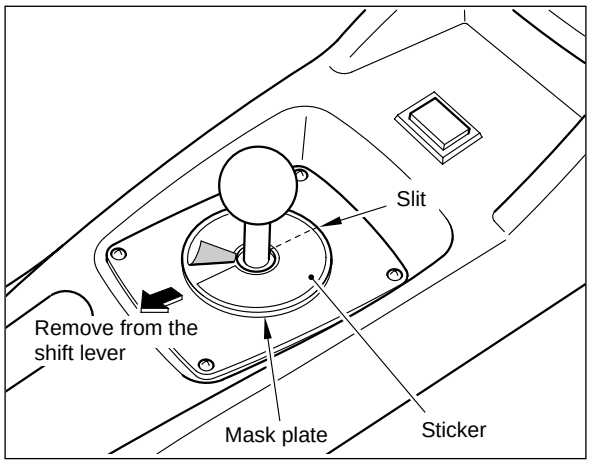


- The mask plate is used again after replacement of the shift unit. Keep it in a safe place.

**MEMO**

**3** Remove the screws and then the acrylic plate and the stainless plate.

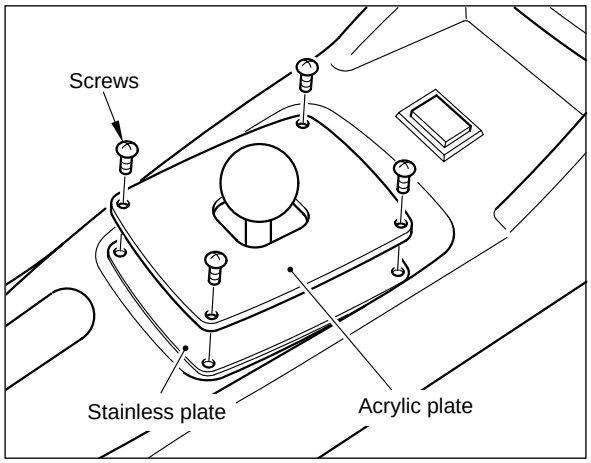


**4** Remove the screws. Pulling the hand brake toward yourself, detach the console cover and its bracket (see page 54). Also disconnect the connector of the START button.

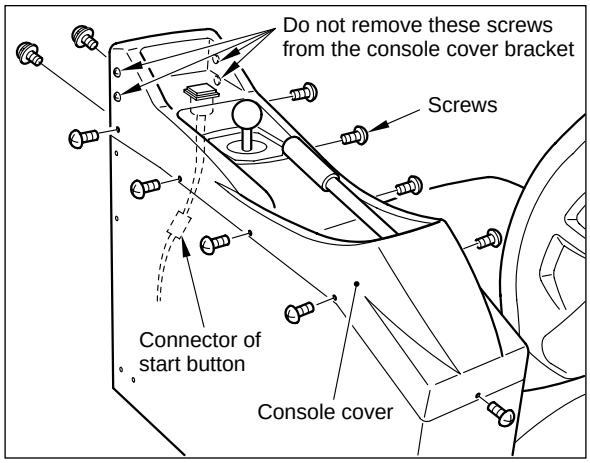

**5** Remove the screws. Take out the hand brake unit and disconnect the connector.

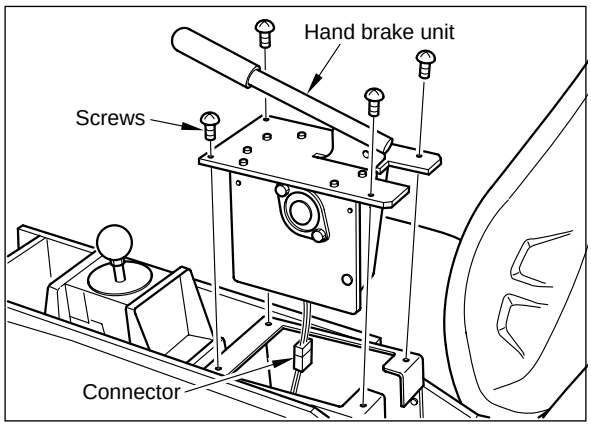


**6** Disconnect the wiring and the ground wire from the potentiometer. Remove the screws and take out potentiometer bracket.

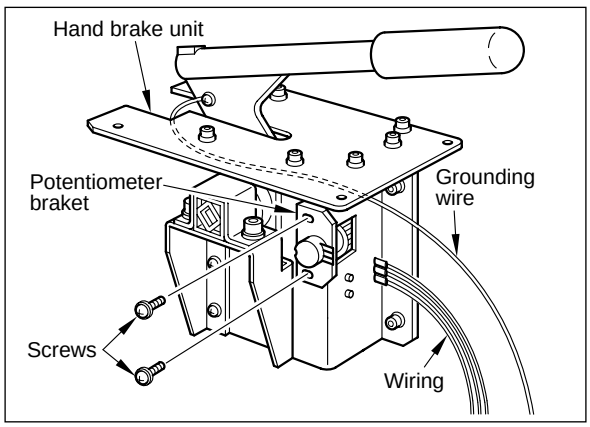


**7** Loosen the lock screw and pull out the gear.

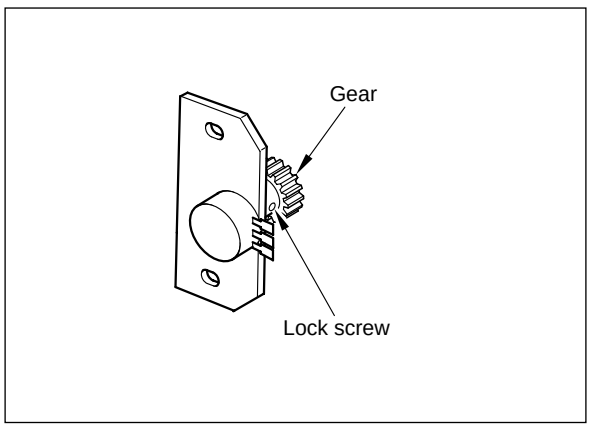


**8** Remove the hexagon nut and separate the potentiometer.

•When replacing the potentiometer with new one, be sure to first make the adjustment on the next page.

**MEMO**

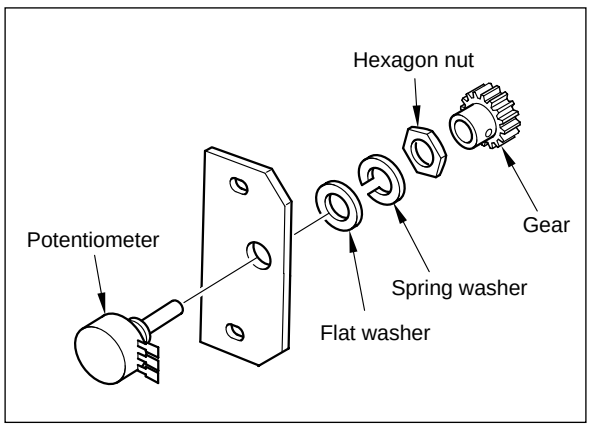


**9** Fit a new potentiometer first and then the gear. Tighten up the lock screw.

## How to adjust the hand brake unit potentiometer

**1** Turn the gear all the way in the direction (1). Turn it back by about 10°. (See at right)

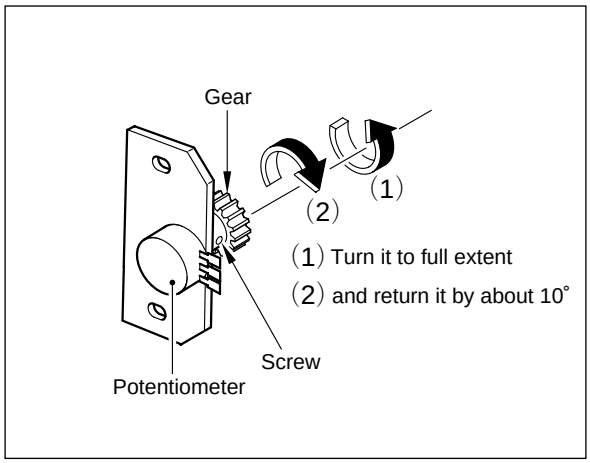


**2** Mount the potentiometer bracket, paying attention so that the gear B should be engaged with the gear A provided at the hand brake unit.

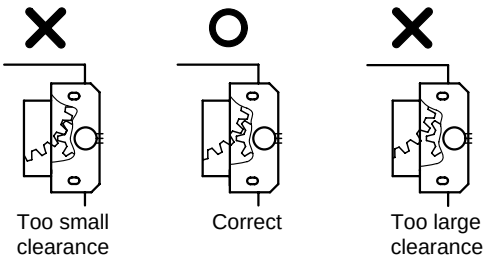


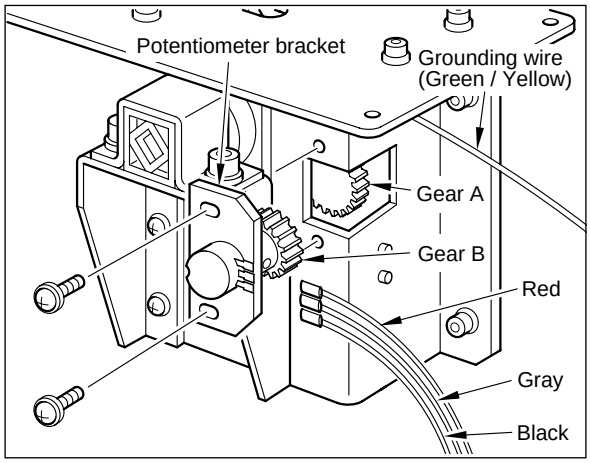


**3** Reconnect the wiring. Be careful not to confuse them.

**4** Replace the hand brake unit and the console cover into position.

**5** Reconnect the cockpit unit back into position.

**6** Carry out “5-2 PCB start-up check (self test)” on page 27.

**7** Call up the “I/O CHECK” screen, show on page 30. Move the hand brake and make sure the “I” make comes to the MIN and MAX positions.

# 7-6 Replacing the shift unit microswitch

## How to replace the shift unit microswitch

**•Before replacing the shift unit microswitch, be sure to turn OFF the power switch and unplug the power cord from the receptacle.**

**1** Separate the cockpit unit first and then remove the console cover, referring back to page 61.

**2** Remove the screws and take out the shift unit.

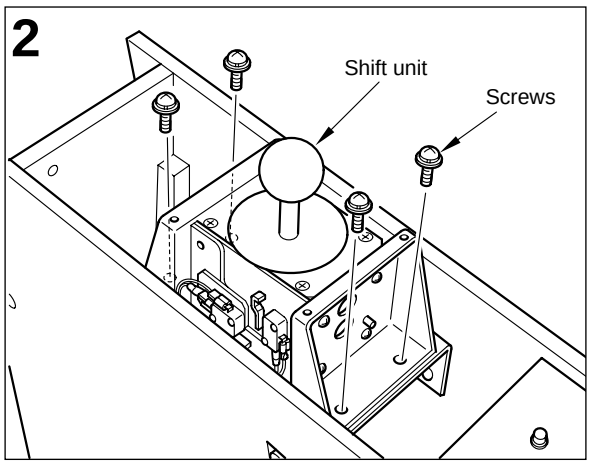


**3** Remove the screws and take out the microswitch.

**4** When replacing the microswitch with new one, be careful to position the microswitch correctly. Do not confuse the wiring.

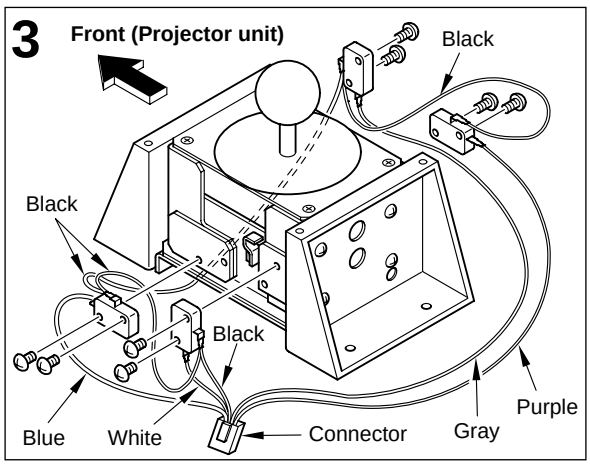


**5** Place the shift unit back into position.

•Place the shift unit with its “FRONT” sticker facing the projector unit.

**MEMO**

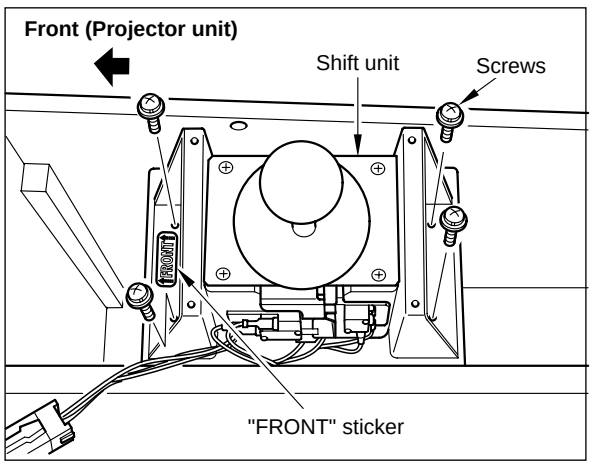

# 7-7 Inspecting and replacing the motor brushes

At the motor of the steering wheel unit are fitted two motor brushes. The motor brushes are worn every time when the machine is operated. It is therefore recommended to do periodical checking about every 2000 hours.

## How to inspect and replace the motor brushes

**•Before inspecting and replacing the motor brushes, be sure to turn OFF the power switch and unplug the power cord from the receptacle.**

**1** Separate the cockpit unit and the screen unit from each other, referring back to page 46.

**2** Remove the 5 screws from the top of the top cover. Loosen all the other screws from the sides and take away the top cover.

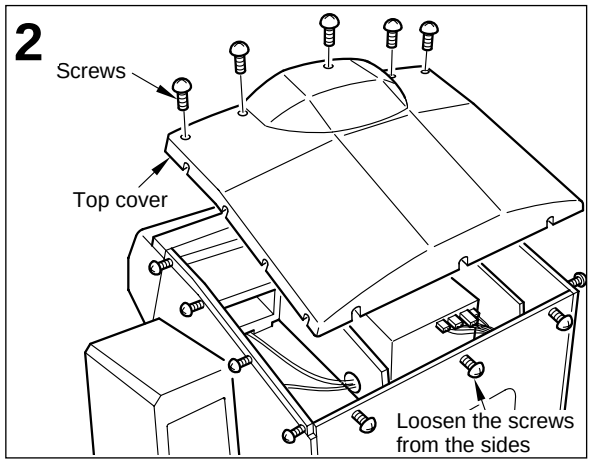


**3** Disconnect the wiring from the motor.

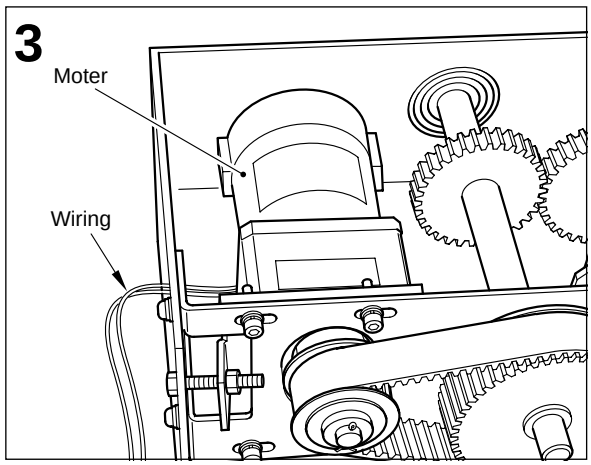


**4** Using a Flatblade screwdriver, remove the screw caps and take out the motor brushes.

•Check to see if the motor brush has worn out up to the marked line. If so, replace the motor brush with new one.
**Motor brush part No. 0000036164**

**MEMO**

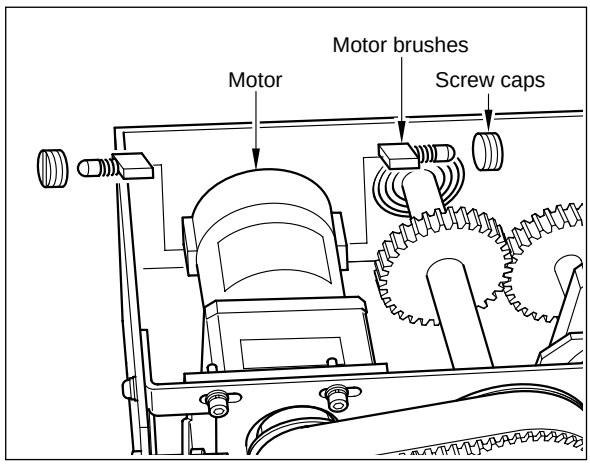


**5** Install the motor brushes back into position. Attach the top cover in place.

# 7-8 Replacing the timing belt and adjusting its tension

## How to replace the timing belt

**•Before replacing the timing belt and adjusting its tension, be sure to turn OFF the power switch and unplug the power cord from the receptacle.**

**1** Separate the cockpit unit and the screen unit from each other, referring back to page 46.

**2** Remove the 5 screws from the top of the top cover. Loosen all the other screws from the sides and take away the top cover.(See page 65)

**3** Loosen the motor fixing screws and the adjuster bolt. Undo the timing belt.

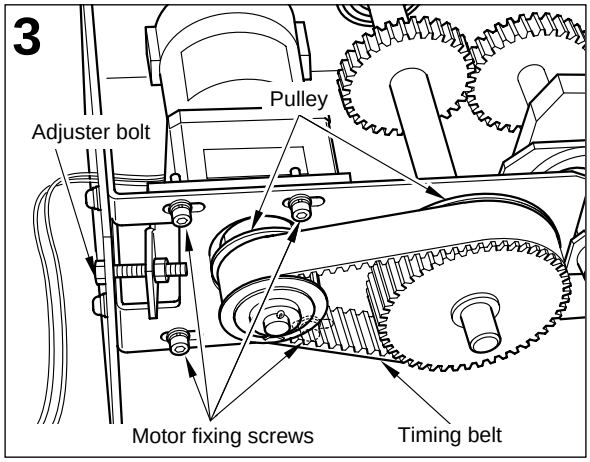


## How to adjust timing belt tension

**1** Keeping loose the motor lock screws and the adjuster bolt, apply a new timing belt on the pulley.

**2** Make sure the timing belt runs in mesh with the pulley.
Tighten the adjuster bolt to achieve the deflection specified in the figure.

**Appropriate timing belt sag**

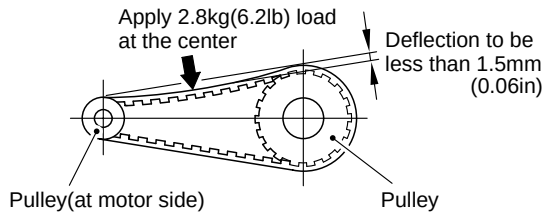


Preferably use a tension gauge available on the market for easier adjustment. For frequency measurement,set to 305 Hz.

**3** Make sure the deflection is as specified. Tighten up the lock nut for the adjuster bolt.

•If the timing belt has a wrong deflection, it may break or wear out much earlier than expected.

**MEMO**

**4** Finally tighten up the motor fixing screws evenly.

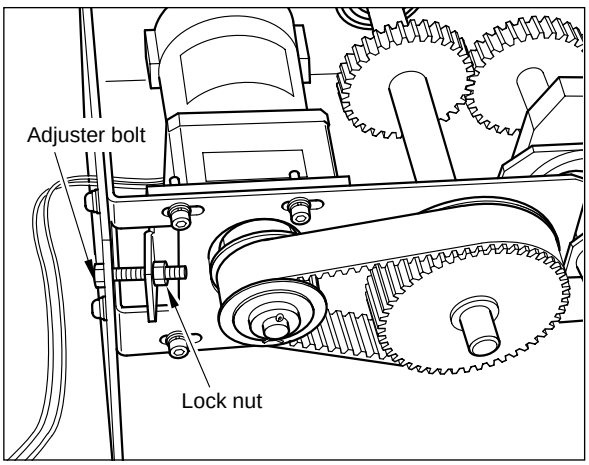

# 7-9 Resetting the circuit protector and replacing the fuse

If an overcurrent or short circuit occurs, the circuit protector will be automatically actuated to protect the electric circuits of the game machine. When resetting the circuit protector, turn OFF the power switch, unplug the power cord from the receptacle, eliminate the cause, and then press the button of the circuit protector. When replacing the fuse, the same procedure should be followed.

## How to reset the power unit circuit protector

**•Before resetting the circuit protector, be sure to turn OFF the power switch and unplug the power cord from the receptacle.**
**•If the circuit protector trips soon again, immediately turn OFF the power switch, unplug the power cord, and contact your nearest dealer.**
**•The projector unit has some internal parts with high voltage. Only a qualified industry specialists is allowed to open the back door of the projector unit. With this back door open, be very careful not to touch unnecessary parts.**
**•Before resetting the fuse, be sure to turn OFF the power switch and unplug the power cord from the receptacle.**
**•Be sure to replace the fuse with a new one of the same type.**
**•If the machine is in abnormal conditions and does not operate normally, immediately turn OFF the power switch, unplug the power cord from the receptacle and contact your nearest dealer.**

Press the circuit protector button at the power unit.

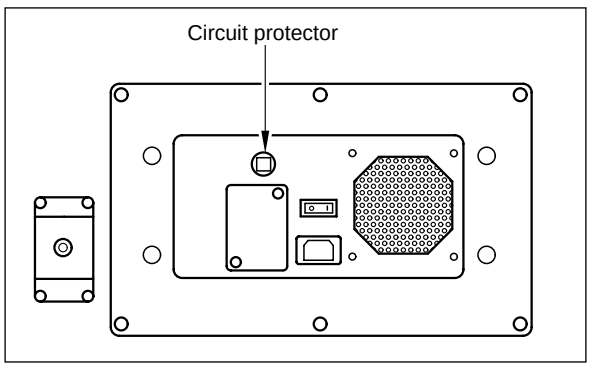


•There are also 3 circuit protectors on the PCB unit (see the bottom figure or next page). When the power unit circuit protector is found to work, check the circuit protectors on the PCB unit.

**MEMO**

## How to replace the PCB unit fuse (GY676-TB/HD)

**1** Remove the back door of the projector unit. (See page 69)

**2** Turning counterclockwise, remove the cap off the fuse holder on the PCB unit.

**3** Take out the fuse and place a new one instead. Press-fit and turn the cap tightly.

**4** Attach the back door of the projector unit into position.

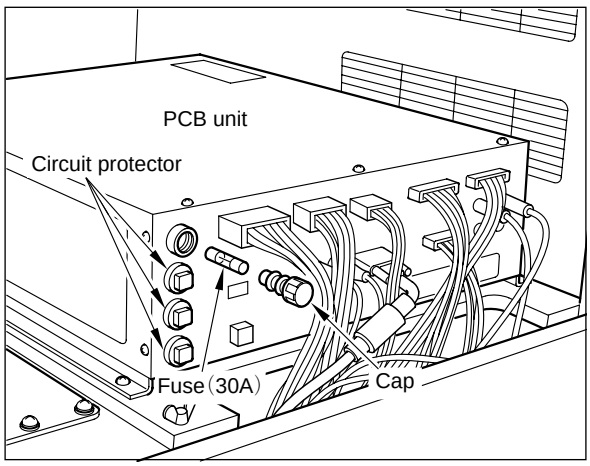

## How to access the PCB unit circuit protectors and replacing the fuse (GY676-UC)

**1** Remove the back door of the projector unit. (See page 69)

**2** Remove the screws and datach the cover, as shown at right.

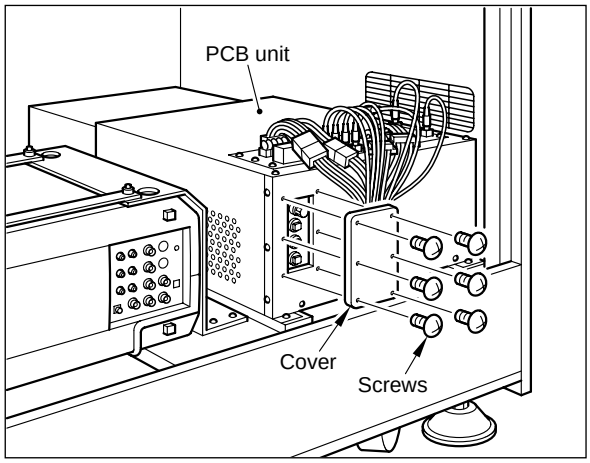


**3** Turning counterclockwise, remove the cap off the fuse holder on the PCB unit.

**4** Take out the fuse and place a new one instead. Press-fit and turn the cap tightly.

**5** Attach the back door of the projector unit into position.

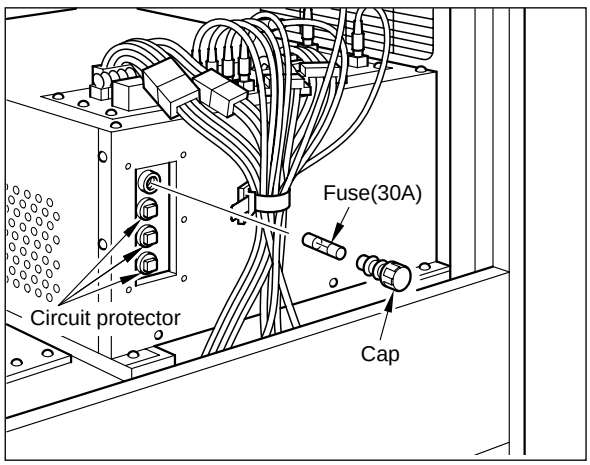

# 7-10 Cleaning the air filter

Clean up the air filter after 100 operating hours or so. When used in a dusty place, preferably do the cleaning more often.

## How to clean the air filter

**•Before opening the back door, be sure to turn OFF the power switch and unplug the power cord from the receptacle.**
**•The projector unit has some internal parts with high voltage. Only a qualified industry specialists is allowed to open the back door of the projector unit. with this back door open, be very careful not to touch unnecessary parts.**

**1** Remove the back door of the projector unit.

**2** Pull out the air filter unit at the bottom of the LCD projector toward the cockpit unit.

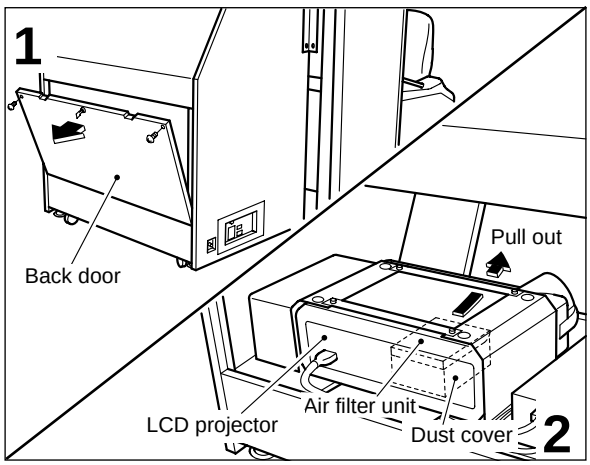


**3** Pinch the projection of the filter presser with your fingers. Flip up the holder and take out the air filter.

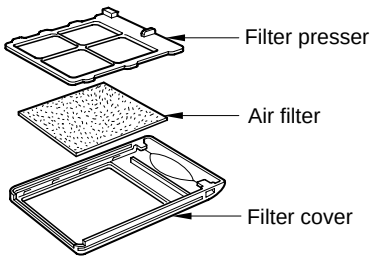


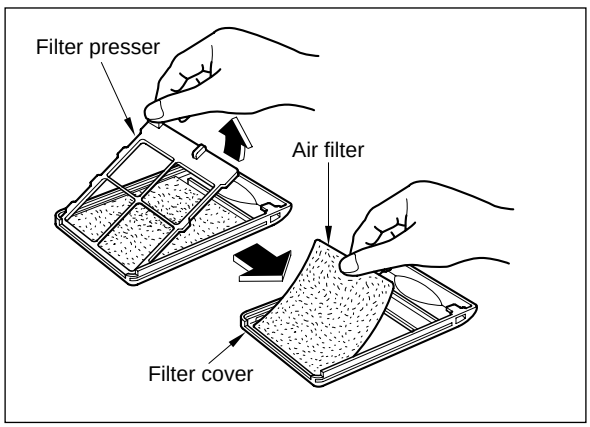


**4** Using a vacuum cleaner, clean up the air filter, filter presser and filter cover.

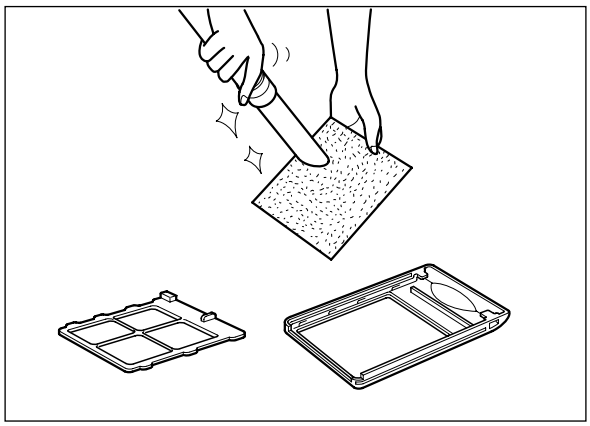

•If any of them is too dirty, wash it in lukewarm or cold water with neutral detergent. Let it dry up in the shade.
•If the air filter cannot be cleaned with neutral detergent, it means that the filter must be replaced.
**Air filter part No. 0000039113**

**MEMO**

**5** Finally place the air filter, filter cover and projector unit's back door into position.

## Cleaning the air filter of the PCB unit (GY676-TB / HD)

**1** Remove the back door of the projector unit.

**2** Disconnect all the connectors from the PCB unit.

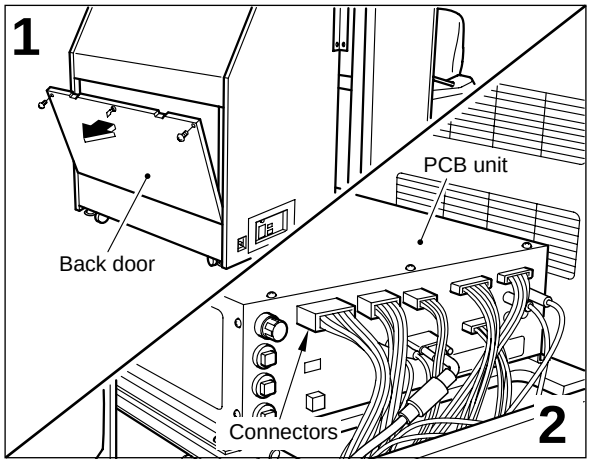


**3** Remove the thumbscrews and take out the PCB unit together with its wooden board.

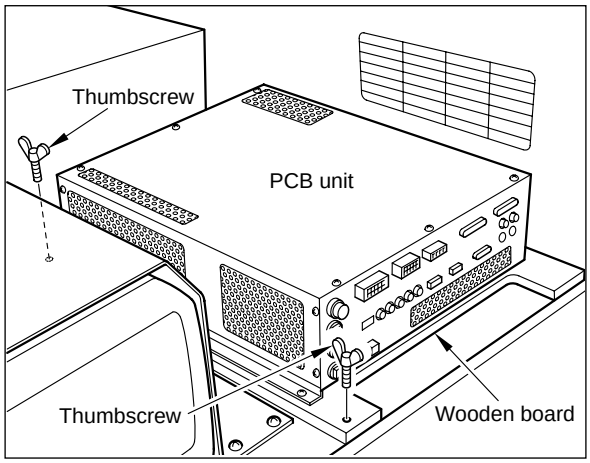


**•Since the PCB unit is heavy, use due care when handling it.**

**4** Using a vacuum cleaner, clean up the air filter.

**5** Finally take the reverse steps to place the PCB unit and the back door of the projector unit in position.

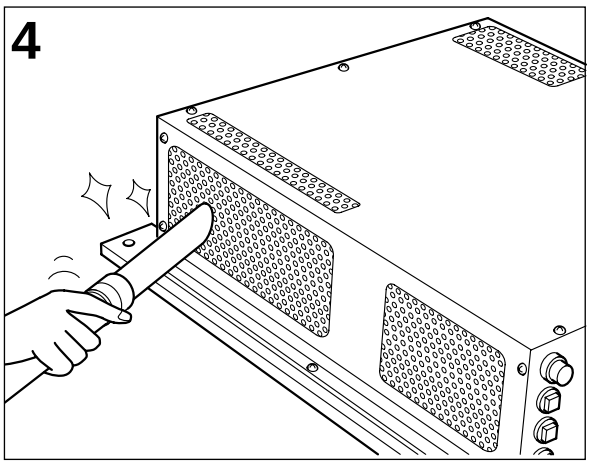

## Cleaning the air filter of the PCB unit (GY676-UC)

**1** Remove the back door of the projector unit. (See page 69)

**2** Undo the band off the bundled cables of the PCB unit, and disconnect all the connectors.

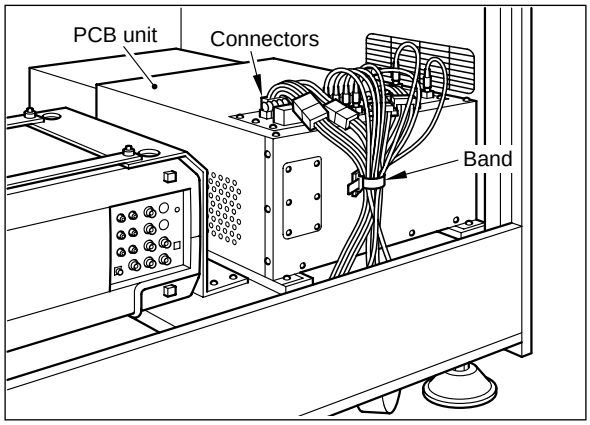


**3** Remove the screws and take out the PCB unit.

> **•Since the PCB unit is heavy, use due care when handling it.**

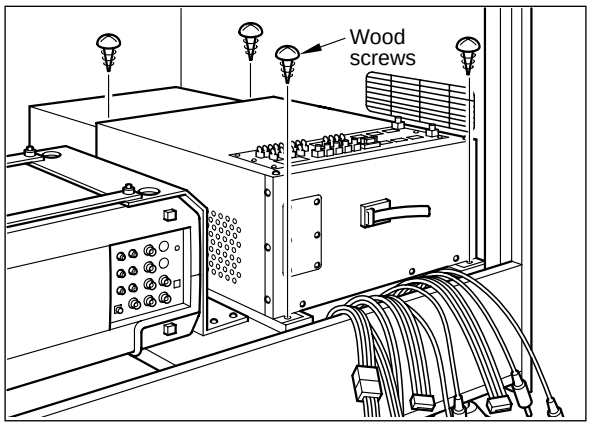


**4** Remove the screws and detach the air filter cover.

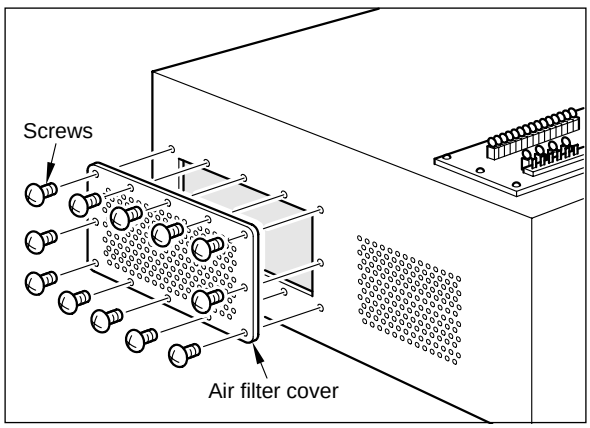


**5** Using a vacuum cleaner, clean up the air filter.

**6** Finally take the reverse steps to place the PCB unit and the back door of the projector unit in position.

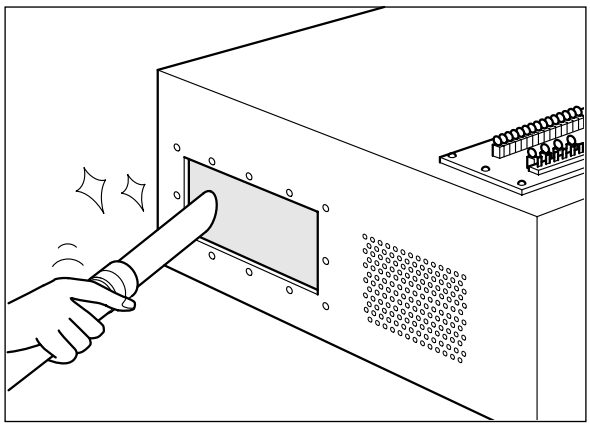

# 7-11 Adjusting the LCD projector

The LCD projector has already been adjusted at the time of shipment, but it may be readjusted with the attached projector remote controller as desired.

## Appearance of the projector remote controller

**•The projector unit has some internal parts with high voltage. Only a qualified industry specialists is allowed to open the back door of the projector unit. With this back door open, be very careful not to touch unnecessary parts.**

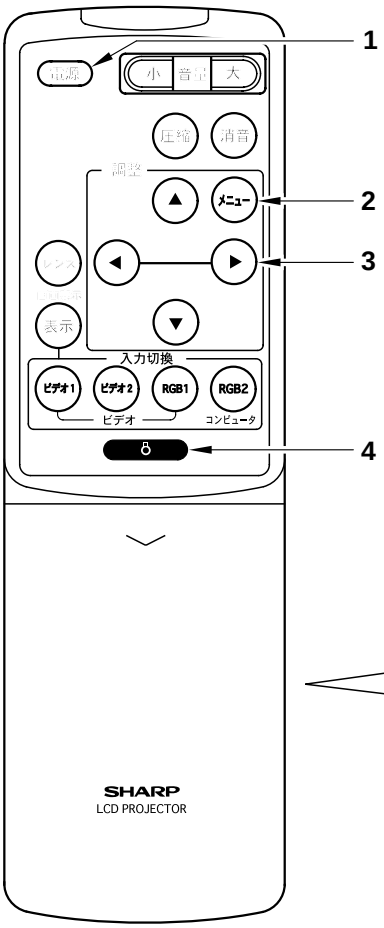


Projector remote controller

| | | |
|---|---|---|
| 1 | POWER button | Used to turn ON and OFF the power. Usually keep this button intact (only by a service industry specialists for maintenance purposes.) |
| 2 | MENU button | Used to call up the menu screen. |
| 3 | SELECT/ADJUST buttons | Used to select and preset adjustment items. |
| 4 | LIGHT-UP button | Pressed to use the remote controller in a dark place. The control buttons light up for about 6 seconds. |

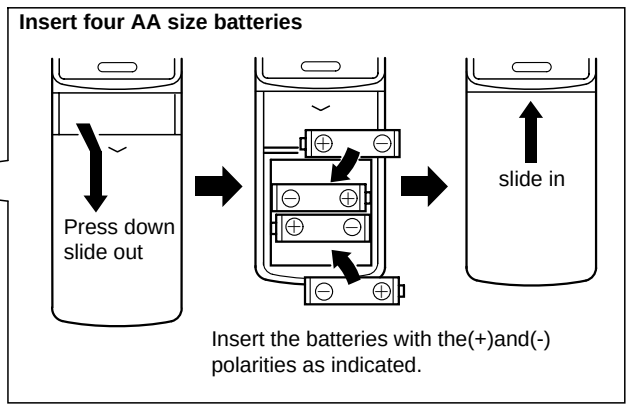


•Use only the above-mentioned buttons (1) to (4) on the projector remote controller. Never touch any other buttons because otherwise malfunction may result.

**MEMO**

The images on the screen may be off shade when the machine has been moved to another place or repositioned or if it is affected by magnetism from a nearby building or the geomagnetism. If such color distortion happens over the screen, make the RGB2 input adjustment in the following steps.

## How to make the RGB2 input adjustment

- **Operate the projector remote controller from a distance of 3 meters (118 inches) or shorter in front of the projector.**
- **When the screen is disturbed by static electricity etc. during the adjustment of the unit, turn OFF the power switch and on again, and readjust the unit.**
- **If the projector remote controller does not work properly, replace the batteries with new ones. If the projector remote controller is not to be used for a long time, remove the batteries from the projector remote controller. Failure to do so could cause liquid leakage.**
- **Do not use batteries of different types, nor mix old and new batteries together.**

Press the RGB2 button on the projector remote controller.

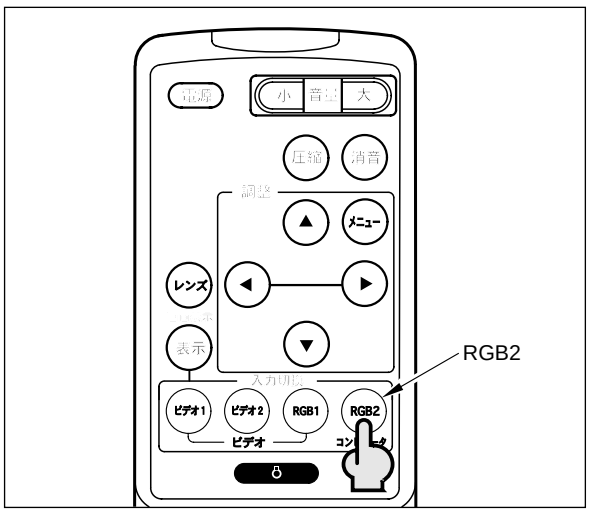


### Screen display

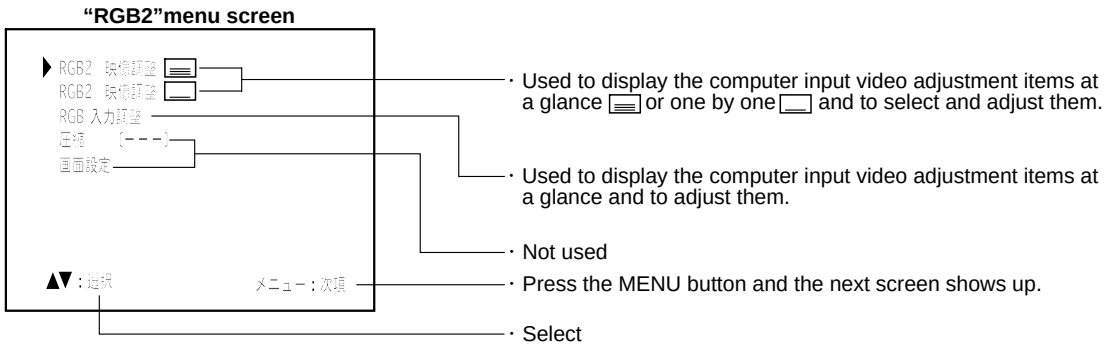


Thes appears on the screen for about 30 seconds. When if disappears press the MENU button.

## How to adjust the RGB2 picture

First call up the “COLOR CHECK” screen in the manual test mode.(See pages 29 and 31)

**1** Get the “RGB2” menu screen displayed on the screen, and press the MENU button. (The figure at right shows the screen when the list at a glance has been selected.)

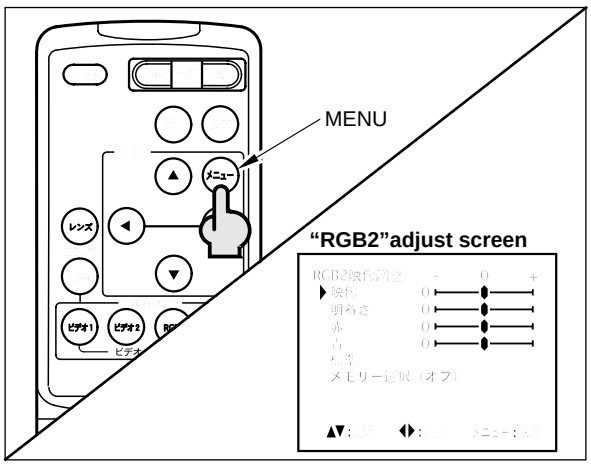


### Screen display

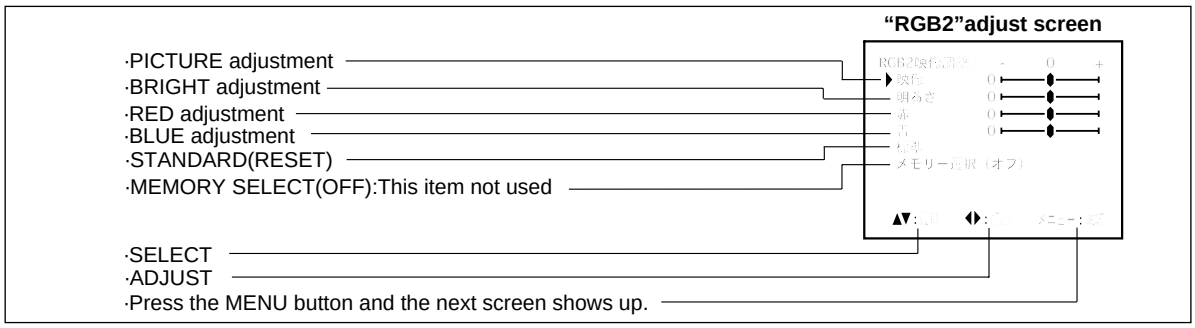


**2** Press the SELECT (▲▼) buttons to select a desired adjustment item.

Hold down the buttons and the adjustment items change one after the other as shown below.

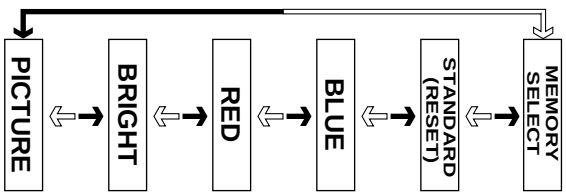


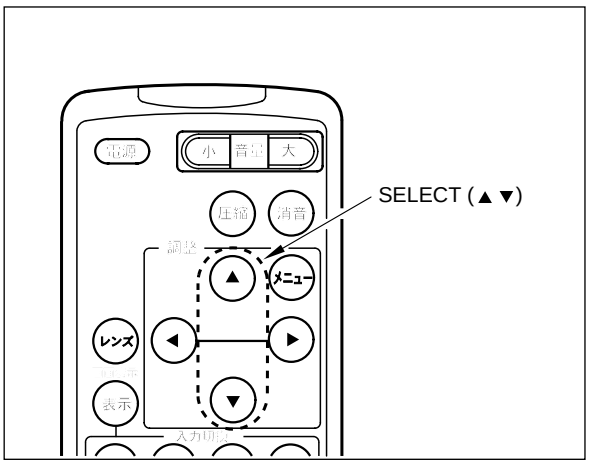


**3** Using the ADJUST (◀ ▶) buttons, adjust the settings of the selected adjustment item.

•By press the ADJUST (◀▶) buttons, the“◆”mark shifts in the adjustable range from -30 to +30.

**MEMO**

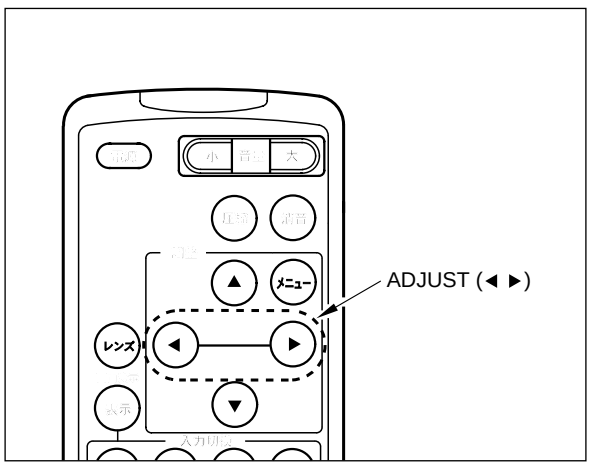

**4** Modify the settings for other adjustment items in the above steps **2** and **3**.

### “RGB 2” adjust screen

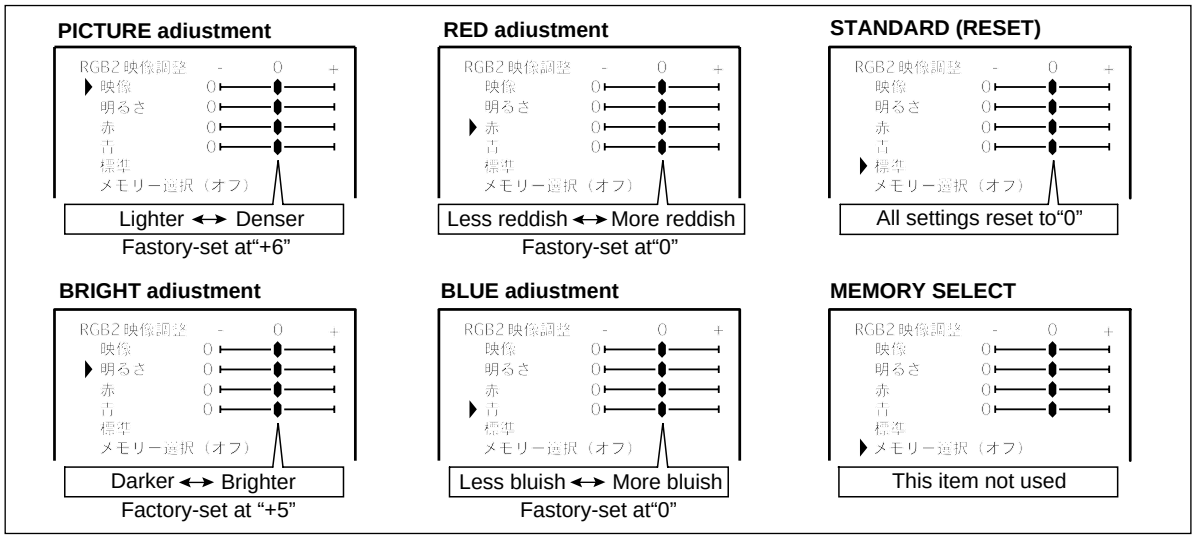


**5** Finally, press the MENU button and the display exits.

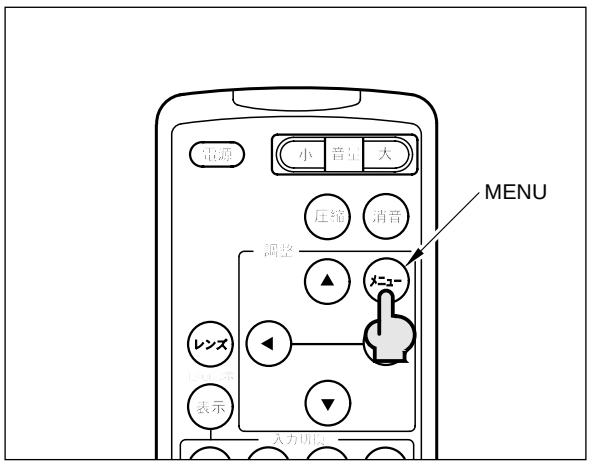

## How to adjust the RGB input

Make the following adjustments and settings to achieve the best images. To adjust the RGB input, call up the “SCREEN CHECK” screen in the manual test mode. (See pages 29 and 31)

- •Horizontal phase adjustment .. Adjusted if characters on the screen look flickering or out of contrast.
- •Horizontal position adjustment ... Adjusted if the image is shifted too much to the right or left.
- •Vertical position adjustment .... Adjusted if the image is shifted too much upward or downward.

**1** Select “RGB2” to get on the screen.

**2** Press the SELECT (▲▼) buttons to select “RGB input adjustment”. Press the MENU button.

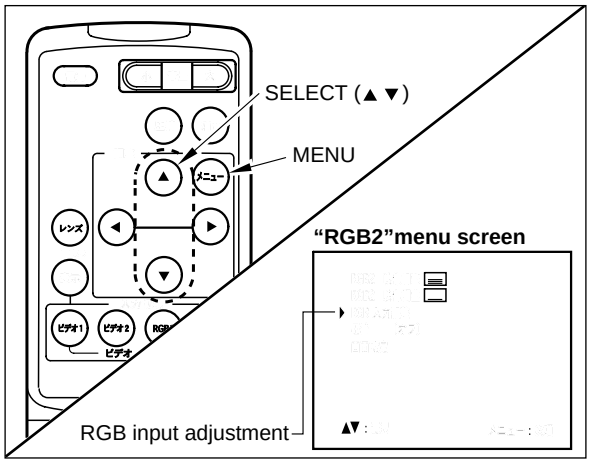


**3** **To adjust the horizontal phase**
Press the SELECT (▲▼) buttons to select “Horizontal phase”.

**4** Watching the screen and using the ADJUST (◀ ▶) buttons, adjust the setting.

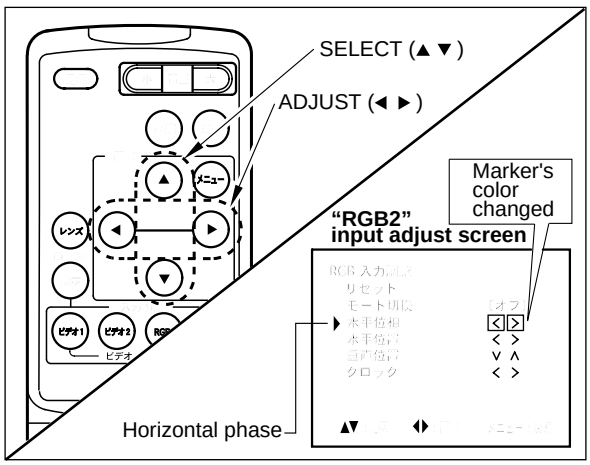


**5** **To adjust the horizontal position**
Press the SELECT (▲▼) buttons to select “Horizontal position”.

**6** Using the ADJUST (◀ ▶) buttons, adjust the display to the center of the screen.

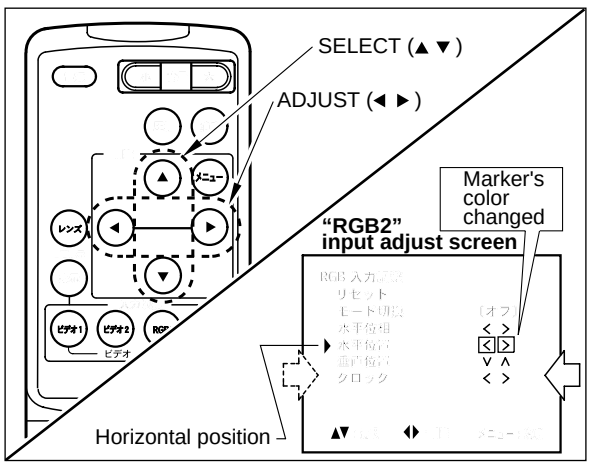

**7** **To adjust the vertical position**
Press the SELECT (▲▼) buttons to select “Vertical position”.

**8** Using the ADJUST (◀ ▶) buttons, adjust the display to the center of the screen.

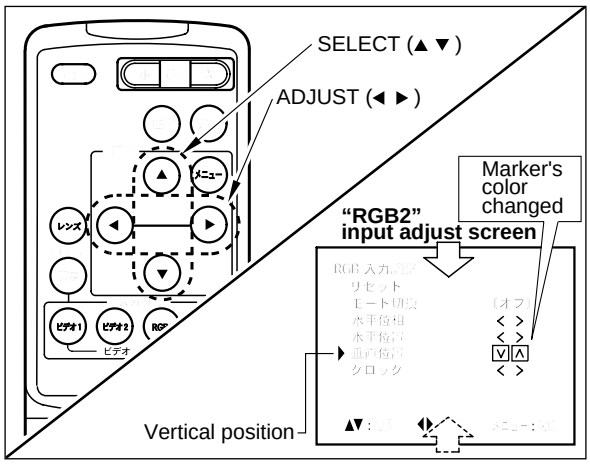


**9** Finally press the MENU button to get the display out of the screen.

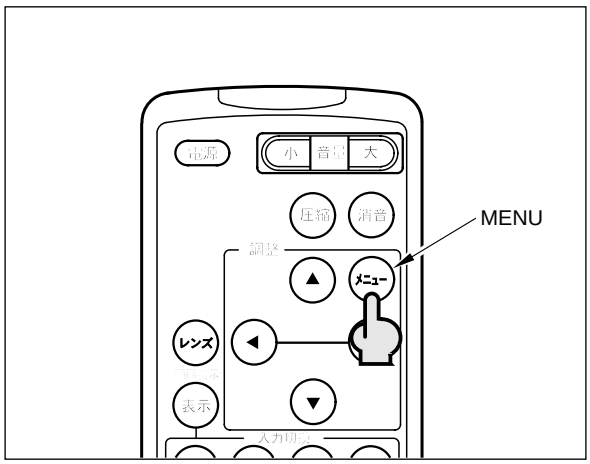

## How to adjust the zoom, shift and focus

The machine has three lens adjustment functions. To adjust the zoom, shift and focus, call up the “SCREEN CHECK” screen in the manual test mode. (See pages 29 and 31)

**1** **For adjusting the ZOOM**
Press the LENS button to call up the zoom mode and press the ADJUST (◀ ▶) buttons to adjust the zoom.

•Each time the LENS button is press, the modes change as follows.

ZOOM → SHIFT → FOCUS

**MEMO**

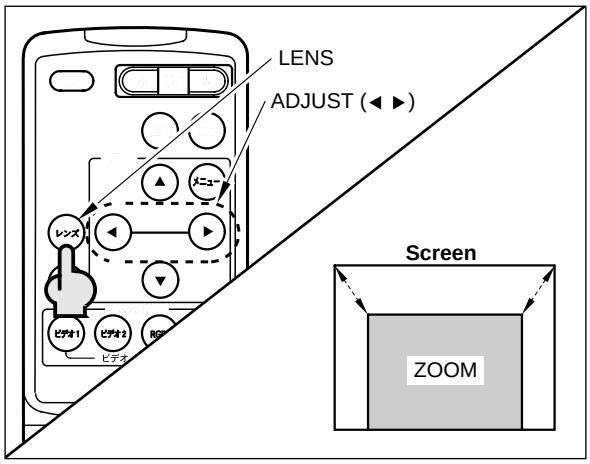


**2** **For adjusting the lens SHIFT**
Press the LENS button to call up the shift mode and press the ADJUST (◀ ▶) buttons to adjust the image position.

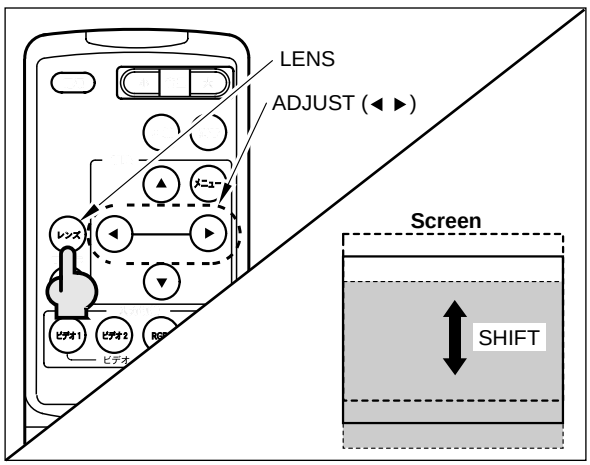


**3** **For adjusting the FOCUS**
Press the LENS button to call up the focus mode and press the ADJUST (◀ ▶) buttons to adjust the focus.

**4** Finally, press the MENU button and the display exits.

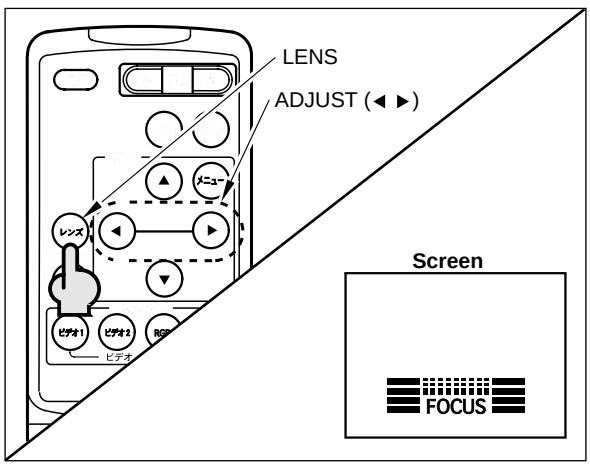


•Adjust the focus untill the picture on the screen is sharp.
•The focus pattern appears on the screen.
•The picture can be adjusted to the desired size within the zoom lens range.
•The picture can be adjusted within the shift range of the lens.

**MEMO**

## 7-12 Wiring diagram

**GY676-TB specifications for regions using 110 voltage area in Asia. 1/2**

# Wiring diagram

**GY676-TB specifications for regions using 110 voltage area in Asia. 2/2**

# Wiring diagram

**GY676-HD specifications for regions using 220 voltage area in Asia. 1/2**

# Wiring diagram

**GY676-HD specifications for regions using 220 voltage area in Asia. 2/2**

# Wiring diagram

**GY676-UC specifications for regions using 120 voltage area in the U.S.A.. 1/3**

# Wiring diagram

**GY676-UC specifications for regions using 120 voltage area in the U.S.A.. 2/3**

# Wiring diagram

**GY676-UC specifications for regions using 120 voltage area in the U.S.A.. 3/3**