MUSTANG

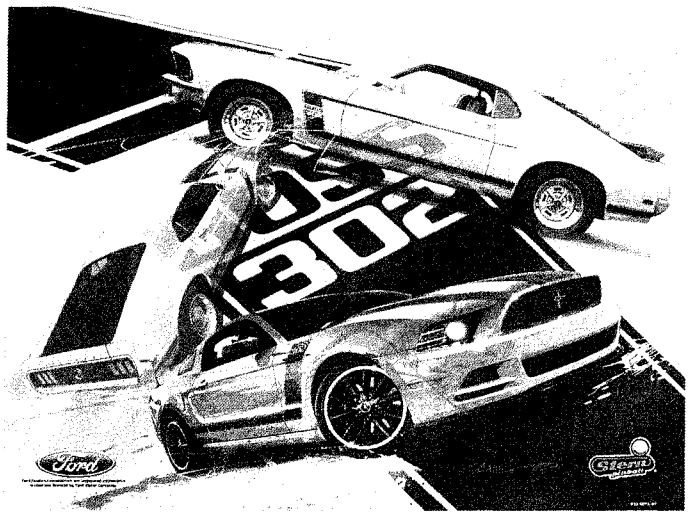

PREMIUM "BOSS" MODEL

LIMITED EDITION "50 YEARS" MODEL

Ford Oval and nameplates are registered trademarks owned and licensed by Ford Motor Company.

WARNING

Important Health Warning: PHOTOSENSITIVE SEIZURES

A very small percentage of people may experience a seizure when exposed to certain visual images, including flashing lights or patterns. Even people with no history of seizures of epilepsy may have an undiagnosed condition that can cause "photosensitive epileptic seizures" due to certain visual images, flashing lights or patterns. Symptoms can include light-headedness, altered vision, eye or face twitching, jerking or shaking of arms or legs, disorientation, confusion, momentary loss of awareness, and loss of consciousness or convulsions that can lead to injury from falling down or striking nearby objects.

IMMEDIATELY STOP PLAYING AND CONSULT A DOCTOR IF YOU EXPERIENCE ANY OF THESE SYMPTOMS.

Please visit **www.sternpinball.com**
For part numbers and mechanical drawings.

Stern Pinball machines are assembled in Melrose Park, Illinois, USA; each pinball machine has unique characteristics that make it a one of a kind American made product. Each machine will have variations in appearance resulting from differences in the machine's particular wood parts, individual silk screened art and mechanical assemblies. Stern Pinball has inspected each game element to insure it meets our quality standards.

Pinball Service Game Manual

Please call, email, or visit us online for technical support, questions or comments regarding this pinball game.
Go to **www.sternpinball.com** and click **SERVICE & SUPPORT**.
Find **Service Game Manual** (with updates), **Coin Cards, Game Code Library, Appendixes, Care & Maintenance, Service Bulletins** and much more!
• Toll-Free: **1-800-KICKERS (542-5377)** or **1-708-345-7700** • Email: **parts.service@sternpinball.com**

Stern® Pinball, Inc.
All Rights Reserved.
Printed in the U.S.A.
APRIL 2014

SPI Part Number
780-50F2-00

HOW TO UPDATE YOUR GAME CODE FOR S.A.M. SYSTEM MACHINES

USB Compatible Data Storage Device (Thumb, Flash *or* Jump Drives) required to copy game code into system.
S.A.M. System compatible, tested & SPI approved USB Data Storage Devices 128MB+
available through your local distributor: Ask for **SPI Part Number 970-0128-00**

** to get the Data Storage Device with the latest Game Code copied to it, add "game title" to above part number.*

STYLE, COLOR, SIZE AND MANUFACTURER SUBJECT TO CHANGE.

Game Code is subject to change. Update this game with the latest code downloaded from our website, from another game *or* order through your local distributor *(use SPI PN + name above).*

*Upon power-up the display will describe the version of code installed in your game. When directed to do so (via Service Bulletin or website announcement) you will need to update your code ... with the **BOOT FLASH EPROM*** installed, here's how:*

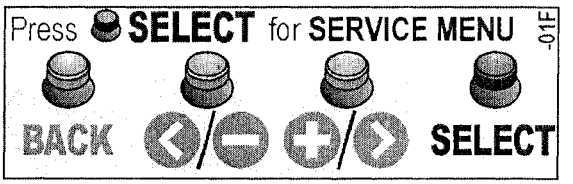

• Green Button Press to **Escape Back** *(or **Exit**).*

•• Red Buttons Press to move **< Left , Right >.** Press to **– Decrease** *or* **+ Increase** values *or* to change settings.

• Black Button Press to **Enter Select** *(or '**OK**').*

STEP 1 Open the Back Box and locate the **8-Position Dip Switch** *(SW1 on the CPU/Sound Board).*

STEP 2 Switch Dip Switch **#8** to **'ON'**.
*(***BOOT FLASH EPROM** *must be installed.)*

STEP 3 Press the **White Reset Button** *(S1 RESET on the CPU/Sound Board) or* Power Cycle the game **OFF/ON**
(ON/OFF Switch is located on the outside of the cabinet bottom, front right).

STEP 4 Using the **4-Button Service Switch Set** *(inside the Coin Door):*

4A } Press **[SELECT]** to begin.
4B } With the "UPDT" *Icon highlighted,* press **[SELECT]**.
4C } Insert the Data Storage Device [w/latest file(s)] into the USB Port.
4D } *If more than one file is present on the Data Storage Device, press [<] or [>] to locate your file.* Press **[SELECT]** to update.
4E } Follow on-screen prompts.

CPU/Sound Board (S.A.M. System)

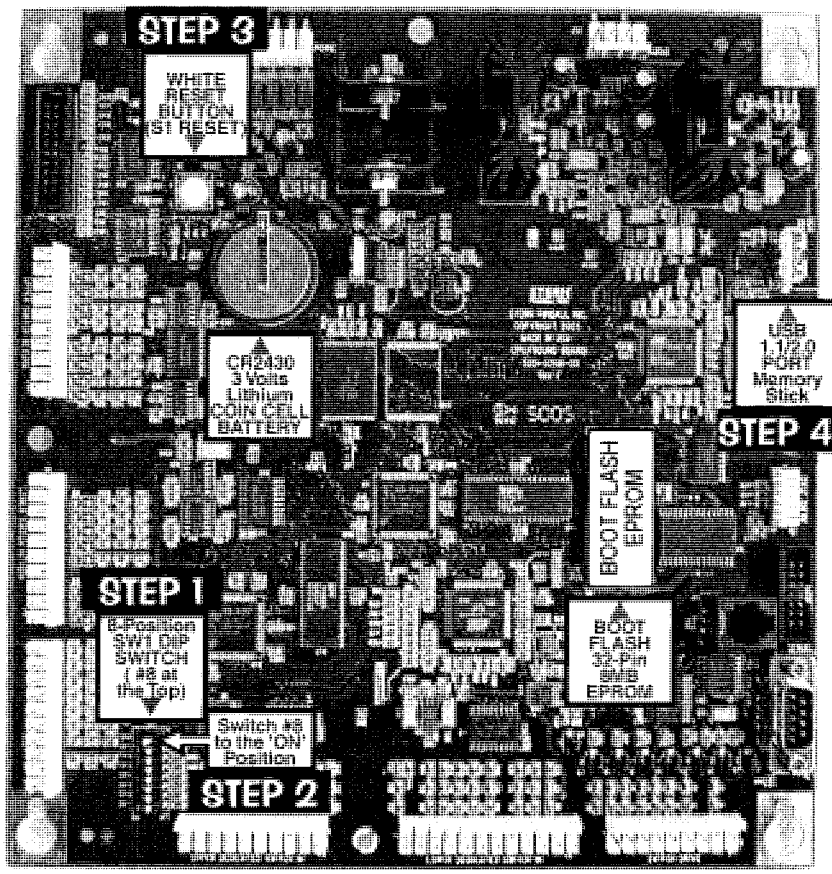

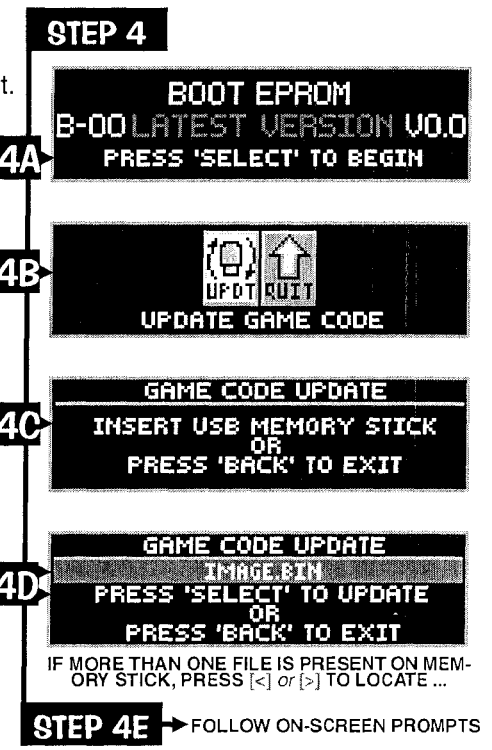

You can also retrieve your latest code from another game! From the **USB MENU** via the **UTILITIES MENU**, select the "BKUP" *Icon instead* and download to your Data Storage Device.

Quick Tip – *Try backing up your current code prior to installing your new code, just in case your Data Storage Device file was corrupted by a computer glitch while you were copying!*

Got confused? Comments? Questions? Call Technical Support at 800-542-5377 or 708-345-7700 (Option 1).

STERN® PINBALL, INC. LIMITED WARRANTY

Stern® Pinball, Inc., *("seller")* warrants only to the initial purchaser of its products that the items listed below are free from defects in material and workmanship under normal use and service for the ***warranty period specified:***

Printed Circuit Boards PCBs (game logic):	**2 months**
Dot Matrix Display PCB:	**9 months**

No other parts of seller's product are warranted. Warranty periods are effective from the initial date of shipment from seller to its authorized distributors.

Seller's sole liability shall be, at its option, to repair or replace products which are returned to seller during the warranty periods specified, provided:

1. *Seller is notified promptly upon discovery by purchaser that stated products are defective.*
2. *Such products are properly packaged and then returned freight prepaid, to seller's plant.*

This warranty does not apply to any parts damaged during shipment and/or due to improper handling, or due to improper installation or usage, or alteration. In no event shall the seller be liable for any anticipated profits, loss of profits, loss of use, accidental or consequential damages or any other losses incurred by the customer in connection with the purchase of a Stern® Pinball, Inc. product.

WARRANTY DISCLAIMER

Except as specifically provided in a written contract between seller and purchaser, there are no other warranties, express or implied, including any implied warranties of merchantability or fitness for a particular purpose.

CAUTIONS, WARNINGS & NOTICES

For safety and reliability, substitute parts and equipment modifications are not recommended *(and may void any warranties)*. Use of non-Stern® Pinball Inc. parts or modifications of game circuitry, may adversely affect game play, or may cause injuries. Transport pinball games with hinged backbox in the down position only! Always take great care when servicing any game. Always read the service manual before replacing or servicing components. **SUBSTITUTIONS OF PARTS OR EQUIPMENT MODIFICATIONS** may void FCC Type acceptance.

Always disconnect the line voltage before servicing. Some parts may still hold current when unplugged.

WARNING

This equipment generates, uses, and can radiate radio frequency energy, and if not installed and used in accordance with the instructions manual, may cause interference to radio communications. It has been tested and found to comply with the limits for a class a computing device pursuant to SUBPART J OF PART 15 OF FCC RULES, which are designed to provide reasonable protection against such interference when operated in a commercial environment. Operation of this equipment in a residential area is likely to cause interference in which case the user at his own expense will be required to take whatever measures may be required to correct the interference.

RF INTERFERENCE NOTICE: Cable harness placements and ground strap routing on this game have been designed to keep RF radiation and conduction within levels accepted by the FCC rules. To maintain these levels, reposition harnesses and reconnect ground straps to their original placements, if they become disconnected during maintenance.

(a) "The appliance has to be placed in a horizontal position."
(b) "This appliance is not to be cleaned by a *Water Jet*."

603335-7.12.1 (i) "Do not locate this appliance in an area where a *Water Jet* is used." **(ii)** "Do not clean this appliance with a *Water Jet*." **60335-7.12.5 (b)** If the supply cord is damaged, it must be replaced by the manufacturer, its service agent or similarly qualified persons in order to avoid a hazard.

IEC 60825-1 2ND EDITION AND WAS ISSUED IN 2007

NOTICES

THIS DOCUMENT AND THE DATA DISCLOSED HEREIN OR HEREWITH IS NOT TO BE REPRODUCED (EXCEPT WHERE NOTED), USED OR OTHERWISE DISCLOSED IN WHOLE OR IN PART TO ANYONE WITHOUT WRITTEN CONSENT OF STERN® PINBALL, INC. ***WARNING:*** PRODUCTS IN THIS MANUAL, THE COMPANY NAME AND DEVICES AND THE DESIGN OF THE MANUAL ITSELF, ARE PROTECTED BY FEDERAL PATENTS *(AND PATENTS PENDING)*, DESIGN REGISTRATIONS, TRADEMARKS AND COPYRIGHTS. ACTION WILL BE TAKEN IN THE EVENT OF INFRINGEMENT OR IMITATION. THE RIGHT IS RESERVED TO CHANGE SPECIFICATIONS WITHOUT PRIOR NOTICE.

© 2008 Manufactured by Stern® Pinball, Inc. Icon Designs, ToPS™ Logo, Bump N' Win™ Logo & all related indicia are trademarks of Stern® Pinball, Inc. All Rights Reserved. Manufactured in the USA.

"Multiball" is a registered trademark of Williams Electronics Games, Inc. Used by permission.

PCB Schematics *(Section 5, Chapter 4)* ©1995-2008 by CES (Creative Electronics & Software, Inc.) where noted.

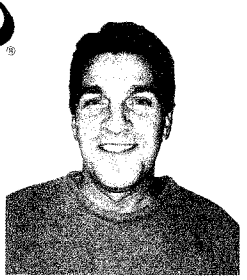

Patrick Powers
Director of Technical Support

Dorothy Brown
Part Sales Supervisor

Chas Siddiqi
Technical Support Engineer

Angel Hernandez
Shipping Clerk

SERVICE & SUPPORT

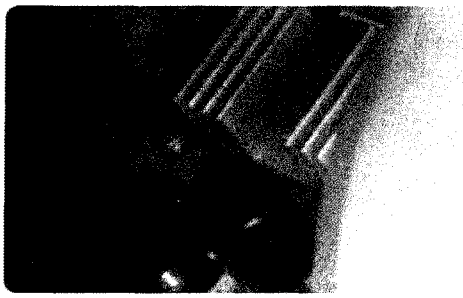

Service Bulletins

Click Here to view Our Service Bulletins

- Cautions, Warnings & Notices (Image file from the last page in Service Game Manual.)

Parts & Modifications

Click Here to view Our Full List of Schematics, Theory of Operation and Troubleshooting Tips.

- Current S.A.M. System Games complete Schematic Section
- Archived Drawings for the White Star Board System™

Manuals & Calculators

Click Here to view Our Coin Card Charts

- Offering a range of Coinage Cards for download
- Country Setting, Pricing Scheme, Dip Switch Setting
- New Default Pricing to USA 10 (for USA Games ONLY)
- Custom Pricing Demonstration (for S.A.M. System)

Game Code Library

Click Here to view Our Game Code Library

- Offering S.A.M. System Game Code
- Offering archived White Star Game Code for all Data East®, Sega™ and STERN® Pinballs (EPROM Programmer required)

Parts

Click Here to view Our Parts Information

- 2006 – 2008+ Complete Pinball Service Game Manuals in PDF Format available (includes parts and schematics).
- 2004 – 2005 Select Pinball Service Game Manual Excerpts only : Parts Identification & Location (The Pink Pages), Drawings for Major Assemblies & Ramps (The Blue Pages)
- Appendixes A – J (updated with each game)

Repair

- NTE Semi-Conductor Cross Reference
- Radio Shack Component Catalogue

Warranty

Check Here to fill out our online warranty card.

Tricks & Tips

Click Here to view Our Full List of Tricks & Tips

- Pinball Machine Foam Cushion Packing
- 1st Time Pinball Set-Up & Preventative Maintenance
- Pinball Location Maintenance
- How to Update Your Game Code (S.A.M. System)

U.S. Customary Inch Ruler

Games shipped factory direct to Europe from Stern Pinball, Inc. are CE approved and will have an "E" prefix attached to the Serial Number.

800-KICKERS
5 4 2 5 3 7 7

SPI Part Number
780-5OF2-00

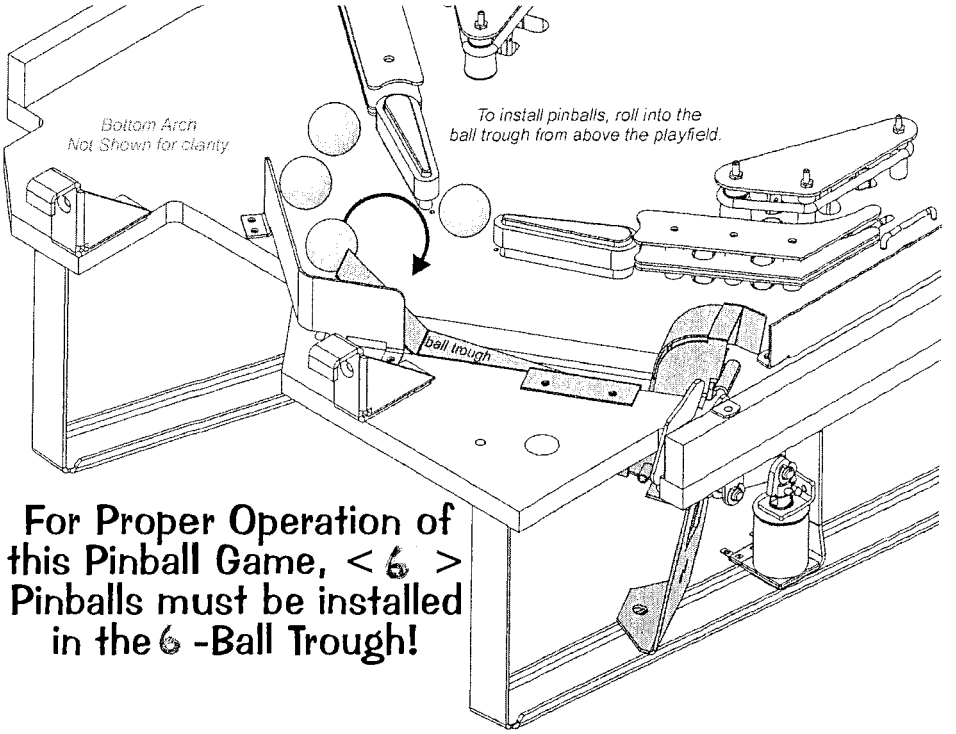

For Proper Operation of this Pinball Game, < 6 > Pinballs must be installed in the 6 -Ball Trough!

Backbox Fuses*, Cabinet Fuses, Playfield Fuses and Cabinet Switches

***Note:** *The CPU/Sound PCB does not have fuses.*

QUICK REFERENCE FUSE CHART

3/4A S.B. 200-5000-17 | 3A S.B. 200-5000-08 | 4A S.B. 200-5000-06 | 5A S.B. 200-5000-01 | 7A S.B. 200-5000-03 | 8A S.B. 200-5000-05

BACKBOX FUSES

I/O POWER DRIVER BOARD

with RED LED STATUS INDICATORS (if any RED LED is OFF, check the fuse)

F1	5A S.B.	5.7VAC~ G.I. Lamps	[BROWN-WHITE⇆WHT-BRN]
F2	5A S.B.	5.7VAC~ G.I. Lamps	[YELLOW⇆WHITE-YEL Circuit]
F3	5A S.B.	5.7VAC~ G.I. Lamps	[GREEN⇆WHITE-GRN Circuit]
F4	5A S.B.	5.7VAC~ G.I. Lamps	[VIOLET⇆WHITE-VIO Circuit]
F5	7A S.B.	50VDC Coils / Flippers	[48VAC *feed to* BRDG 1]
F6	3A S.B.	24VAC~ Motor or *Special Application*	
F7	4A S.B.	50VDC Magnet(s) or *Special Application*	
F8	3A S.B.	50VDC Coils	
F9	8A S.B.	18VDC Control Lamps	[13VAC *feed to* BRDG 4]
F10	5A S.B.	20VDC Coils / Flashers	[16VAC *feed to* BRDG 2]
F11	4A S.B.	5VDC Logic Power	[8VAC *feed to* BRDG 5]
F12	5A S.B.	12VDC Audio	[19VAC *feed to* BRDG 3]
F13	5A S.B.	12VDC Audio	[19VAC *feed to* BRDG 3]

CABINET FUSES

POWER (SERVICE OUTLET) BOX

(Access through Coin Door inside cabinet, Front Bottom)

8A S.B.	110-120V Main Line *US / Canada / Japan*
5A S.B.	220-240V Main Line *International*

PLAYFIELD FUSES

FLIPPER OR SPECIAL APPLICATION

(Coil Fuses are located under the playfield rear assembly.)

3A S.B.	50VDC R. Flipper [BLU-YEL⇆RED-YEL]
3A S.B.	50VDC L. Flipper [GRY-YEL⇆RED-YEL]
3A S.B.	50VDC *Additional Flipper Coil, if used*
3A S.B.	50VDC *Spcl. Application Coil, if used*

For location & more details on fuses, see Sec. 1, Chp. 2

ALL FUSES ARE 250V S.B. (SLO-BLO)
SEE FUSE CHARTS FOR AMP RATING
CAUTION: FOR CONTINUED PROTECTION AGAINST RISK OF FIRE, REPLACE ONLY WITH SAME TYPE FUSE WITH IDENTICAL ELECTRICAL RATING!

Stern Pinball®, Inc. ©2008 820-6384-00 Rev. C

Inside Coin Door

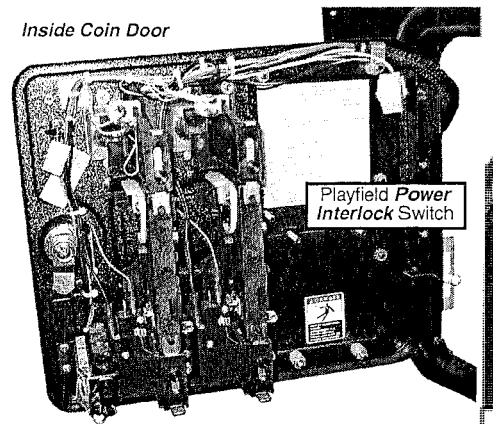

4-Button Switch Set:

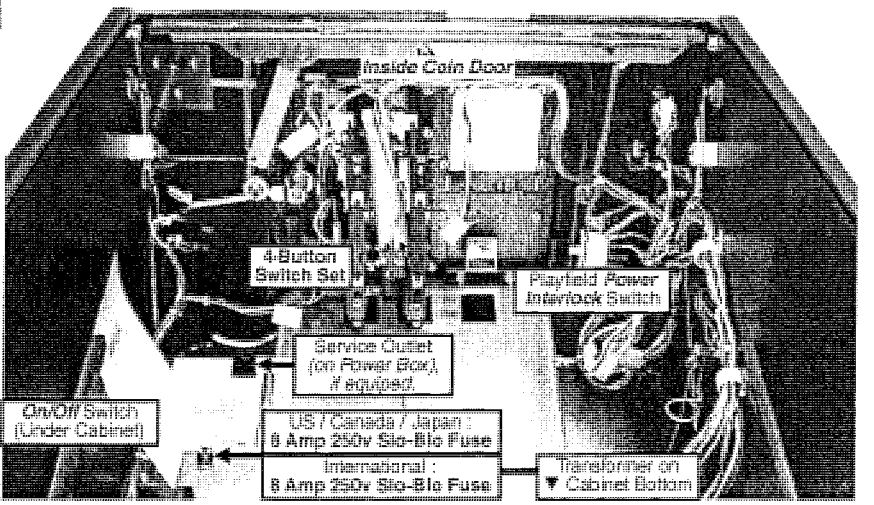

OPEN THE COIN DOOR TO ACCESS THE SERVICE SWITCH X4 SET.

● ● ● ● Service Switch X4 Set Overview

The four buttons *(inside Coin Door)* have dual functions depending if you have entered the **Service Menu** or not.

Functions in Game or Attract Mode

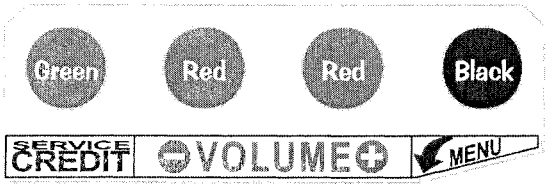

● Green Button	●● Red Buttons	● Black Button
Press for **Service Credit(s).**	Press for **Volume Adjustment** – *for less (quieter),* + *for more (louder)*	Press for **Service Menu** *entry.*

Functions in the Service Menu

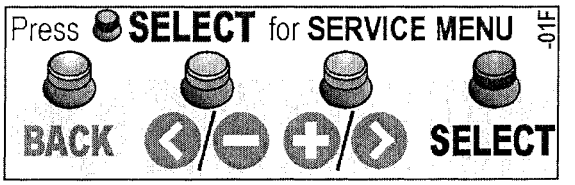

● Green Button	●● Red Buttons	● Black Button
Press to **Escape Back** *(or **Exit**).*	Press to move **< Left , Right >.** Press to **– Decrease** *or* **+ Increase** values *or* to change settings.	Press to **Enter Select** *(or **'OK'**).*

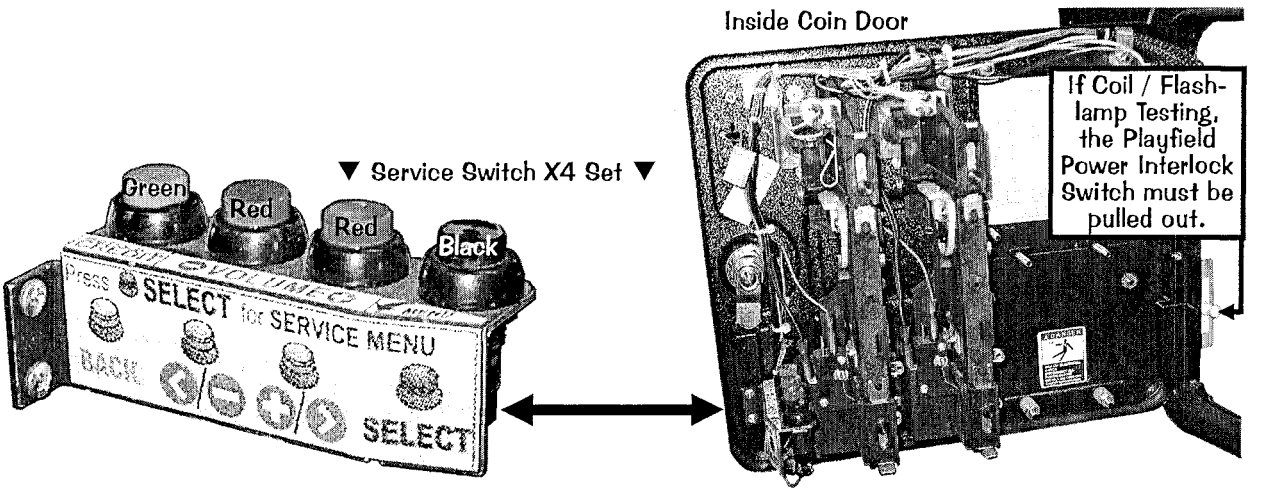

EXAMPLE:

To enter the **SERVICE MENU**, then enter the **SWITCH TEST MENU** via the **DIAGNOSTIC MENU**, perform the below steps.

Step 1 Press **[SELECT]**.

Step 2 With the "DIAG" *Icon* highlighted, press **[SELECT]**.

Step 3 With the "SW" *Icon* highlighted, press **[SELECT]**.

Step 4 With the "TEST" *Icon* highlighted, press **[SELECT]**.

Press any switch. If wired correctly, the information in the display will match the information in the Switch Matrix (see DR. 4).

Press [<] or [>] to move left or right through the menus.

Press [BACK] to go back a menu, exit or escape at any time.

Continue through the other menus.

The Service Menu is subject to change. Update this game with the latest code downloaded from out website with a USB Data Storage Device (64MB min., recommendation 128MB or higher). See the inside front cover for directions or in the Service Menu "Go To Utilities Menu" then "Go To USB Menu" and follow prompts.

DIAGNOSTIC AIDS

This ***audible / visual alert display*** is shown when the **50V / 20V Power** is disabled *(by opening the Coin Door).* PULL OUT THE INTERLOCK SWITCH ONLY WHILE IN THE SERVICE MENU FOR COIL, SWITCH OR PLAY TESTING WHEN THE COIN DOOR IS REQUIRED TO STAY OPEN FOR SERVICE BUTTON USE! Pulling out the Power Interlock Switch or pressing the 'escape' **Green [BACK] Button** will remove the alert display. Initial display presentation is accompanied by 3 audible tones *(the bright display warning will go dim after approximately 30 seconds).*

This ***alert display*** is shown momentarily during **Game Mode** or **Power-Up** to alert the operator of a device malfunction *(device or mechanism doesn't energize or is energized repeatedly).* **OPERATOR ALERT!** works by monitoring any *switch activated device* that has the potential to trap a ball when disabled *(e.g. in the Shooter Lane, Scoop or Eject Holes, etc.).* This alert can also appear if a switch associated with a device *(e.g. Ball Trough, Auto Plunger, etc.)* is stuck closed *(caused by a switch jam or stuck ball)*; the game will activate the device a predetermined number of times and if the problem is still detected, this device *or* switch will be noted in **Switch Alerts** *and/or* **Technician Alerts**.

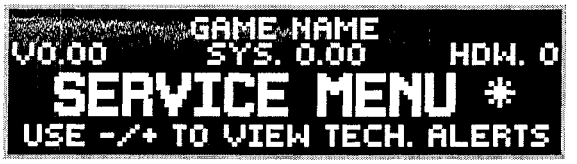

Upon entering the **SERVICE MENU**, if an asterisk " * " is displayed after the words "SERVICE MENU," the game has detected possible faulty devices, switches and/or missing pinballs. Press the either of the **Red Buttons** *(short-cut to the TECHNICIAN ALERTS MENU) or* continue into the **SERVICE MENU** *(press the **Black Button** again),* select the "DIAG" *Icon* and "TECH" *Icon* for the **Technician Alerts** information.

CPU DIP SWITCH SETTINGS

The 8-Pos. Dip Switch [SW1] is on the CPU/Sound Board (between Conn. J3 & J13, lower left corner)

CPU COUNTRY SETTING:	Pos.	1	2	3	4	5	6	7	8
USA	ON								
	OFF	▼	▼	▼	▼	▼	▼	▼	▼

CPU COUNTRY SETTING:	Pos.	1	2	3	4	5	6	7	8
Australia	ON	▲			▲	▲			
	OFF		▼				▼	▼	▼

CPU COUNTRY SETTING:	Pos.	1	2	3	4	5	6	7	8
Austria	ON	▲							
	OFF		▼	▼	▼	▼	▼	▼	▼

CPU COUNTRY SETTING:	Pos.	1	2	3	4	5	6	7	8
Belgium	ON		▲						
	OFF	▼		▼	▼	▼	▼	▼	▼

CPU COUNTRY SETTING:	Pos.	1	2	3	4	5	6	7	8
Canada 1	ON	▲	▲						
	OFF			▼	▼	▼	▼	▼	▼

CPU COUNTRY SETTING:	Pos.	1	2	3	4	5	6	7	8
Canada 2	ON		▲		▲	▲			
	OFF	▼		▼			▼	▼	▼

CPU COUNTRY SETTING:	Pos.	1	2	3	4	5	6	7	8
Croatia	ON		▲	▲		▲			
	OFF	▼			▼		▼	▼	▼

CPU COUNTRY SETTING:	Pos.	1	2	3	4	5	6	7	8
Denmark	ON	▲			▲				
	OFF		▼	▼		▼	▼	▼	▼

CPU COUNTRY SETTING:	Pos.	1	2	3	4	5	6	7	8
Finland	ON	▲		▲					
	OFF		▼		▼	▼	▼	▼	▼

CPU COUNTRY SETTING:	Pos.	1	2	3	4	5	6	7	8
France	ON		▲	▲					
	OFF	▼			▼	▼	▼	▼	▼

CPU COUNTRY SETTING:	Pos.	1	2	3	4	5	6	7	8
Germany	ON	▲	▲	▲					
	OFF				▼	▼	▼	▼	▼

CPU COUNTRY SETTING:	Pos.	1	2	3	4	5	6	7	8
Greece	ON	▲	▲	▲	▲				
	OFF					▼	▼	▼	▼

CPU COUNTRY SETTING:	Pos.	1	2	3	4	5	6	7	8
Italy	ON				▲				
	OFF	▼	▼	▼		▼	▼	▼	▼

CPU COUNTRY SETTING:	Pos.	1	2	3	4	5	6	7	8
Japan	ON	▲		▲		▲			
	OFF		▼		▼		▼	▼	▼

CPU COUNTRY SETTING:	Pos.	1	2	3	4	5	6	7	8
Lithuania	ON	▲	▲		▲	▲			
	OFF			▼			▼	▼	▼

CPU COUNTRY SETTING:	Pos.	1	2	3	4	5	6	7	8
Middle East	ON	▲	▲	▲		▲			
	OFF				▼		▼	▼	▼

CPU COUNTRY SETTING:	Pos.	1	2	3	4	5	6	7	8
Netherlands	ON			▲					
	OFF	▼	▼		▼	▼	▼	▼	▼

CPU COUNTRY SETTING:	Pos.	1	2	3	4	5	6	7	8
New Zealand	ON					▲			
	OFF	▼	▼	▼	▼		▼	▼	▼

CPU COUNTRY SETTING:	Pos.	1	2	3	4	5	6	7	8
Norway	ON		▲		▲				
	OFF	▼		▼		▼	▼	▼	▼

CPU COUNTRY SETTING:	Pos.	1	2	3	4	5	6	7	8
Portugal	ON	▲				▲			
	OFF		▼	▼	▼		▼	▼	▼

CPU COUNTRY SETTING:	Pos.	1	2	3	4	5	6	7	8
Russia	ON	▲			▲	▲			
	OFF		▼	▼			▼	▼	▼

CPU COUNTRY SETTING:	Pos.	1	2	3	4	5	6	7	8
So. Africa	ON			▲		▲			
	OFF	▼	▼		▼		▼	▼	▼

CPU COUNTRY SETTING:	Pos.	1	2	3	4	5	6	7	8
Spain	ON		▲			▲			
	OFF	▼		▼	▼		▼	▼	▼

CPU COUNTRY SETTING:	Pos.	1	2	3	4	5	6	7	8
Sweden	ON	▲	▲		▲				
	OFF			▼		▼	▼	▼	▼

CPU COUNTRY SETTING:	Pos.	1	2	3	4	5	6	7	8
Switzerland	ON			▲	▲				
	OFF	▼	▼			▼	▼	▼	▼

CPU COUNTRY SETTING:	Pos.	1	2	3	4	5	6	7	8
Taiwan	ON				▲	▲			
	OFF	▼	▼	▼			▼	▼	▼

CPU COUNTRY SETTING:	Pos.	1	2	3	4	5	6	7	8
UK	ON		▲	▲	▲				
	OFF	▼				▼	▼	▼	▼

CPU/SND PCB SETTING:	Pos.	1	2	3	4	5	6	7	8
UPDATE CODE	ON								▲
	OFF	▼	▼	▼	▼	▼	▼	▼	

Note: *Slide Dip Switch 8 to Position **ON** (with Dip Switches 1-7 in the **OFF** Position) only to reboot the game with the latest version BOOT EPROM installed at **U9** on the CPU/Sound Board (S.A.M. System only). Currently, this is also the procedure to update your game with the latest software code update file. For the latest version, visit our website. If you have questions about updating your game code, call Technical Support for assistance.*

SWITCH MATRIX GRID [#1 - #64] {Switch Locations : next page}

CPU/ Sound Board	01 IC-U22A	02 IC-U22B	03 IC-U22C	04 IC-U22D	05 IC-U16A	06 IC-U16B	07 IC-U16C	08 IC-U16D	09 IC-U36A	10 IC-U36B	11 IC-U36C	12 IC-U36D	13 IC-U40A	14 IC-U40B	15 IC-U40C	16 IC-U40D
	RETURN▲	RETURN▲	RETURN▲	RETURN▲	RETURN▲	RETURN▲	RETURN▲	RETURN▲	RETURN▲	RETURN▲	RETURN▲	RETURN▲	RETURN▲	RETURN▲	RETURN▲	RETURN▲
	WHT-BRN J6-P9	WHT-RED J6-P8	WHT-ORG J6-P7	WHT-YEL J6-P6	WHT-GRN J6-P5	WHT-BLU J6-P3	WHT-VIO J6-P2	WHT-GRY J6-P1	TAN-BLK J12-P9	TAN-RED J12-P8	TAN-ORG J12-P7	TAN-YEL J12-P6	TAN-GRN J12-P4	TAN-BLU J12-P3	TAN-VIO J12-P2	TAN-WHT J12-P1
01 Q1 DRIVE ▶ GRN-BRN J1-P1	S.W. #1 RT 3 BANK TARG (BOT) 515-7568-02 BELOW P.F	S.W. #2 RT 3 BANK TARG (CEN) 515-7568-02 BELOW P.F.	S.W. #3 RT 3 BANK TARG (TOP) 515-7568-02 BELOW P.F	S.W. #4 N20 TARGET (RT) 515-7581-09 BELOW P.F	S.W. #5 N20 TARGET CEN 515-7581-09 BELOW P.F	S.W. #6	S.W. #7	S.W. #8 CAPTIVE BALL (BACK) 500-6227-04 BELOW P.F	S.W. #9 CAPTIVE BALL (FRNT) 500-6227-04 BELOW P.F	S.W. #10 SKILL SHOT 500-6227-04 BELOW P.F	S.W. #11 OUTER RT. TOP LN. 500-6227-04 BELOW P.F	S.W. #12 INNER RT. TOP LN. 500-6227-03 BELOW P.F	S.W. #13 INNER LT. TOP LN. 500-6227-03 BELOW P.F	S.W. #14 OUTER LF. TOP LN. 500-6227-03 BELOW P.F.	S.W. #15 TOURN START 180-5174-00 IN CABINET	S.W. #16 START 180-5174-00 IN CABINET
02 Q2 DRIVE ▶ GRN-RED J1-P3	S.W. #17 TROUGH # 6 (L) 180-5119-02 BELOW P.F	S.W. #18 TROUGH # 5 180-5119-02 BELOW P.F	S.W. #19 TROUGH # 4 180-5119-02 BELOW P.F	S.W. #20 TROUGH # 3 180-5119-02 BELOW P.F	S.W. #21 TROUGH # 2 180-5119-02 BELOW P.F	S.W. #22 TROUGH # 1 515-0173-00 515-0174-00	S.W. #23 TROUGH JAM 515-0173-00 515-0174-00	S.W. #24 LEFT OUTLANE 500-6227-03 BELOW P.F	S.W. #25 L. RETURN LANE (L) 500-6227-04 BELOW P.F	S.W. #26 LEFT SLINGSHOT 180-5054-00 BELOW P.F	S.W. #27 RIGHT SLINGSHOT 180-5054-00 BELOW P.F	S.W. #28 RIGHT RETURN LANE 500-6227-03 BELOW P.F	S.W. #29 RIGHT OUTLANE 500-6227-03 BELOW P.F	S.W. #30 LEFT POP BUMPER 180-5015-04 BELOW P.F	S.W. #31 RIGHT POP BUMPER 180-5015-04 BELOW P.F	S.W. #32 BOTTOM POP BUMPER 180-5015-04 BELOW P.F
03 Q3 DRIVE ▶ GRN-ORG J1-P4	S.W. #33 TOP POP BUMPER 180-5015-04 BELOW P.F	S.W. #34 (G)EARS 520-5252-03 BELOW P.F	S.W. #35 G(E)ARS 520-5252-03 BELOW P.F	S.W. #36 GE(A)RS 520-5252-03 BELOW P.F	S.W. #37 GEA(R)S 520-5252-02 BELOW P.F	S.W. #38 GEAR(S) 520-5252-02 BELOW P.F	S.W. #39 MID RAMP EXIT 500-6775-01 ABOVE P.F	S.W. #40 UPPER RAMP EXIT 500-6775-01 ABOVE P.F	S.W. #41 SHIFT TARGET (LT) 515-7498-02-01 BELOW P.F	S.W. #42 SHIFT TARGET (RT) 515-7498-05-00 BELOW P.F	S.W. #43 RIGHT SCOOP 180-5183-00 BELOW P.F	S.W. #44 RIGHT ORBIT 500-6227-03 BELOW P.F	S.W. #45 LEFT ORBIT 500-6227-03 BELOW P.F	S.W. #46 BOWL SWITCH 180-5057-00 ABOVE P.F	S.W. #47 SHOOTER LANE 180-5157-00 BELOW P.F	S.W. #48 SPINNER 180-5010-04 ABOVE P.F
04 Q4 DRIVE ▶ GRN-YEL J1-P5	S.W. #49	S.W. #50	S.W. #51	S.W. #52 TURNTABLE INDEX 520-6931-00 ABOVE P.F	S.W. #53 TURNTABLE HOME 520-6931-00 ABOVE P.F	S.W. #54 LEFT LANE TARGET 515-7568-09 BELOW P.F	S.W. #55 N20 TARGET (LT) 515-7581-09 BELOW P.F	S.W. #56 RT. 1- BANK DROP TRGT 520-5252-01 BELOW P.F	S.W. #57 LT.1- BANK DROP TRGT 520-5252-01 BELOW P.F	S.W. #58	S.W. #59	S.W. #60	S.W. #61	S.W. #62	S.W. #63	S.W. #64

« FOR MORE ABOUT DIODE ON TERMINAL STRIPS «D.O.T.S.», SEE SECTION 5, CHAPTER 2, PAGES 104-105 »

Wire Color Abbreviations used: ▲▼ BLK Black, BLU Blue, BRN Brown, GRY Gray, GRN Green, LGN Light Grn.n, ORG Orange, PNK Pink, RED Red, TAN Tan, VIO Violet, WHT White, YEL Yellow

Dedicated Switches [#D-1 - #D-32] {Dedicated Switch Locations : next page}

CPU/SND Board	IC-U2	IC-U2	IC-U2	IC-U2	IC-U2	IC-U2	IC-U2	IC-U2	IC-U4	IC-U4	IC-U4	IC-U4	IC-U4	IC-U4	IC-U4	IC-U4
GROUND (BLK) J2-P1/11 & J3-P10	S.W. D-1 LEFT COIN SLOT 180-5204-00 COIN DOOR	S.W. D-2 CENTER COIN SLOT DBA COIN DOOR	S.W. D-3 RIGHT COIN SLOT 180-5204-00 COIN DOOR	S.W. D-4 FORTH COIN SLOT 180-5204-00 COIN DOOR	S.W. D-5 FIFTH COIN SLOT IF USED	S.W. D-6	S.W. D-7 ACTION 180-5218-00 CABINET	S.W. D-8	S.W. D-9 LEFT FLIPPER BUTTON 500-6889-01 CABINET	S.W. D-10 LEFT FLIPPER E.O.S. 180-5149-00 FLIP ASSY.	S.W. D-11 RIGHT FLIPPER BUTTON 500-6890-01 CABINET	S.W. D-12 RIGHT FLIPPER E.O.S. 180-5149-00 FLIP ASSY.	S.W. D-13	S.W. D-14	S.W. D-15	S.W. D-16

CPU/SND Board	IC-41	IC-41	IC-41	IC-41	IC-41	IC-41	IC-41	IC-41
GROUND (BLK) J13-P10	S.W. D-17 TILT PENDULUM CABINET	S.W. D-18 SLAM TILT IF USED	S.W. D-19 TICKET NOTCH IF USED	S.W. D-20	S.W. D-21 BACK (GREEN) 180-5192-04 COIN DOOR	S.W. D-22 MINUS (RED) 180-5192-02 COIN DOOR	S.W. D-23 PLUS (RED) 180-5192-02 COIN DOOR	S.W. D-24 SELECT (BLACK) 180-5192-00 COIN DOOR

CPU/SOUND BD. SW1 DIP SWITCH *(located between Connectors J3/J13)*

S.W. D-25	S.W. D-26	S.W. D-27	S.W. D-28	S.W. D-29	S.W. D-30	S.W. D-31	S.W. D-32
DIP (1)2345678	DIP 1(2)345678	DIP 12(3)45678	DIP 123(4)5678	DIP 1234(5)678	DIP 12345(6)78	DIP 123456(7)8	DIP 1234567(8)
S.W. POS. #1 ON	S.W. POS. #2 ON	S.W. POS. #3 ON	S.W. POS. #4 ON	S.W. POS. #5 ON	S.W. POS. #6 ON	S.W. POS. #7 ON	S.W. POS. #8 ON

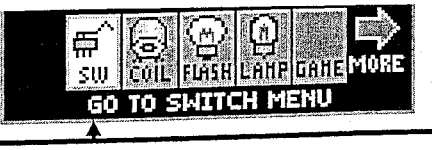

SWITCH MENU: SWITCH, ACTIVE, SINGLE & SERVICE

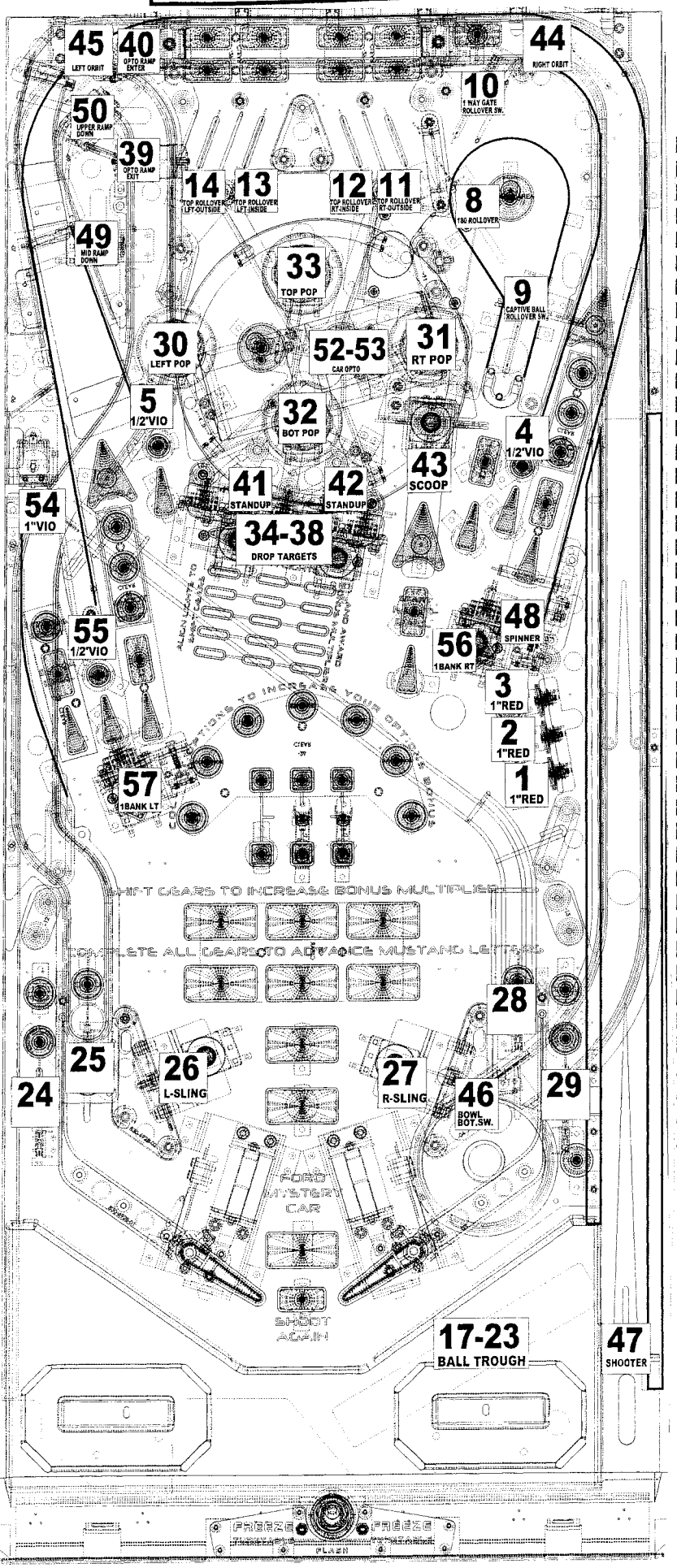

Typical Switch Wiring & Schematic

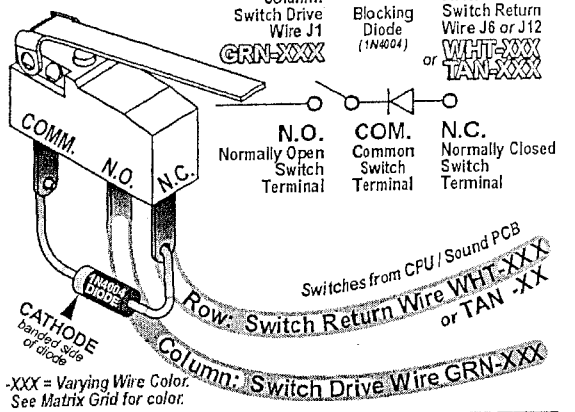

-XXX = Varying Wire Color.
See Matrix Grid for color.

Dedicated Switch Schematic

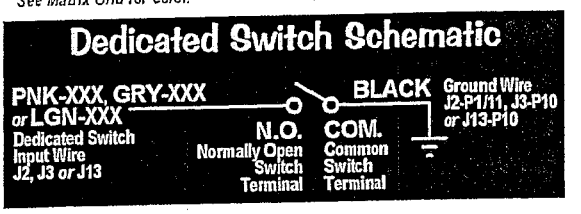

Typical Switch Wiring & Schematic

... with Switch Diode on a Terminal Strip (DOTS)

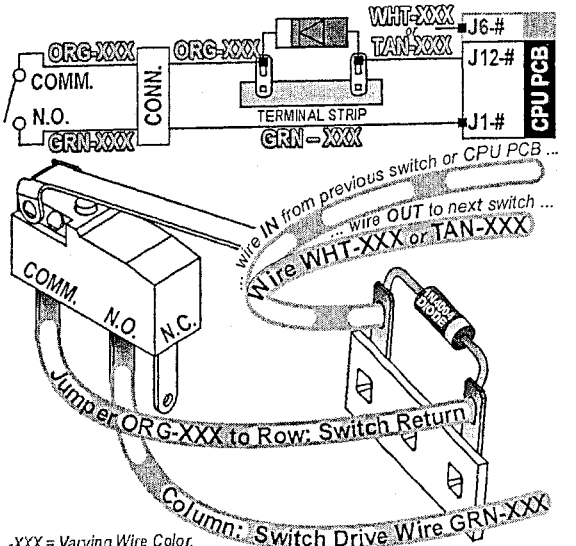

-XXX = Varying Wire Color.
See Matrix Grid for color.

LAMP MATRIX GRID [#1 - #80] {Lamp Locations : next page}

I / O Power Driver Board	01 IC-U17	02 IC-U16	03 IC-U15	04 IC-U14	05 IC-U13	06 IC-U12	07 IC-U11	08 IC-U10
	18VDC	18VDC	18VDC	18VDC	18VDC	18VDC	18VDC	18VDC
	YEL-BRN J13-P9	YEL-RED J13-P8	YEL-ORG J13-P7	YEL-BLK J13-P6	YEL-GRN J13-P5	YEL-BLU J13-P4	YEL-VIO J13-P3	YEL-GRY J13-P1
01 Q33 GROUND RED-BRN J12-P1	LED L.P. #1 START BUTTON 112-5033-08	LED L.P. #2 TOURN BUTTON 112-5033-08	L.P. #3	L.P. #4	L.P. #5	L.P. #6	L.P. #7	L.P. #8
02 Q34 GROUND RED-BLK J12-P2	LED L.P. #9 MUSTAN(G) 112-5033-08	LED L.P. #10 MUSTA(N)G 112-5033-08	LED L.P. #11 MUST(A)NG 112-5033-08	LED L.P. #12 MUS(T)ANG 112-5033-08	LED L.P. #13 MU(S)TANG 112-5033-08	LED L.P. #14 M(U)STANG 112-5033-08	LED L.P. #15 (M)USTANG 112-5033-08	LED L.P. #16 PONY TOP LANE # 4 112-5033-08
03 Q35 GROUND RED-ORG J12-P3	LED L.P. #17 PONY TOP LANE # 3 112-5033-08	LED L.P. #18 PONY TOP LANE # 2 112-5033-08	LED L.P. #19 PONY TOP LANE # 1 112-5033-08	LED L.P. #20 FORD TOP LANE # 1 (L) 112-503308	LED L.P. #21 FORD TOP LANE # 2 112-5033-08	LED L.P. #22 FORD TOP LANE # 3 112-5033-08	LED L.P. #23 FORD TOP LANE # 4 112-5033-08	LED L.P. #24 N20 (CENTER) 112-5033-08
04 Q36 GROUND RED-YEL J12-P4	LED L.P. #25 JACKPOT (RIGHT) 112-5033-08	LED L.P. #26 RIGHT ORBIT (GREEN) 112-5033-08	LED L.P. #27 RIGHT ORBIT (YELLOW) 112-5033-08	LED L.P. #28 RIGHT ORBIT (RED) 112-5033-08	LED L.P. #29 MULTIBALL 112-5033-08	LED L.P. #30 1-BANK DROP TARGET (R) 112-5033-08	LED L.P. #31 JACKPOT (CENTER) 112-5033-08	LED L.P. #32 N20 (RIGHT) 112-5033-08
05 Q37 GROUND RED-GRN J12-P5	LED L.P. #33 RIGHT 3-BANK (TOP) 112-5033-08	LED L.P. #34 RIGHT 3-BANK (CENTER) 112-5033-08	LED L.P. #35 RIGHT 3-BANK (BOTTOM) 112-5033-08	LED L.P. #36 RIGHT RETURN LANE 112-5033-08	LED L.P. #37 RIGHT OUTLANE 112-5033-08	LED L.P. #38 RIGHT SPECIAL 112-5033-08	LED L.P. #39 LEFT OUTLANE (TOP) 112-5033-08	LED L.P. #40 LEFT RETURN LANE 112-5033-08
06 Q38 GROUND RED-BLU J12-P6	LED L.P. #41 LEFT SPECIAL 112-5033-08	LED L.P. #42 EXTRA BALL 112-5033-08	LED L.P. #43 N20 BOOST 112-5033-08	LED L.P. #44 LEFT ORBIT (RED) 112-5033-08	LED L.P. #45 LEFT ORBIT (YELLOW) 112-5033-08	LED L.P. #46 LEFT ORBIT (GREEN) 112-5033-08	LED L.P. #47 JACKPOT (LEFT) 112-5033-08	LED L.P. #48 N20 (LEFT) 112-5033-08
07 Q39 GROUND RED-VIO J12-P8	LED L.P. #49 1-BANK DROP TARGET (L) 112-5033-08	LED L.P. #50 2015 MUSTANG 112-5033-08	LED L.P. #51 2012 MUSTANG 112-5033-08	LED L.P. #52 1968 MUSTANG 112-5033-08	LED L.P. #53 1970 MUSTANG 112-5033-08	LED L.P. #54 2011 MUSTANG 112-5033-08	LED L.P. #55 1965 MUSTANG 112-5033-08	LED L.P. #56 1969 MUSTANG 112-5033-08
08 Q40 GROUND RED-GRY J12-P9	LED L.P. #57 2000 MUSTANG 112-5033-08	LED L.P. #58 NITROUS UPGRADE 112-5033-08	LED L.P. #59 BODY MODS 112-5033-08	LED L.P. #60 DRIVE TRAIN UPGRADE 112-5033-08	LED L.P. #61 ENGINE UPGRADE 112-5033-08	LED L.P. #62 TIRE UPGRADE 112-5033-08	LED L.P. #63 HANDLING UPGRADE 112-5033-08	LED L.P. #64 TECH UPGRADE 112-5033-08
09 Q41 GROUND RED-WHT J12-P10	LED L.P. #65 1ST GEAR 112-5033-04	LED L.P. #66 3RD GEAR 112-5033-04	LED L.P. #67 5TH GEAR 112-5033-04	LED L.P. #68 2ND GEAR 112-5033-04	LED L.P. #69 4TH GEAR 112-5033-04	LED L.P. #70 6TH GEAR 112-5033-04	L.P. #71	L.P. #72
10 Q42 GROUND RED J12-P11	LED L.P. #73 SHOOT AGAIN 112-5033-08	L.P. #74	L.P. #75	L.P. #76	LED L.P. #77 TOP POP BUMPER 112-5033-02	LED L.P. #78 LEFT POP BUMPER 112-5033-02	LED L.P. #79 BOTTOM POP BUMPER 112-5033-02	LED L.P. #80 RIGHT POP BUMPER 112-5033-02

LAMPS 50–57 PREMIUM ONLY

#50	#51	#52	#53	#54	#55	#56	#57
2013 BOSS 302	2012 BOSS 302	1969 BOSS 302 (BOTTOM)	1970 BOSS 302	2011 BOSS 302 R	1969 BOSS 302 (TOP)	1970 BOSS 429	1971 BOSS 351

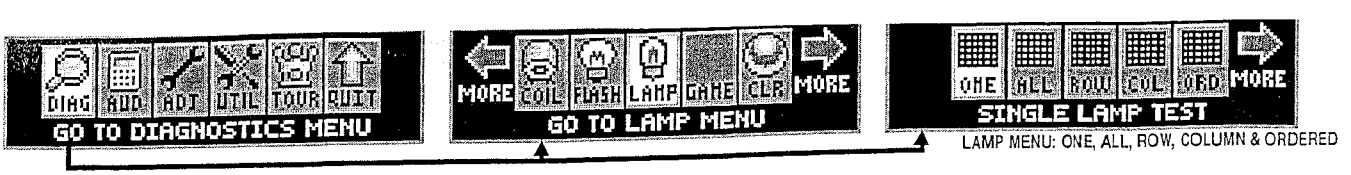

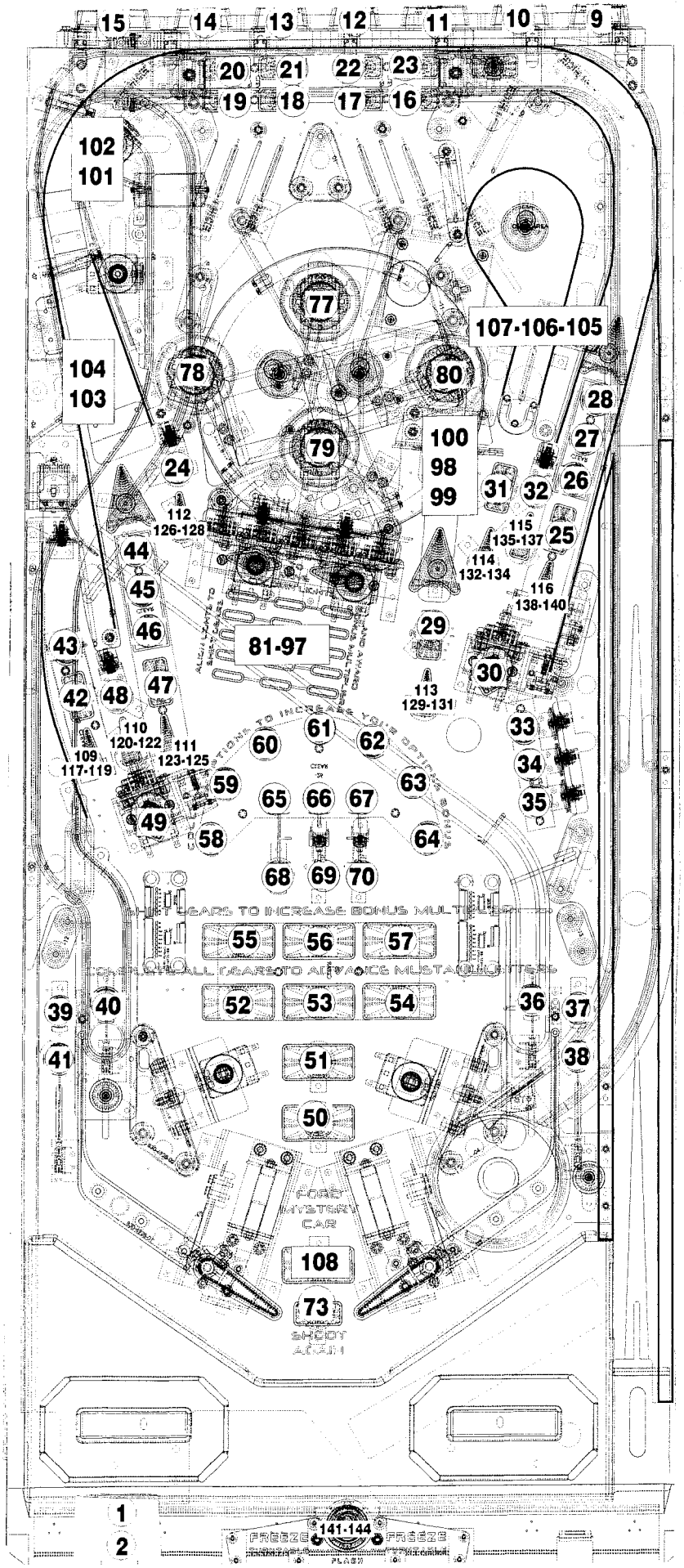

Typical Lamp Wiring & Schematic

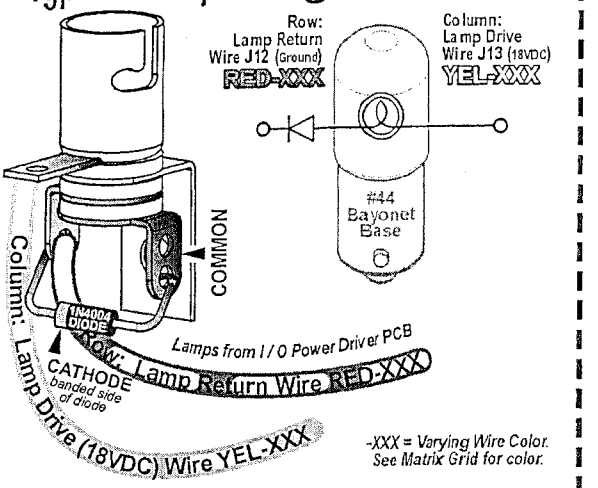

-XXX = Varying Wire Color.
See Matrix Grid for color.

Typical Lamp Wiring & Schematic

... with Lamp Diode on a Terminal Strip (DOTS)

Usually when an LED Module is used as a Controlled Lamp for a Pop Bumper.

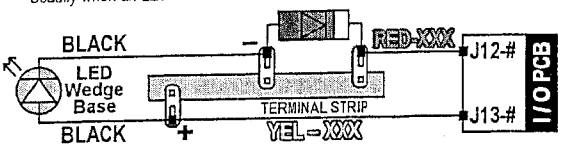

... with Lamp Diode on a Terminal Strip (DOTS)

Usually when a #555 Bulb is used as a Controlled Lamp for a Spot Light.

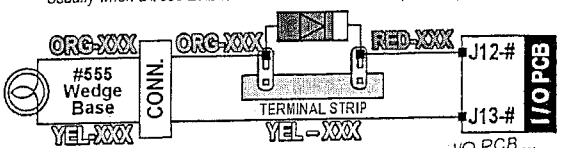

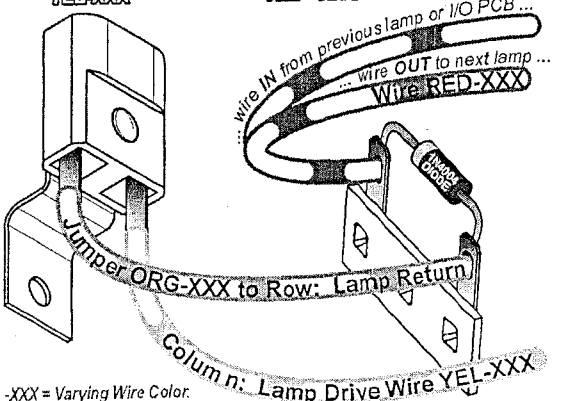

-XXX = Varying Wire Color.
See Matrix Grid for color.

LAMP	NAME	BOARD	COMPONENT	TYPE	LOCATION	BOARD PART#
81	GRID RED 1	5	D37	White	PF	520-6822-00A
82	GRID RED 2	5	D38	White	PF	520-6822-00A
83	GRID RED 3	5	D39	White	PF	520-6822-00A
84	GRID RED 4	5	D40	White	PF	520-6822-00A
85	GRID RED 5	5	D41	White	PF	520-6822-00A
86	GRID WHITE 1	5	D42	White	PF	520-6822-00A
87	GRID WHITE 2	5	D43	White	PF	520-6822-00A
88	GRID WHITE 3	5	D44	White	PF	520-6822-00A
89	GRID WHITE 4	5	D45	White	PF	520-6822-00A
90	GRID WHITE 5	5	D46	White	PF	520-6822-00A
91	GRID BLUE 1	5	D47	White	PF	520-6822-00A
92	GRID BLUE 2	5	D48	White	PF	520-6822-00A
93	GRID BLUE 3	5	D49	White	PF	520-6822-00A
94	GRID BLUE 4	5	D50	White	PF	520-6822-00A
95	GRID BLUE 5	5	D51	White	PF	520-6822-00A
96	SHIFT RIGHT TARGET	5	D52	White	PF	520-6822-00A
97	SHIFT LEFT TARGET	5	D53	White	PF	520-6822-00A
98	TOOLBOX	5	CN19-P2	Red	Sign	112-5034-02
99	NEW CAR	5	CN19-P3	Yel	Sign	112-5034-06
100	UPGRADE	5	CN19-P1	White	Sign	112-5034-08
101	360 BOTTOM	5	CN20-P2	Red	Sign	112-5034-02
102	360 TOP	5	CN20-P3	Red	Sign	112-5034-02
103	SHOOT COMBO JACKPOT	5	CN20-P4	Blue	Sign	112-5034-05
104	SHORT CUT	5	CN20-P5	Green	Sign	112-5034-04
105	18(0)	5	CN20-P6	Org	Sign	112-5034-07
106	1(8)0	5	CN20-P7	Org	Sign	112-5034-07
107	(1)80	5	CN20-P8	Org	Sign	112-5034-07
108	MYSTERY FORD	5	CN20-P9	White	PF	520-5307-00
109	SHOT ARROW #1	5A	CN3	White	PF	520-5333-00
110	SHOT ARROW #2	5A	CN3	White	PF	520-5333-00
111	SHOT ARROW #3	5A	CN3	White	PF	520-5333-00
112	SHOT ARROW #4	5A	CN2	White	PF	520-5333-00
113	SHOT ARROW #5	5B	CN3	White	PF	520-5333-00
114	SHOT ARROW #6	5B	CN2	White	PF	520-5333-00
115	SHOT ARROW #7	5B	CN2	White	PF	520-5333-00
116	SHOT ARROW #8	5B	CN3	White	PF	520-5333-00
117	SHOT ARROW #1 Red	5A	CN3-1	Red	PF	520-5333-00
118	SHOT ARROW #1 Green	5A	CN3-3	Green	PF	520-5333-00
119	SHOT ARROW #1 Blue	5A	CN3-2	Blue	PF	520-5333-00
120	SHOT ARROW #2 Red	5A	CN3-4	Red	PF	520-5333-00
121	SHOT ARROW #2 Green	5A	CN3-6	Green	PF	520-5333-00
122	SHOT ARROW #2 Blue	5A	CN3-5	Blue	PF	520-5333-00
123	SHOT ARROW #3 Red	5A	CN3-7	Red	PF	520-5333-00
124	SHOT ARROW #3 Green	5A	CN3-9	Green	PF	520-5333-00
125	SHOT ARROW #3 Blue	5A	CN3-8	Blue	PF	520-5333-00

LAMP	NAME	BOARD	COMPONENT	TYPE	LOCATION	BOARD PART#
126	SHOT ARROW #4 Red	5A	CN2-1	Red	PF	520-5333-00
127	SHOT ARROW #4 Green	5A	CN2-3	Green	PF	520-5333-00
128	SHOT ARROW #4 Blue	5A	CN2-2	Blue	PF	520-5333-00
129	SHOT ARROW #5 Red	5B	CN3-4	Red	PF	520-5333-00
130	SHOT ARROW #5 Green	5B	CN3-6	Green	PF	520-5333-00
131	SHOT ARROW #5 Blue	5B	CN3-5	Blue	PF	520-5333-00
132	SHOT ARROW #6 Red	5B	CN2-1	Red	PF	520-5333-00
133	SHOT ARROW #6 Green	5B	CN2-3	Green	PF	520-5333-00
134	SHOT ARROW #6 Blue	5B	CN2-2	Blue	PF	520-5333-00
135	SHOT ARROW #7 Red	5B	CN2-4	Red	PF	520-5333-00
136	SHOT ARROW #7 Green	5B	CN2-6	Green	PF	520-5333-00
137	SHOT ARROW #7 Blue	5B	CN2-5	Blue	PF	520-5333-00
138	SHOT ARROW #8 Red	5B	CN3-7	Red	PF	520-5333-00
139	SHOT ARROW #8 Green	5B	CN3-9	Green	PF	520-5333-00
140	SHOT ARROW #8 Blue	5B	CN3-8	Blue	PF	520-5333-00
141	Action Button	5B	CN3	White	Cab.	520-5333-00
142	Action Button Red	5B	CN3-1	Red	Cab.	520-5333-00
143	Action Button Green	5B	CN3-3	Green	Cab.	520-5333-00
144	Action Button Blue	5B	CN3-2	Blue	Cab.	520-5333-00

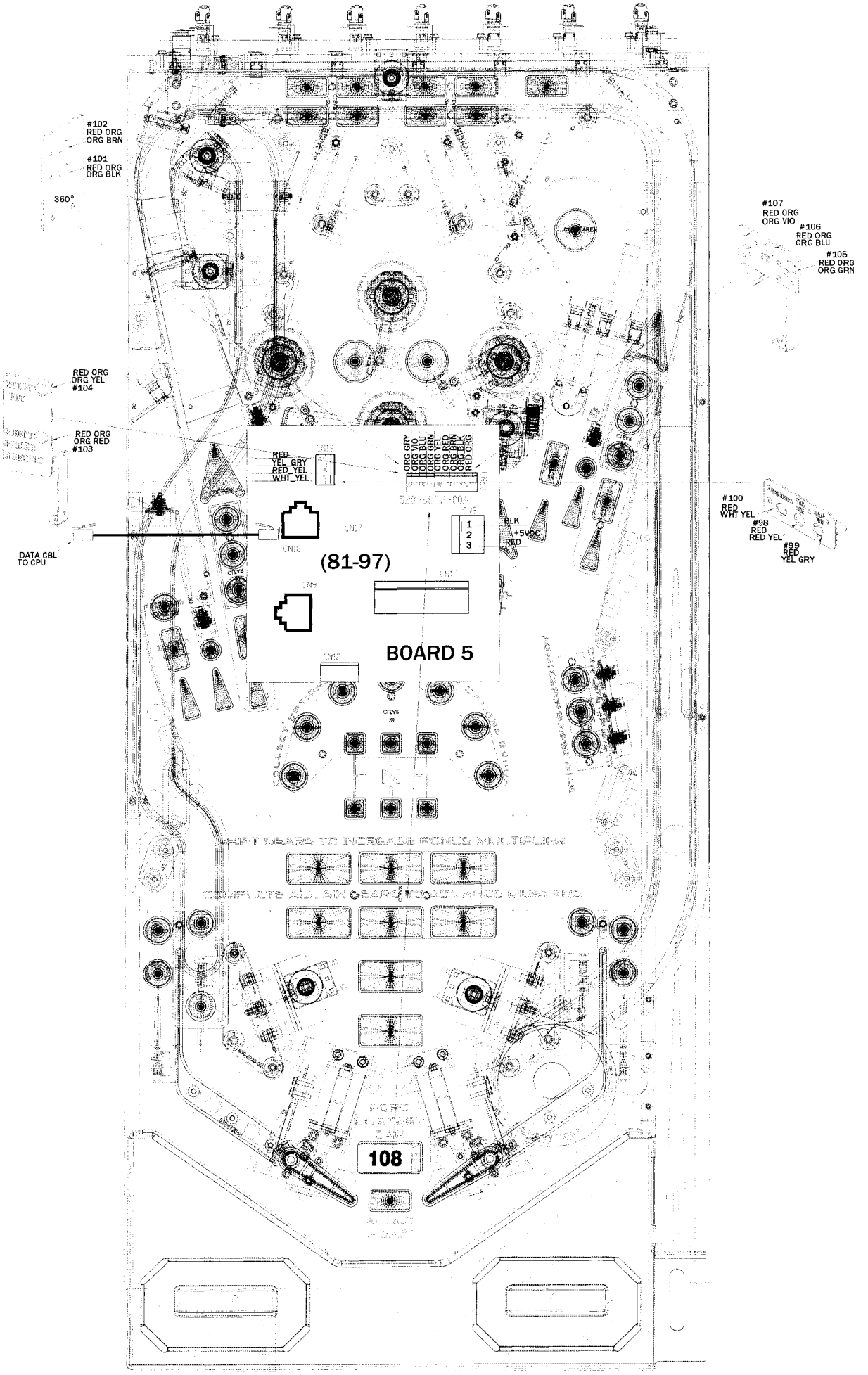
#102
RED ORG
ORG BRN
#101
RED ORG
ORG BLK
360°
RED ORG
ORG YEL
#104
RED ORG
ORG RED
#103
DATA CBL
TO CPU
RED
YEL_GRY
RED_YEL
WHT_YEL
ORG GRY
ORG VIO
ORG BLU
ORG GRN
ORG YEL
ORG RED
ORG BRN
ORG BLK
RED ORG
BLK
+5VDC
RED
(81-97)
BOARD 5
#107
RED ORG
ORG VIO
#106
RED ORG
ORG BLU
#105
RED ORG
ORG GRN
#100
RED
WHT YEL
#98
RED
RED YEL
#99
RED
YEL GRY
108

COILS DETAILED CHART TABLE

	High Current Coils Group 1	Drive Transistor	Driver Output PCB	Power Line Color	Power Line Connection	Power Voltage	Drive Transistor Control Line Color	D.T. Control Line Connect	Coil GA-Turn or Bulb Type
#1	TROUGH UP-KICKER	Q1	▲ I/O Power Driver ▼	YEL-VIO	J10-P9/10	50VDC	BRN-BLK	J8-P1	28-1200 090-5044-ND
#2	AUTO LAUNCH	Q2		YEL-VIO	J10-P9/10	50VDC	BRN-RED	J8-P3	23-800 090-5001-ND
#3	MID RAMP	Q3		YEL-VIO	J10-P9/10	50VDC	BRN-ORG	J8-P4	Dual-winding 090-5083-00 ND
#4	MID RAMP HOLD POWER	Q4		YEL-VIO	J10-P9/10	50VDC	BRN-YEL	J8-P5	Dual-winding 090-5083-00 ND
#5	UPPER RAMP	Q5		YEL-VIO	J10-P9/10	50VDC	BRN-GRN	J8-P6	Dual-winding 090-5083-03 ND
#6	UPPER RAMP HOLD POWER	Q6		YEL-VIO	J10-P9/10	50VDC	BRN-BLU	J8-P7	Dual-winding 090-5083-00 ND
#7	CENTER 5- BANK DROP RESET	Q7		YEL-VIO	J10-P9/10	50VDC	BRN-VIO	J8-P8	25-1240 090-5034-ND
#8	SHAKER MOTOR (OPTIONAL)	Q8		RED-WHT	J17-P7	16VAC	BRN-GRY	J8-P9	502-5027-00
	High Current Coils Group 2	**Drive Transistor**	**Driver Output PCB**	**Power Line Color**	**Power Line Connection**	**Power Voltage**	**Drive Transistor Control Line Color**	**D.T. Control Line Connect**	**Coil GA-Turn or Bulb Type**
#9	LEFT POP BUMPER	Q9	▲ I/O Power Driver ▼	YEL-VIO	J10-P9/10	50VDC	BLU-BRN	J8-P1	28-1200 090-5044-ND
#10	RIGHT POP BUMPER	Q10		YEL-VIO	J10-P9/10	50VDC	BLU-RED	J8-P2	28-1200 090-5044-ND
#11	BOTTOM POP BUMPER	Q11		YEL-VIO	J10-P9/10	50VDC	BLU-ORG	J8-P4	28-1200 090-5044-ND
#12	TOP POP BUMPER	Q12		YEL-VIO	J10-P9/10	50VDC	BLU-YEL	J8-P5	28-1200 090-5044-ND
#13	LEFT SLINGSHOT	Q13		YEL-VIO	J10-P9/10	50VDC	BLU-GRN	J8-P6	28-1200 090-5044-ND
#14	RIGHT SLINGSHOT	Q14		YEL-VIO	J10-P9/10	50VDC	BLU-BLU	J8-P7	28-1200 090-5044-ND
#15	**LEFT FLIPPER (50V RED/YEL)**	Q15		GRY-YEL-3A Fuse-RED-YEL	J10-P6/7	50VDC	ORG-GRY	J8-P8	23-900 090-5020-30 ND
#16	**RIGHT FLIPPER (50V RED/YEL)**	Q16		BLU-YEL-3A Fuse-RED-YEL	J10-P6/7	50VDC	ORG-VIO	J8-P9	22-1080 090-5032-ND
	Low Current Coils Group 1	**Drive Transistor**	**Driver Output PCB**	**Power Line Color**	**Power Line Connection**	**Power Voltage**	**Drive Transistor Control Line Color**	**D.T. Control Line Connect**	**Coil GA-Turn or Bulb Type**
#17	FLASH: LEFT ORBIT ARROW	Q17	▲ I/O Power Driver ▼	ORG	J6-P10	20VDC	VIO-BRN	J7-P2	LED 113-5034-08
#18	FLASH: RIGHT ORBIT ARROW	Q18		ORG	J6-P10	20VDC	VIO-RED	J7-P3	LED 113-5034-08
#19	FLASH: SLINGSHOT (LEFT)	Q19		ORG	J6-P10	20VDC	VIO-ORG	J7-P4	LED 113-5033-08
#20	FLASH: SLINGSHOT (RIGHT)	Q20		ORG	J6-P10	20VDC	VIO-YEL	J7-P6	LED 113-5033-08
#21	FLASH: BACK PANEL (LEFT)	Q21		ORG	J6-P10	20VDC	VIO-GRN	J7-P7	LED 113-5034-08
#22	TURN TABLE/CAR MOTOR	Q22		BRN	J7-P1	20VDC	VIO-BLU	J7-P8	MOTOR 041-5111-00
#23	FLASH: BACK PANEL (RIGHT)	Q23		ORG	J6-P10	20VDC	VIO-BLK	J7-P9	LED 113-5034-08
#24	OPTIONAL (e.g. COIN METER)	Q24		RED	J16-P4-8	5VDC	VIO-GRY	J7-P10	COIN METER

	Low Current Coils Group 2	Drive Transistor	Driver Output PCB	Power Line Color	Power Line Connection	Power Voltage	Drive Transistor Control Line Color	D.T. Control Line Connect	Coil GA-Turn or Bulb Type
#25	FLASH: POP BUMPERS (RIGHT)	Q25	▲ I/O Power Driver ▼	ORG	J6-P10	20VDC	BLK-BRN	J6-P1	LED 113-5034-08
#26	FLASH: POP BUMPERS (LEFT)	Q26		ORG	J6-P10	20VDC	BLK-RED	J6-P2	LED 113-5034-08
#27	FLASH: (RIGHT) SCOOP ARROW	Q27		ORG	J6-P10	20VDC	BLK-ORG	J6-P3	LED 113-5034-08
#28	FLASH: 180	Q28		ORG	J6-P10	20VDC	BLK-YEL	J6-P4	LED 113-5034-08
#29	FLASH: SKILLSHOT	Q29		ORG	J6-P10	20VDC	BLK-GRN	J6-P5	LED 113-5034-08
#30	FLASH: TURNTABLE	Q30		ORG	J6-P10	20VDC	BLK-BLU	J6-P6	LED 112-5041-08
#31	FLASH: SPEAKER PANEL (RIGHT)	Q31		ORG	J-P10	20VDC	BLK-VIO	J6-P7	LED 113-5034-05
#32	FLASH: SPEAKER PANEL (LEFT)	Q32		ORG	J6-P10	20VDC	BLK-GRY	J6-P8	LED 113-5034-05

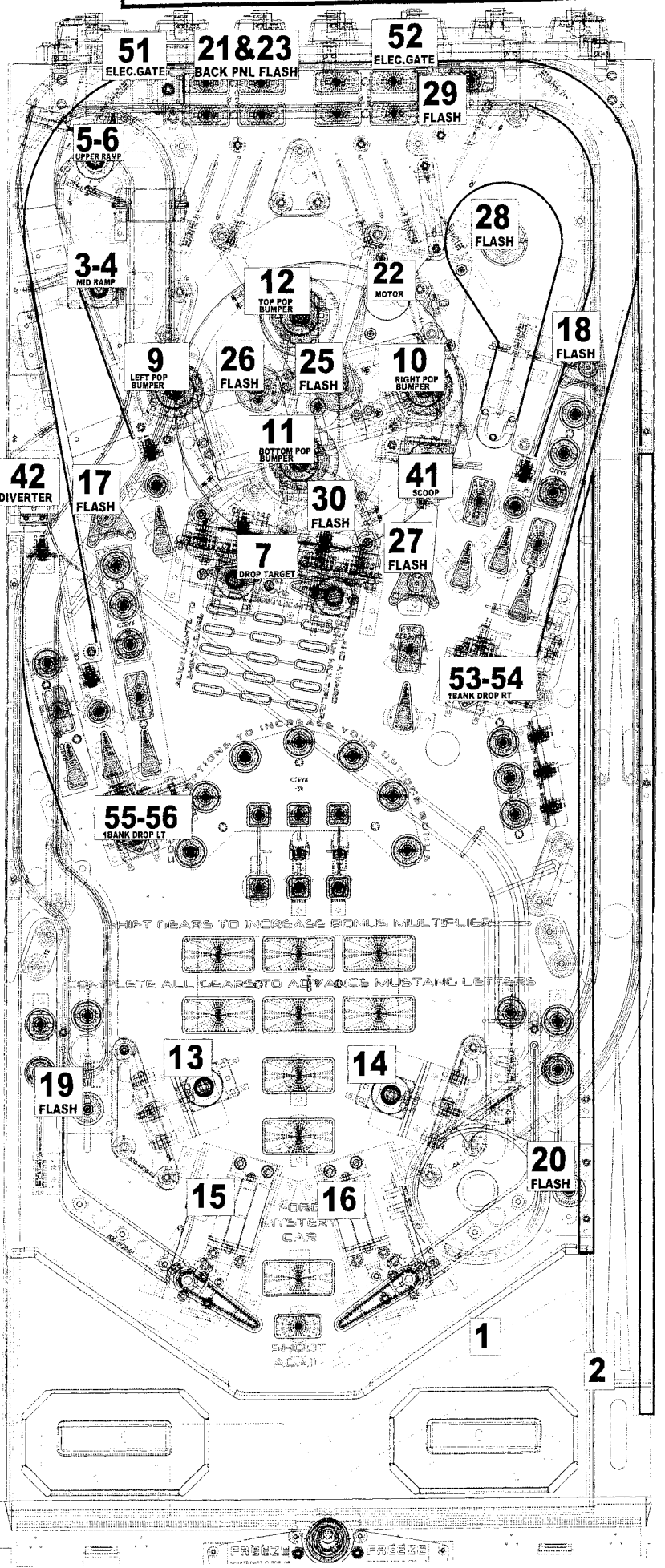

L.E BACK BOX

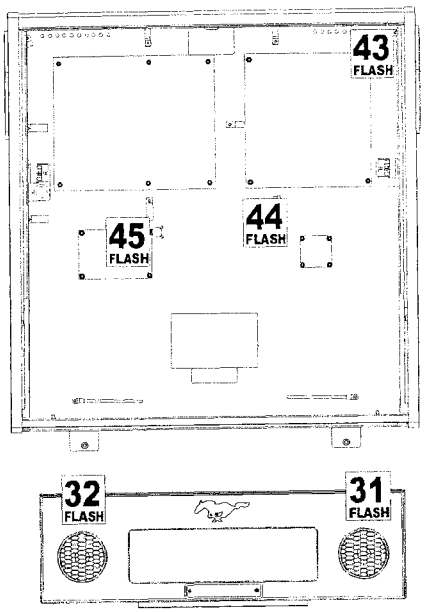

Typical Coil Wiring & Schematic

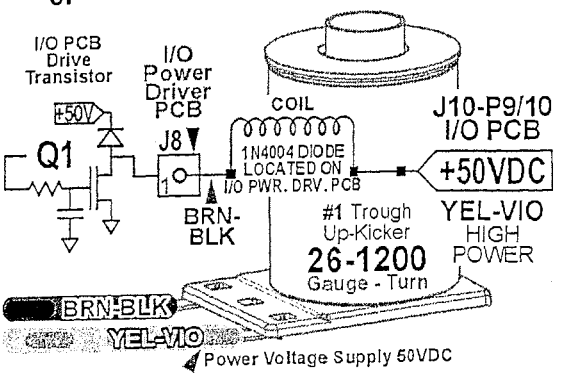

MUSTANG
TYPICAL DUAL WINDING COIL 090-5083-00-ND WIRING

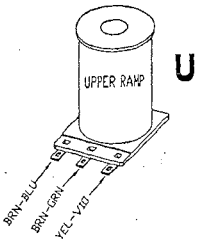

UPPER RAMP

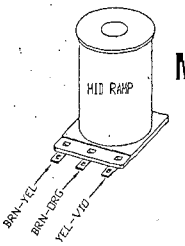

MID RAMP

12- TRANSISTOR DRIVER BOARD COIL/FLASHER CHART

Driver N.O	Assembly Name	Drive Transistor	PWR line color	PWR voltage	Control line color	Coil Type
#41	RIGHT SCOOP	Q41	YEL-VIO	50VDC	ORG-BRN	27-1500 (090-5004-ND)
#42	DIVERTER	Q42	YEL-VIO	50VDC	ORG-RED	32-1250 (090-5060-01-FC)
#43	FLASH: BACKBOX (1)	Q43	ORG	20VDC	ORG-BLK	LED (113-5034-08)
#44	FLASH: BACKBOX (2)	Q44	ORG	20VDC	ORG-YEL	LED (113-5034-08)
#45	FLASH: BACKBOX (3)	Q45	ORG	20VDC	ORG-GRN	LED (113-5034-08)
#46						
#51	Orbit control gate (LEFT)	Q51	YEL-VIO	50VDC	YEL-BRN	32-1250 (090-5060-01-FC)
#52	Orbit control gate (RIGHT)	Q52	YEL-VIO	50VDC	YEL-GRY	32-1250 (090-5060-01-FC)
#53	RT. 1- BANK DROP TRGT UP	Q53	YEL-VIO	50VDC	YEL-ORG	25-1240 (090-5034-ND)
#54	RT. 1- BANK DROP TRGT DN	Q54	YEL-VIO	50VDC	YEL-BLK	32-1800 (090-5031-00-ND)
#55	LT. 1- BAND DROP TRGT UP	Q55	YEL-VIO	50VDC	YEL-GRN	25-1240 (090-5034-ND)
#56	LT. 1- BAND DROP TRGT DN	Q56	YEL-VIO	50VDC	YEL-BLU	32-1800 (090-5031-00-ND)

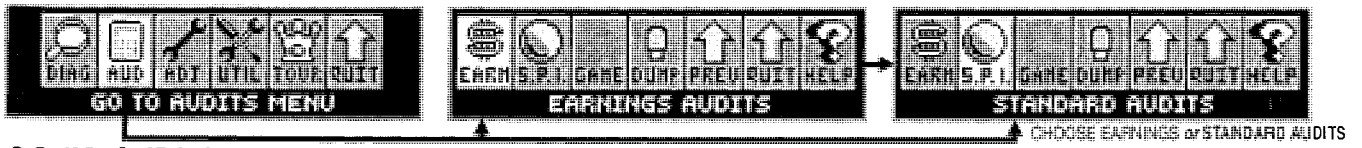

GO TO AUDITS MENU: EARNINGS AUDITS [#1 – #13] / STANDARD AUDITS [#1 – #59]

Perform the below steps to review the audits. Enter the **SERVICE MENU**, then enter the **EARNINGS AUDITS** *or* **STANDARD AUDITS MENUS**. *For audit definitions or summary, review the Audits Section (**GO TO AUDITS MENU**). Try the "**DUMP AUDITS TO USB**" Feature to create a text file of your audits. Don't forget to set the DATE & TIME in the **UTILITIES MENU**. See the Utilities Section (**GO TO UTILITIES MENU**).*

Step 1 Press [**SELECT**].
Press [BACK] to exit for escape at any time.

Step 2 Press [>]. Go to the "AUD" *Icon.*
Press [**SELECT**].

Step 3 Press [>]. Go to the "EARN" *or* "S.P.I." *Icon.*
Press [**SELECT**].

Step 4 Press [<] [>] to move between audits.

EARNINGS AUDITS [#1 – #13] ▼

Nr.	EARNINGS AUDIT NAME	YOUR RESULT
1	TOTAL PAID CREDITS	
2	FREE GAME PERCENTAGE	
3	AVERAGE BALL TIME	
4	AVERAGE GAME TIME	
5	COINS THROUGH LEFT SLOT	
6	COINS THROUGH RIGHT SLOT	
7	COINS THROUGH CENTER SLOT	

Nr.	EARNINGS AUDIT NAME	YOUR RESULT
8	COINS THROUGH FOURTH SLOT	
9	COINS THROUGH FIFTH SLOT	
10	TOTAL COINS	
11	TOTAL EARNINGS	
12	METER CLICKS	
13	SOFTWARE METER	

STANDARD AUDITS [#1 – #59] ▼

Nr.	STANDARD AUDIT NAME	YOUR RESULT
1	TOTAL BALLS PLAYED	
2	TOTAL EXTRA BALLS	
3	EXTRA BALL PERCENTAGE	
4	REPLAY 1 AWARDS	
5	REPLAY 2 AWARDS	
6	REPLAY 3 AWARDS	
7	REPLAY 4 AWARDS	
8	TOTAL REPLAYS	
9	REPLAY PERCENTAGE	
10	TOTAL SPECIALS	
11	SPECIAL PERCENTAGE	
12	TOTAL MATCHES	
13	HIGH SCORE AWARDS	
14	HIGH SCORE PERCENT	
15	TOTAL FREE PLAYS	
16	TOTAL PLAYS	
17	0.0M – 1.99M SCORES	
18	2.0M – 3.99M SCORES	
19	4.0M – 5.99M SCORES	
20	6.0M – 7.99M SCORES	

Nr.	STANDARD AUDIT NAME	YOUR RESULT
21	8.0M – 9.99M SCORES	
22	10.0M – 12.49M SCORES	
23	12.5M – 14.99M SCORES	
24	15.0M – 17.49M SCORES	
25	17.5M – 19.99M SCORES	
26	20.0M – 24.99M SCORES	
27	25.0M – 29.99M SCORES	
28	30.0M – 39.99M SCORES	
29	40.0M – 49.99M SCORES	
30	50.0M – 74.99M SCORES	
31	75.0M – 99.99M SCORES	
32	100.0M – 149.99M SCORES	
33	150.0M+ SCORES	
34	AVERAGE SCORES	
35	SERVICE CREDITS	
36	BALL SEARCH STARTED	
37	LOST BALL FEEDS	
38	LOST BALL GAME STARTS	
39	LEFT DRAINS	
40	CENTER DRAINS	

Nr.	STANDARD AUDIT NAME	YOUR RESULT
41	RIGHT DRAINS	
42	TILTS	
43	TOTAL BALLS SAVED	
44	LEFT FLIPPER USED	
45	RIGHT FLIPPER USED	
46	0 – 1 MINUTE GAMES	
47	1 – 1.5 MINUTE GAMES	
48	1.5 – 2 MINUTE GAMES	
49	2 – 2.5 MINUTE GAMES	
50	2.5 – 3 MINUTE GAMES	
51	3 – 3.5 MINUTE GAMES	
52	3.5 – 4 MINUTE GAMES	
53	4 – 5 MINUTE GAMES	
54	5 – 6 MINUTE GAMES	
55	6 – 8 MINUTE GAMES	
56	8 – 10 MINUTE GAMES	
57	10 – 15 MINUTE GAMES	
58	15+ MINUTE GAMES	
59	RECENT REPLAY PERCENT	

Note: *Audits are subject to change (with or without notice).*

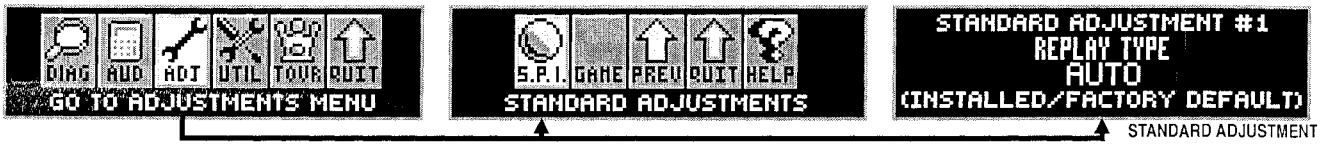

GO TO ADJUSTMENTS MENU: STANDARD ADJUSTMENTS [#1 – #63]

Peform the below steps to review the adjustments. Enter the **ADJUSTMENTS MENU**, then enter the **STANDARD ADJUSTMENTS MENU**. *For adjustment definitions or summary, review the Adjustments Section (**GO TO ADJUSTMENTS MENU**). See Utilities Section (**GO TO INSTALLS MENU**), to easily change all adjustments required depending on the Install Type (Easy, Hard, 5-Ball, Home Play, etc.) desired.*

Step 1 Press [**SELECT**]. Press [BACK] to exit *or* escape at any time.

Step 2 Press [>]. Go to the "ADJ" *Icon.* Press [**SELECT**].

Step 3 ... "S.P.I." *Icon.* Press [**SELECT**].

Step 4 **STANDARD ADJUSTMENT #1** appears with the Adjustment Name [**REPLAY TYPE**] flashing. With the Adjustment Name flashing, press [<] [>] to move between adjustments.

Step 5 To change the Adjustment Setting, press [**SELECT**]. With the Adjustment Setting flashing, press [<] [>] repeatedly until the desired setting appears. Press the [**SELECT**] to "install" the change. The Adjustment Comment *(bottom text line)* will indicate [**INSTALLED/FACTORY DEFAULT**], if the Factory Default Setting is selected *or* [**INSTALLED**] if the change is not the Factory Default Setting.

STANDARD ADJUSTMENTS [#1 – #63] ▼

Nr.	STANDARD ADJUSTMENT NAME	USA DEFAULT	YOUR SETTING
1	REPLAY TYPE	AUTO	
2	‡ REPLAY PERCENTAGE	10%	
3	‡ REPLAY AWARD	CREDIT	
4	‡ REPLAY LEVELS	1	
5	‡ AUTO REPLAY START	___,000,000	
6	‡ DYNAMIC REPLAY START	60,000,000	
7	‡ REPLAY LEVEL #1	15,000,000	
8	‡ REPLAY LEVEL #2	30,000,000	
9	‡ REPLAY LEVEL #3	45,000,000	
10	‡ REPLAY LEVEL #4	60,000,000	
11	‡ REPLAY BOOST	YES	
12	SPECIAL LIMIT	1	
13	‡ SPECIAL PERCENTAGE	10%	
14	SPECIAL AWARD	CREDIT	
15	FREE GAME LIMIT	5	
16	EXTRA BALL LIMIT	5	
17	‡ EXTRA BALL PERCENTAGE	25%	
18	GAME PRICING	USA 10	
19	MATCH PERCENTAGE	9%	
20	MATCH AWARD	CREDIT	
21	BALLS PER GAME	3	
22	TILT WARNINGS	2	
23	CREDIT LIMIT	30	
24	ALLOW HIGH SCORES	YES	
25	HIGH SCORE AWARD	CREDIT	
26	GRAND CHAMPION AWARDS	1	
27	HIGH SCORE #1 AWARDS	1	
28	HIGH SCORE #2 AWARDS	0	
29	HIGH SCORE #3 AWARDS	0	
30	HIGH SCORE #4 AWARDS	0	
31	GRAND CHAMPION SCORE	___,000,000	

Nr.	STANDARD ADJUSTMENT NAME	USA DEFAULT	YOUR SETTING
32	HIGH SCORE #1	___,000,000	
33	HIGH SCORE #2	___,000,000	
34	HIGH SCORE #3	___,000,000	
35	HIGH SCORE #4	___,000,000	
36	HSTD INITIALS	3 INITIALS	
37	HSTD RESET COUNT	2000	
38	FREE PLAY	NO	
39	LANGUAGE	ENGLISH	
40	PLAYER LANGUAGE SELECT	YES	
41	CUSTOM MESSAGE	ON	
42	FLASH LAMP POWER	NORMAL	
43	COIL PULSE POWER	NORMAL	
44	KNOCKER VOLUME	NORMAL	
45	GAME RESTART	YES	
46	BILL VALIDATOR	NO	
47	MUSIC VOLUME	1	
48	BALL SAVE TIME	0:05	
49	TIMED PLUNGER	OFF	
50	FLIPPER BALL LAUNCH	OFF	
51	COINDOOR BALL SAVER	NO	
52	COMPETITION MODE	NO	
53	CONSOLATION BALL	YES	
54	FAST BOOT	YES	
55	Q24 OPTION	COIN METER	
56	TICKET DISPENSER	NO	
57	PLAYER COMPETITION	YES	
58	TEAM SCORES	NO	
59	LOCATION ID	0	
60	GAME ID	0	
61	TIME FORMAT	12-HOUR	
62	COIN INPUT DELAY	30	
63	LOST BALL RECOVERY	YES	

Factory Defaults Settings are subject to change during production (especially Standard Adjustments 2, 4, 5, 13, 16-17, 19, 31-35 & 47).
‡ Not all Standard Adjustments are shown. Depending on the setting (whether Factory Default or if changed by the operator), associated adjustments do not appear, if not required. ***Note:*** *If **Game Dip Switch** other than USA is installed, different Defaults will appear.*

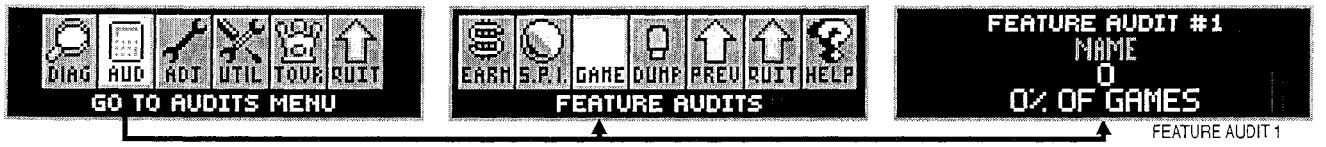

GO TO AUDITS MENU: FEATURE AUDITS [#1 – #+]

Perform the below steps to review the audits. Enter the **AUDITS MENU**, then enter the **FEATURE AUDITS MENU**. *Try the "**DUMP AUDITS TO USB**" Feature to create a text file of your audits. *Don't forget to set the DATE & TIME in the **UTILITIES MENU**. See Utilities Section (**GO TO UTILITIES MENU**), for more information.*

Step 1 Press [**SELECT**]. Press [BACK] to exit *or* escape at any time.

Step 2 Press [>]. Go to the "AUD" *Icon.* Press [**SELECT**].

Step 3 Press [>]. Go to the "GAME" *Icon.* Press [**SELECT**].

Step 4 Press [<] [>] to move between audits.

% = AUDIT RESULT DIVIDED BY STANDARD AUDIT 16 (TOTAL PLAYS).

Feature Audits are subject to change *(with or without notice).* **View Feature Audits on the Dot Display only.** To export all audits to your memory stick *(creating a text file)*, perform the following. Enter the **AUDITS MENU**, then enter the **DUMP AUDITS TO USB**. ***Note:*** *The "DUMP" Icon can also be accessed in the **USB MENU** via the **UTILITIES MENU** (see the Utilities Section (**GO TO USB MENU**) for details).*

Step 1 Insert your **USB Compatible Memory Stick** into the USB port on the CPU/Sound Board (S.A.M. System). If the Memory Stick has space available and is free of errors, a dated file* is generated *(* ensure your Date & Time is set prior to selecting or the dated file will have the default date of 20XX_01_01; see Section **3**, Chapter **5**, SET DATE / TIME via the **UTILITIES MENU** for details).*

Step 2 Press [**SELECT**] to save the file to your Memory Stick. Press [**SELECT**] again to continue *or* [BACK] to exit *or* escape at any time.

Step 3 Remove the Memory Stick and insert into your PC *or* Mac to save the file *(which can then be copied, printed or emailed).* The audits are numbered sequentially ***without*** a number restart between the three types of audits *(Earnings, Standard and Feature).*

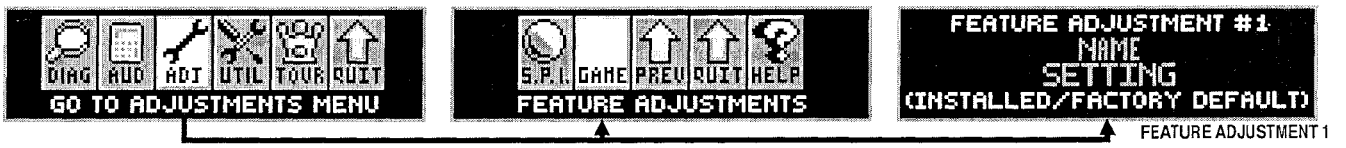

GO TO ADJUSTMENTS MENU: FEATURE ADJUSTMENTS [#1 – #+]

Peform the below steps to review the adjustments. Enter the **SERVICE MENU**, then enter the **FEATURE ADJUSTMENTS MENU**. *For adjustment definitions or summary, review the Adjustments Section (**GO TO ADJUSTMENTS MENU**). See Utilities Section (**GO TO INSTALLS MENU**), to easily change all adjustments required depending on the Install Type (Easy, Hard, 5-Ball, Home Play, etc.) desired.*

Step 1 Press [**SELECT**]. Press [BACK] to exit or escape at any time.

Step 2 Press [>]. Go to the "ADJ" *Icon.* Press [**SELECT**].

Step 3 Press [>]. Go to the "GAME" *Icon.* Press [**SELECT**].

Step 4 **FEATURE ADJUSTMENT #1** appears with the Adjustment Name [**FEATURE ADJ. NAME**] flashing. With the Adjustment Name flashing, press [<] [>] to move between adjustments.

Step 5 To change the Adjustment Setting, press [**SELECT**]. With the Adjustment Setting flashing, press [<] [>] repeatedly until the desired setting appears. Press the [**SELECT**] to "install" the change. The Adjustment Comment *(bottom text line)* will indicate [**INSTALLED/FACTORY DEFAULT**], if the Factory Default Setting is selected *or* [**INSTALLED**] if the change is not the Factory Default Setting.

Feature Adjustments are subject to change *(with or without notice).* **View Feature Adjustments on the Dot Display only.** Use the Installs Menu *(via the **UTILITIES MENU**)* to automatically change a select group of Feature Adjustments *(see the Utilities Section) or* adjust them one-by-one.

POWER REQUIREMENTS

This game ***must be connected to a properly grounded outlet to reduce shock hazard*** *and* insure proper game operation. *See the Yellow Pages (Schematics & Wiring), for transformer connections required for* ***Normal, High****, and* ***Low Line*** *conditions.*

Normal Line:	**110v AC - 125v AC @ 60Hz**	
Domestic use an 8AMP 250v Slo-Blo Fuse.	**AVG OPERATION** CURRENT: **2.8AMP** WATTAGE: **329w**	**MAX OPERATION** CURRENT: **8AMP** WATTAGE: **940w**
High Line:	**218v AC - 240v AC @ 50Hz**	
Export use 2x 5AMP 250v Slo-Blo Fuses. (*England & Hong Kong use an 8AMP 250v S/B Fuse.)	**AVG OPERATION** CURRENT: **1.8AMP** WATTAGE: **412w**	**MAX OPERATION** CURRENT: **5AMP** | **8AMP*** (England & Hong Kong use an 8A Fuse) WATTAGE: **1145w** | **1832w***
Low Line:	**95v AC - 108v AC @ 50Hz / 60Hz**	
Export Japan Only use an 8AMP 250v Slo-Blo Fuse.	**AVG OPERATION** CURRENT: **2.6AMP** WATTAGE: **264w**	**MAX OPERATION** CURRENT: **8AMP** WATTAGE: **812w**

GAME DIMENSIONS

The overall **Front / Back Height** dimensions include the **added** 1" with the ***Leg Levelers*** *turned all the way* ***in****.*

* ***PLEASE NOTE:*** *The TOURNMENT PLAY Sign or* ***betaBRITE Color Dot Display*** *will add up to 4⅜" **to the overall Back Height for a total of 79⅝".***

Ceiling Height Requirement:
↻ *An additional* ***1 ½"*** *is required for the rotation (↻) of the Backbox to the upright position.*
The complete Back Height required with Sign *or* **Dot Display and rotation:** 81"

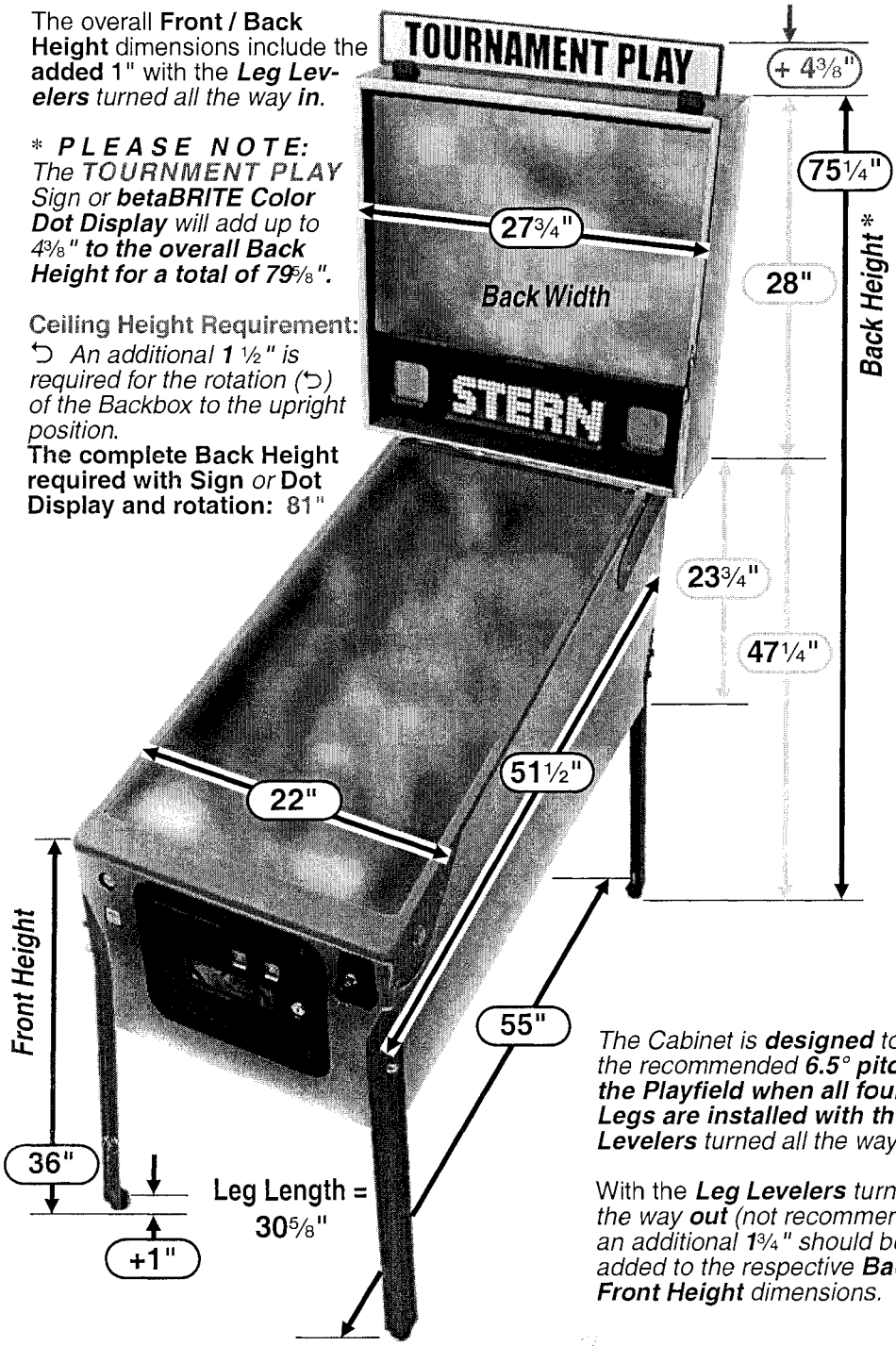

The Cabinet is ***designed*** *to give the recommended* ***6.5° pitch to the Playfield when all four (4) Legs are installed with the Leg Levelers*** *turned all the way* ***in****.*

With the ***Leg Levelers*** *turned all the way* ***out*** *(not recommended), an additional* ***1¾"*** *should be added to the respective* ***Back*** *or* ***Front Height*** *dimensions.*

TRANSPORTATION

BEFORE TRANSPORTING

To reduce the possibility of damage, observe **ALL** precautions whenever transporting the game.

Read & follow *the next page on* ***How to Secure the Backbox for Transporting****. Remove the legs and secure the game within the transporting vehicle.*

SAVE AND RETAIN ALL PRINTED INFORMATION INSIDE THE CABINET !

Shipping Box Dimensions

Height 56" Width 31"
Depth 31"
Approx. Unboxed Weight: 260lbs. (+/- 10)
Boxed Weight:
Wt. 290lbs. (+/- 15)

CAUTION

At least 2 people are required to move and maneuver this game. Use proper moving equipment & extreme care while handling!

How to Secure the Backbox for Transporting

*For more Backbox details & part numbers, see the Pink Pages (**Parts Identification & Location, Backbox ...**).*

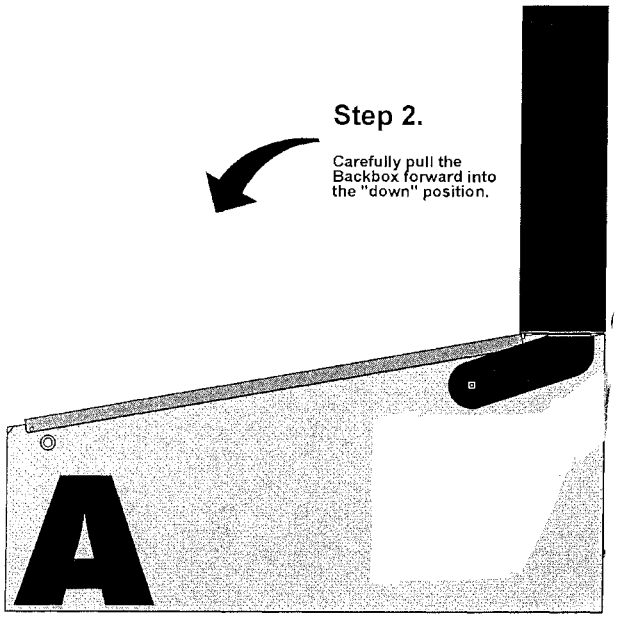

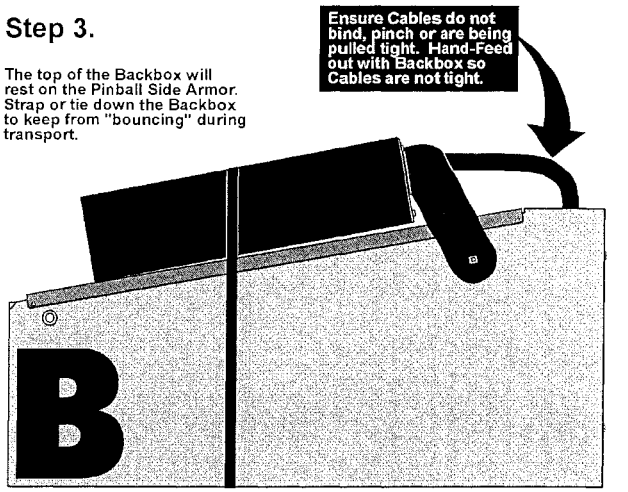

Leg Leveler Adjustment

Attach the four (4) Leg Assemblies to cabinet corners with the eight (8) leg bolts provided .

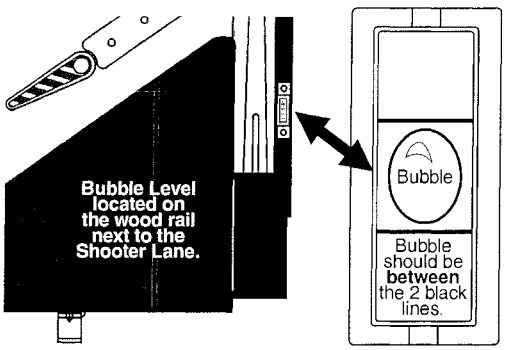

Start adjustment with the leg levelers *turned all the way in.*

View the *bubble* in the level provided on the right side wood rail.

Adjust the front or rear levelers as necessary to cause the bubble to float between the two (2) black lines.

Use a pinball to roll down the center of the playfield for side-to-side leveling.

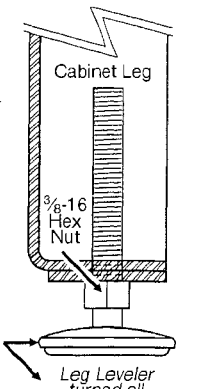

YOUR PLAYFIELD PITCH IS NOW AT 6.5° AS REQUIRED FOR PROPER GAME PLAY!

Note:** For custom adjustment greater than >6.5° can be achieved by turning out the rear leg leveler(s), however, **it is not recommended.

Easy Access Service System - 2 Positions

With the front molding & glass removed, carefully lift the playfield *(take care when using the Bottom Arch to hoist).*

Position 1

When lifted high enough, the ***Playfield Support Slide Brackets*** (**Fig. 1A**) can be seen and can clear the cabinet front (**Fig. 1B**). At this time, pull the playfield toward the front of the cabinet, checking that the mechanical components clear the cabinet front, then rest the playfield on the ***Playfield Support Slide Brackets*** at the front channel of cabinet (**Fig. 1C**);

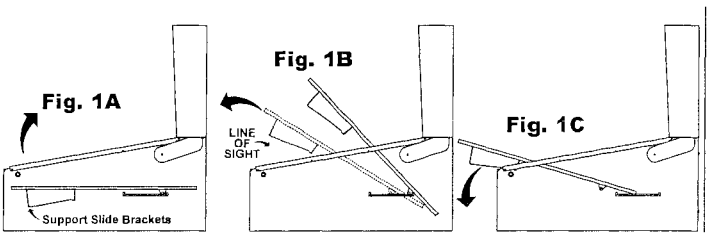

Position 2

With the playfield at rest, hold the sides & pull toward the front of the cabinet *(approx. 6" to 8")*, until resistance is felt from ***Edge Slide Brackets*** stopping against the ***Slide & Pivot Support Brackets*** located on either side of the cabinet (**Fig. 2A**). At this time, swivel the playfield toward the Backbox, then rest on the top edge (**Fig. 2B & 2C**).

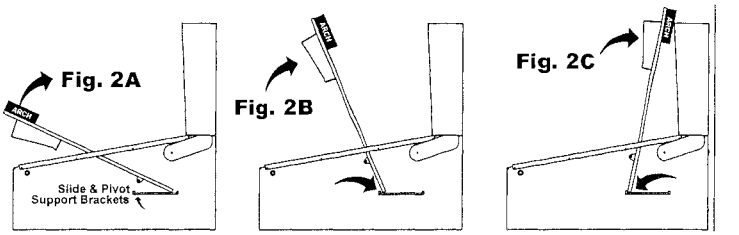

Service Menu Introduction

Important: *The* ***Switch Bracket*** *holds the* ***Playfield Power Interlock****. It is located just inside the Coin Door frame (see pictorial of the* ***Coin Door*** *on the previous page). The Button Switch for the* ***Playfield Power Interlock Switch*** *must be pulled out for electro-mechanical device testing or diagnostic purposes (this is required). If this button is pushed in, the* ***Playfield Power*** *is disabled while the* ***Coin Door*** *is* ***OPEN****.*

To get into the **SERVICE MENU MODE** review "**Function 3: SERVICE MENU**" on the next page. After Power-Up, push down the **Black [SELECT] Button** to begin. Looking at the display you will momentarily see "**SERVICE MENU**" followed by the **MAIN MENU**:

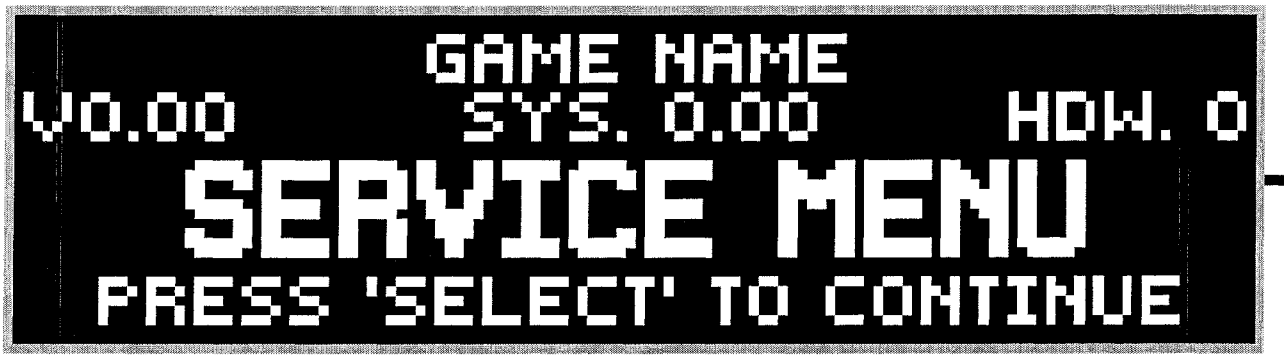

Use the **Red [< / –] / [+ / >] Buttons** to move the selected ***Icon*** left or right, and the **Black [SELECT] Button** fto activate the selected ***Icon***.

The **MAIN MENU** now appears with the "DIAG" *Icon* (**GO TO DIAGNOSTICS MENU**) highlighted:

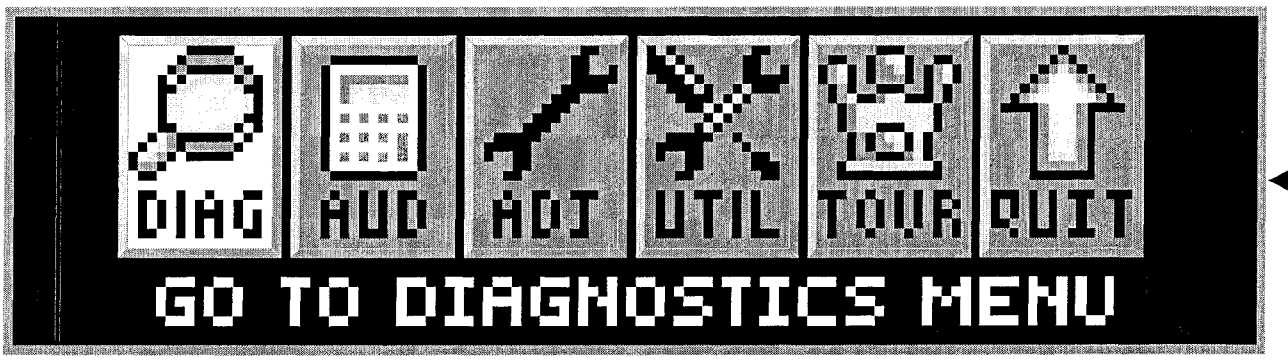

As the operator views the Menu Screen(s), the MORE MORE symbols indicates that there are more *Icons* to select in each direction. The *Icon* selected will blink. Pushing the **Black [SELECT] Button** will select the *Icon* and the Menu Screen will change to the menu selected. Select the **Green [BACK] Button** to move backwards through the menu levels. Press the **Green [BACK] Button** repeatedly or select the "**QUIT**" *Icon* to completely exit the **SERVICE MENU** Mode.

View the **SERVICE MENU Icon Tree** on the next pages for a complete overview of all menus used in this system. The "HELP" *Icon* provides an explanation of **ICON** usage *or* any other information in the Menu where the "HELP" *Icon* was selected *(when available).*

DIAG: GO TO DIAGNOSTICS MENU
AUD: GO TO AUDITS MENU
ADJ: GO TO ADJUSTMENTS MENU
UTIL: GO TO UTILITIES MENU
(INSTALLS, CUSTOM MSG., CUSTOM PRICING, SET TIME, RESET & USB)
TOUR: GO TO TOURNAMENT MENU (START TOURNAMENT, VIEW TOURNAMENT DATA, SIGN MESSAGES)

>> TO UPDATE THE GAME CODE, REVIEW THE STEPS ON THE INSIDE FRONT COVER OF THIS MANUAL.

Use both the manual and the display to help customize, troubleshoot and/or diagnose faults, if any.

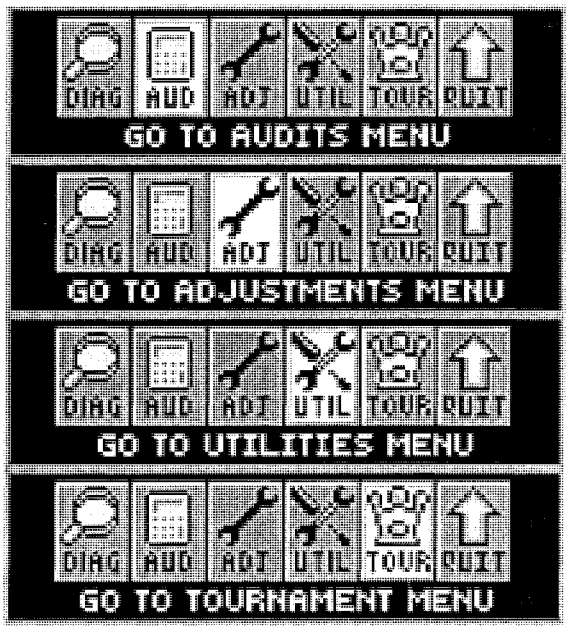

Service Switch X4 Set Access & Use

The **4-Button Service Switch Set** provides access for ***three (3) functions*** available for your use: **1: SERVICE CREDIT**, **2: VOLUME [–] / [+]** and **3: SERVICE MENU.**

▼ Service Switch X4 Set ▼

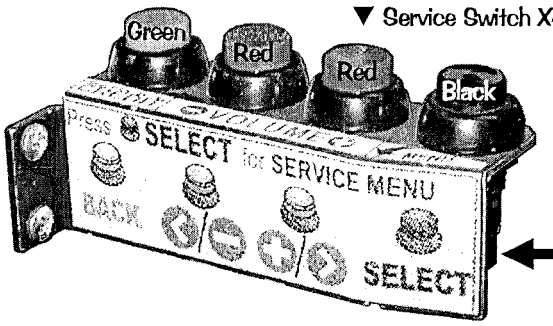

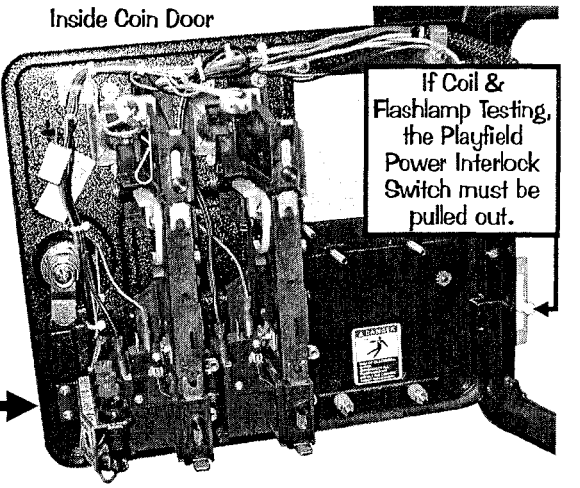

To access any of these ***three (3) functions*** you must first open the **Coin Door** *(see pictorial above)* with the Game in the ***Attract Mode*** *(not already in any Function or Menu stated below) and then follow below.*

*Pushing the GREEN **BUTTON** first.*

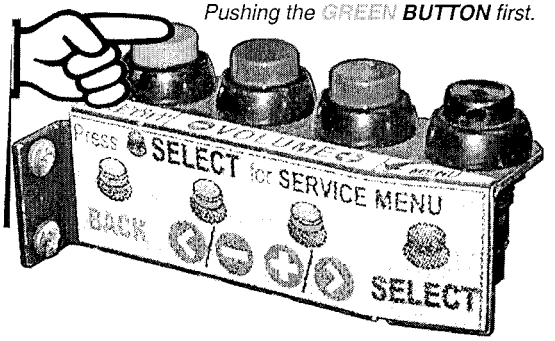

◀ Function 1: SERVICE CREDITS MENU

Pushing the **Green [SERVICE CREDIT] Button** first, adds a ***Service Credit*** per push *(will not affect your audits as "paid" credits).* This is useful for the technician to test games in regular play without affecting the game audits. Each depression adds **1 credit**; up to **50 credits** can be applied. **Standard Adjustment 23, Credit Limit**, determines this, however, it can be changed from 04-50; *for details see the Adjustments Section.*

Note: *Once your credits are added, this menu will **automatically exit** a few seconds after the last button depression or when the* **Green [BACK]** *or* **Black [SELECT] Button** *is pushed. This function is disabled if Standard Adjustment 38, **Free Play**, is set to **YES**. The Service Credits are limited to the Credit Limit in addition to any paid credits present in the game (e.g. If the Credit Limit is 30, with 8 paid credits present, only 22 Credits can be applied.).*

*Pushing either RED **BUTTON** first.*

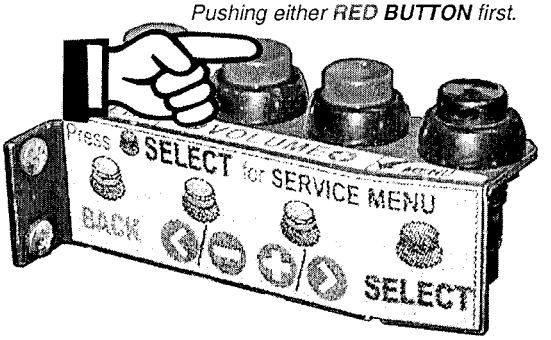

*Pushing either RED **BUTTON** first.*

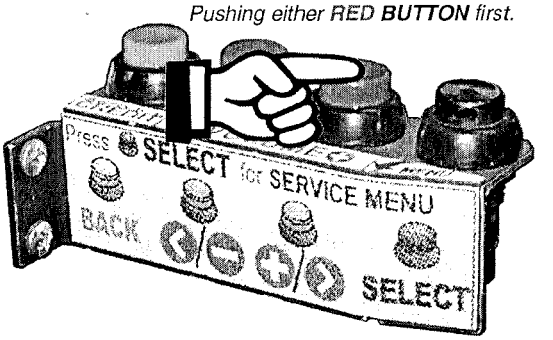

▲ Function 2: VOLUME MENU ▲

Pushing either of the **Red [VOLUME] Buttons** first, enters the ***VOLUME MENU.*** While in this Mode, to **DECREASE** the volume, hold down or depress the **1st Red [< / –] Button** until desired the volume is achieved; to **INCREASE** the volume, hold down or depress the **2nd Red [+ / >] Button** until the desired volume is achieved.

Note: *The volume can be set between* **0-63***; Once your adjustments are made, this menu will **automatically exit** a few seconds after the last button depression or when the* **Green [BACK]** *or* **Black [SELECT] Button** *is pushed.*

*Pushing the **BLACK BUTTON** first.*

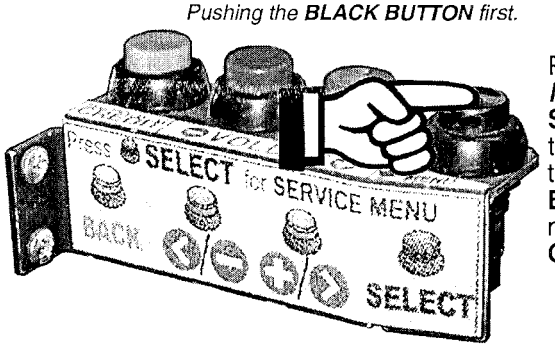

◀ Function 3: SERVICE MENU

Pushing the **Black [SELECT] Button** first, enters the ***SERVICE MENU.*** Once in, navigate through all menus by depressing the **Service Menu Buttons**. Use the **Red [< / –]** *or* **[+ / >] Buttons** to move LEFT / RIGHT, NEXT/PREVIOUS *(audits/adjustments) or* to INCREASE / DESCREASE an adjustment (setting). Use the **Black [SELECT] Button** to select a highlighed *Icon*, move to the next line of text *or* to answer "**OK**" where applicable. Use the **Green [BACK] Button** to exit *or* escape back.

Exit Service Menu

In the **MAIN MENU** and in all **SUB-MENUS** *(where the "QUIT" Icon is present)*, if the "QUIT" *Icon* is selected and *activated*, or the **Green [BACK] Button** is selected repeatedly *(depending on which sub-menu you're in...)*, the **SERVICE MENU Session** will be exited and returned to the ***Attract Mode***.

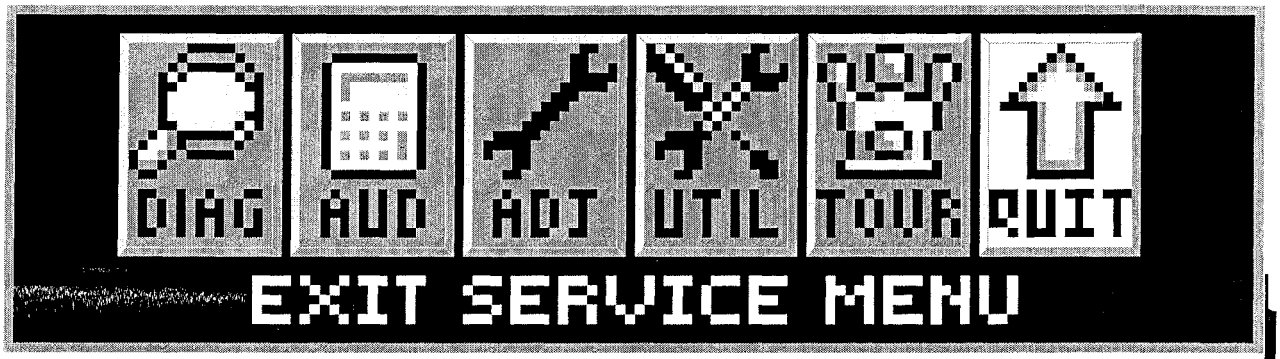

Turning the game on/off will start the *Power-Up Routine*. Upon **Power-Up**, the DISPLAY will indicate the COUNTRY, FILE VERSION and LANGUAGE(S) installed. LANGUAGE/COUNTRY: change via Dip Switch.

The below **Problem / Solution Table** was designed to answer some common problems frequently asked.

Problem / Solution Table

PROBLEM	SOLUTION
Will not enter the **SERVICE MENU** after depressing the **Black [SELECT] Button**.	• Check the Service Switches [GREEN, RED (X2) & **BLACK Buttons**] for loose connections or bad ground. • Check the associated wiring harness to/from the CPU/Sound Board, Connector **J13**. • Check CPU/Sound Board for possible failure.
All **Service Buttons** [• • • • **Buttons**] appear nonfunctional.	• Check the Service Switches wiring harness for poor or no connection and/or broken wires.
The **Green Button** in the Attract Mode will not enter the **SERVICE CREDITS MENU** to add Service Credits.	• Check to make sure the Game is not in "**Free Play.**" *If the game is set to Free Play, adding Service Credits is not required.* • Check the Service Switches wiring harness for poor or no connection and/or broken wires.
The **Display** "blanks out."	• Check the Dot Matrix Display for loose wiring harness for poor or no connection and/or broken wires. • Check **F1** (3/4A Fuse) on the Display Power Supply Board. *Refer to the Yellow Pages (**SCHEMATICS & TROUBLESHOOTING**).*
Icons *"scroll"* along continuously in the **MAIN MENU**.	• Check for a stuck switch on either of the **Red Buttons**.
The **Start** and **Flipper Buttons** do not select or activate *Icons* in the **SWITCH TEST MENU**.	• This is normal. These switches are deactivated, as they are a part of the Switch Test. *Refer to the Diagnostics Section (**GO TO DIAGNOSTICS MENU, Switch Test**).*
Can't move selection of *Icon* with the **Left** and/or **Right Flipper Buttons**.	• Check the **Flipper Buttons** for loose connections or bad Ground and refer to Section **5**, Chapter **2**, Playfield Wiring, #-Flipper Circuit Wiring Diagram. • This is normal ***only*** in ***Diagnostic's Switch & Active Switch Tests*** *(see previous Problem).*
Some *Icons* appear non-functional in the **MENU** or missing.	• Some functionality of the Service Menu may not have been completed during development. If exists, it should only be a non-critical function, such as the "HELP" *Icon*, which will explain the usage of icons. When completed, a software update will correct the problem. Software updates are announced via Service Bulletins (if critical) and on our website **http://www.sternpinball.com/GAME-code.shtml**; view the Game Code Library Message Board Marquee or click **Previous Messages** for past announcements.
In **COIL TEST MENU**, the coils and flashlamps ***do not*** fire after pressing the **Black [SELECT] Button**.	• Ensure the **POWER INTERLOCK SWITCH *is pulled out*** *(see the start of this Chapter).*
In the **SERVICE MENU**, the volume cannot be adjusted with either of the **Red Buttons**.	• The Volume adjustment can only be made when in the **Attract Mode** *(see the start of this Chapter).*
In the **SERVICE MENU**, the display seems to lock up, or the Help Display appears to be non-functional.	• If you cannot clear the situation by exiting back one Menu, exit completely out of the **SERVICE MENU**, and re-enter. If the problem persists, call Technical Support for additional help.

IF YOU NOTE ANY OTHER PROBLEMS or HAVE ANY SYMPTOMS NOT DESCRIBED ABOVE, PLEASE CALL TECHNICAL SUPPORT 800-542-5377 (708-345-7700 OPTION #1), SO WE MAY ASSIST YOU.

Pinball Service Menu Icon Tree

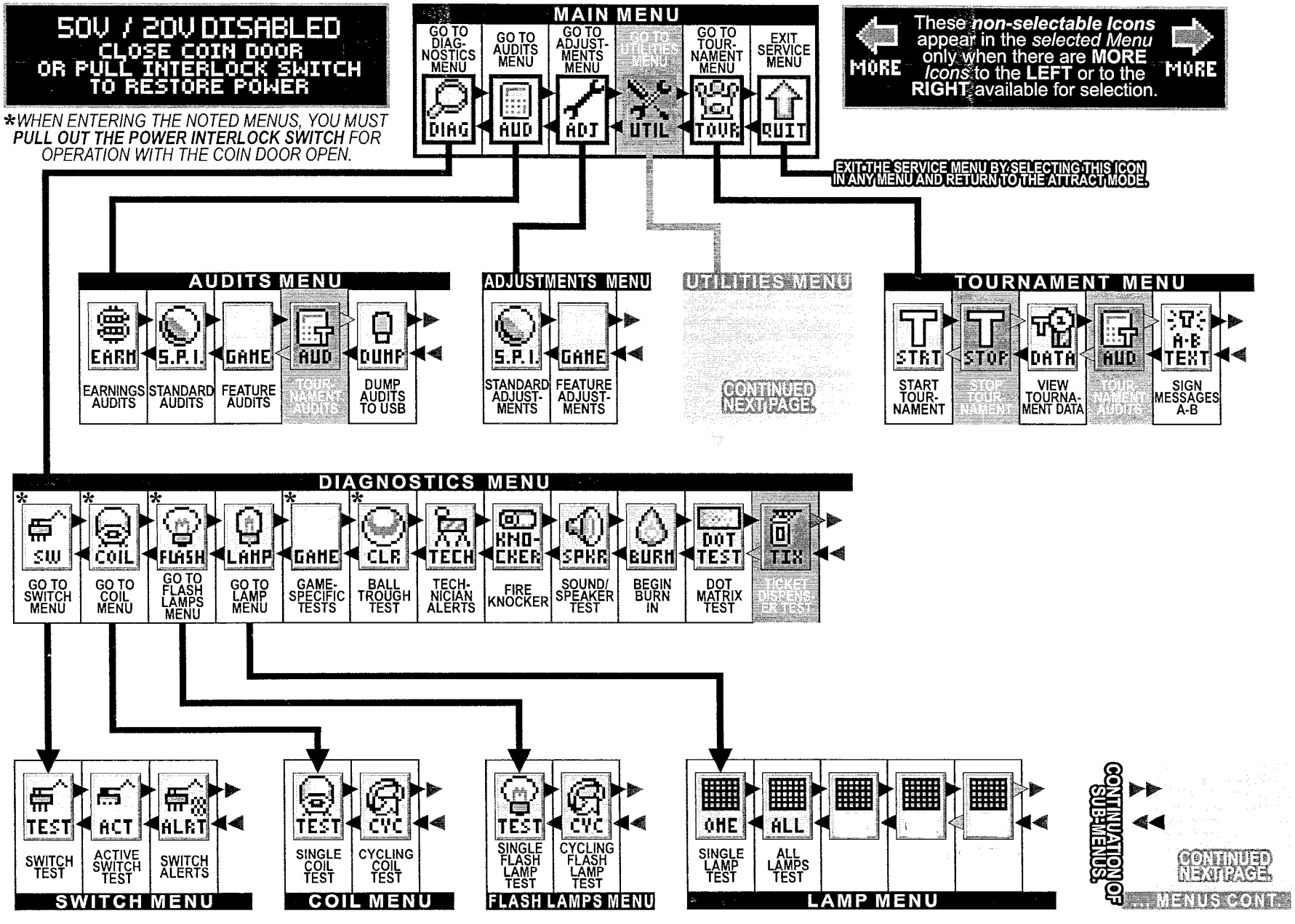

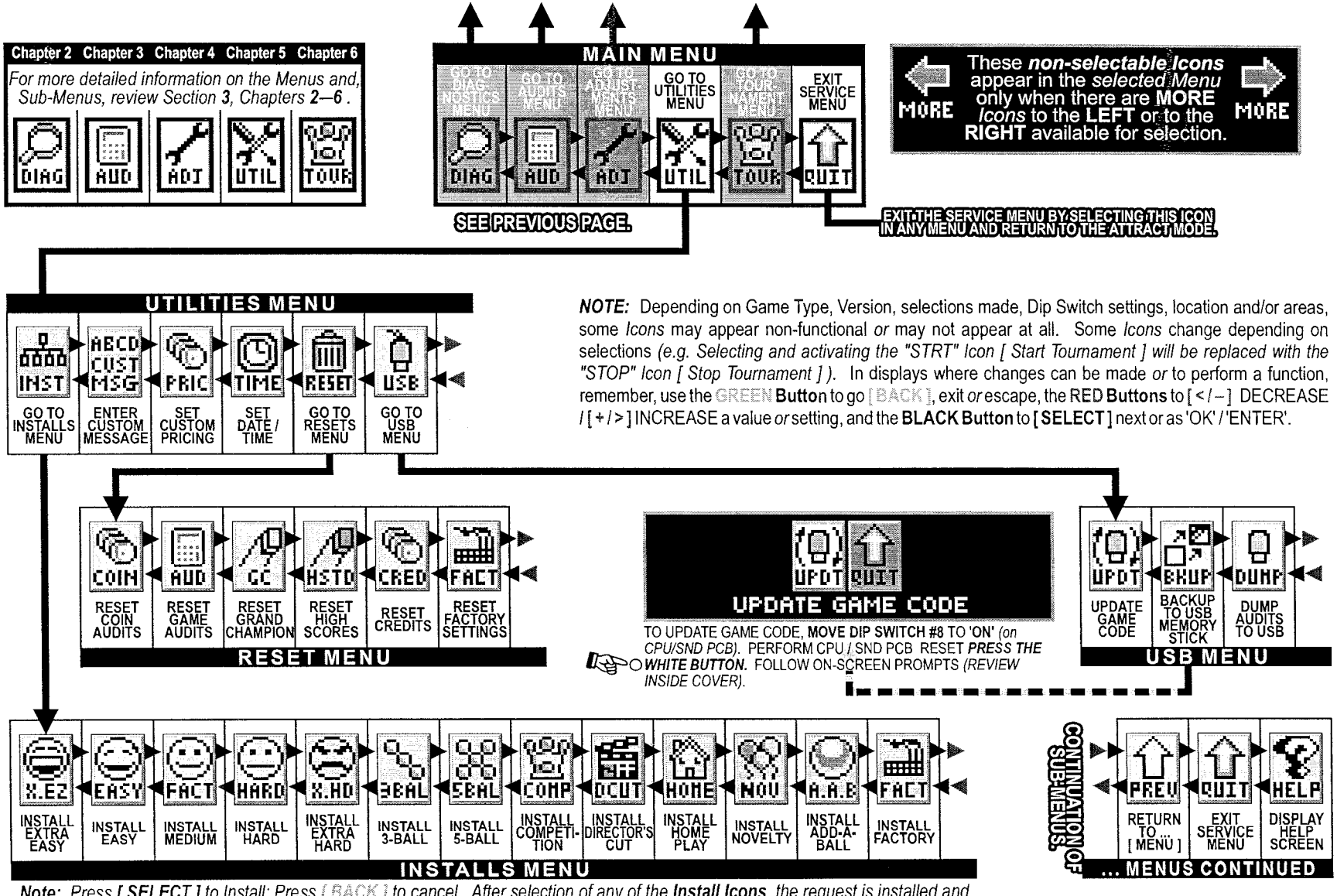

Note: *Press [SELECT] to Install; Press [BACK] to cancel. After selection of any of the* ***Install Icons****, the request is installed and returns to the* ***Install Menu****. The last icon activated before exiting this menu will supercede any previous Icon selected in the group.*

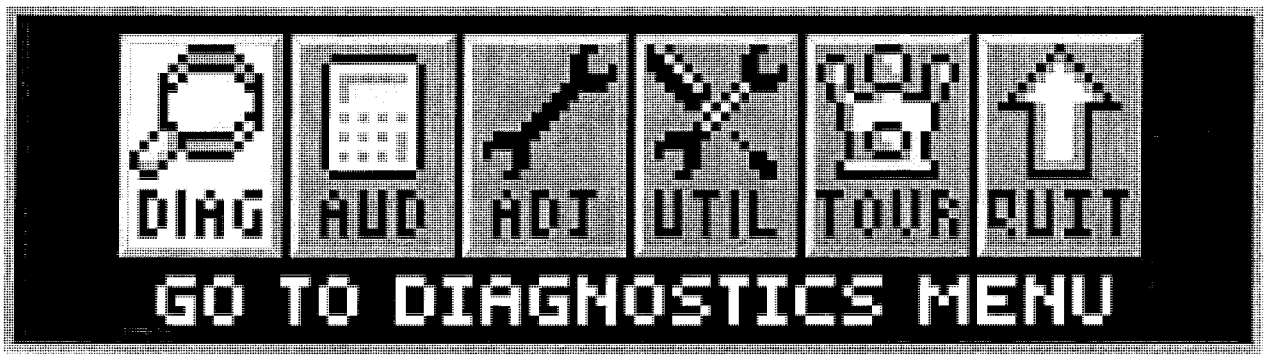

To initiate, from the **MAIN MENU**, select the "DIAG" *Icon*. The **DIAGNOSTICS MENU** provides tests for switches, coils, flash lamps, lamps, sounds and dots in the Dot Matrix Display. Each feature may be tested manually or automatically after entering the **SERVICE MENU** *(see Service Menu Introduction Section)*.
The **[CYCLING COIL TEST] / [FLASH LAMP TEST]** may be used for a quick verification of automatic test functions. The **[SWITCH TEST] / [SINGLE COIL TEST] / [SINGLE LAMP TEST] / [ALL LAMPS TEST] / [ROW LAMPS TEST] / [COLUMN LAMPS TEST] / [FLASH LAMP TEST]** may be used for troubleshooting.

All **DIAGNOSTICS MENU** *Icons* and there usages are explained throughout this chapter in the same order as seen in the Dot Matrix Display. ***NOTE:*** Depending on Game Type, Version, selections made, Dip Switch settings, location and/or areas, some *Icons* may appear non-functional *or* may not appear at all. Some *Icons* change depending on selections *(e.g. Selecting and activating the "STRT" Icon [Start Tournament] will be replaced with the "STOP" Icon [Stop Tournament]).* ***Icons** and/or **functions, order** and **operation are subject to change**.*

In displays where changes can be made *or* to perform a function, use the **GREEN Button** to go **[BACK]**, exit *or* escape, the **RED Buttons** to [< / –] MOVE BACK / LEFT / DECREASE / [+ / >] MOVE FORWARD / RIGHT / INCREASE a value *or* setting, and the **BLACK Button** to **[SELECT]** next *or* as "OK / ENTER / ENERGIZE."

Important:** Upon **Power-Up** (Game CPU Reset) or opening the **Coin Door** watch the **Display** for any **Alerts.*

This ***audible / visual alert display*** is shown when the **50V / 20V Power** is disabled *(by opening the Coin Door).* PULL OUT THE INTERLOCK SWITCH *ONLY* WHILE IN THE SERVICE MENU FOR COIL OR SWITCH TESTING & BURN-IN WHEN THE COIN DOOR IS REQUIRED TO STAY OPEN FOR SERVICE BUTTON USE! Pulling out the Power Interlock Switch or pressing the 'escape' **Green [BACK] Button** will remove the alert display. Initial display presentation is accompanied by 3 audible tones *(the bright display warning will go dim after approximately 30 seconds).*

This ***alert display*** is shown momentarily during **Game Mode** or **Power-Up** to alert the operator of a device malfunction *(device or mechanism doesn't energize or is energized repeatedly).* **OPERATOR ALERT!** works by monitoring any *switch activated device* that has the potential to trap a ball when disabled *(e.g. in the Shooter Lane, Scoop or Eject Holes, etc.).* This alert can also appear if a switch associated with a device *(e.g. Ball Trough, Auto Plunger, etc.)* is stuck closed *(caused by a switch jam or stuck ball)*; the game will activate the device a predetermined number of times and if the problem is still detected, this device *or* switch will be noted in **Switch Alerts** *(next page)* and/or **Technician Alerts**.

Upon entering the **SERVICE MENU**, if an asterisk " * " is displayed after the words "SERVICE MENU," the game has detected possible faulty devices, switches and/or missing pinballs. Press the either of the **Red Buttons** *(short-cut to the TECHNICIAN ALERTS MENU) or* continue into the **SERVICE MENU** *(press the **Black Button** again),* select the "DIAG" *Icon* and "TECH" *Icon* for the **Technician Alerts** information.

CAUTION! Remove all pinballs from the Ball Trough prior to lifting the playfield to it's full upright position for servicing. **PULL OUT** the **Power Interlock Switch** for operation. To eject pinballs, select the "DIAG" *Icon* from the **MAIN MENU** to enter the **DIAGNOSTICS MENU**. Select the "CLR" *Icon* to enter the **BALL TROUGH TEST MENU**. Press the **Black [SELECT] Button**. To return to the **DIAGNOSTICS MENU**, press the **Green [BACK] Button**. *This feature also useful to retrieve a pinball for game testing in **Switch** or **Coil Tests**.*

Go To Switch Menu

To initiate, from the **DIAGNOSTICS MENU**, select the "SW" *Icon*. Switches are configured in an 4 X 16 Matrix of Rows [Switch Drives] and Columns [Sw. Returns] with up to **64** possible switches. Dedicated Switches are configured in a 2 X 16 Matrix of Rows [Dedicated Sw. Drives / Ground] and Column [Ded. Switch Returns] with up to **32** possible dedicated switches *(includes the 8 dip switch positions)*. The **SWITCH TEST MENU** consists of three (3) parts: **Switch & Active Switch Tests** and **Switch Alerts** to test ***all*** switches.

Reminder: *The **Flipper & Start Buttons** (part of Switch Tests) are temporarily disabled as **Service Menu Navigation Buttons** during these test(s) so they can be tested and shown on-screen. Pressinng the **Green [BACK] Button** (Dedicated Switch **D-21**), Light Green-Black / Black (GND), will exit **Switch Test** or **Active Switch Test**.*

Switch Test

To initiate, from the **SWITCH MENU**, select the "TEST" *Icon*. Ensure the **Power Interlock Switch** is pulled out if testing with the Coin Door open and the activation of coils is required. Upon entering **Switch Test**, you will notice that some switches are already indicated as closed. In the examples, the 4-Ball Trough Switches **#18**, **#19**, **#20** & **#21** are shown closed *(pinballs at rest in the ball trough)*, along with the Flipper E.O.S. Dedicated Switches **D-10** & **D-12** (End-of-Stroke Switches are 'normally closed'). If the game has more flippers with E.O.S. Dedicated Switches, CPU Dip Switch Setting *other than* 1-8 OFF or switches stuck closed, more dots will be indicated *(enter **Active Switch Test** to reveal the names)*.

Upon entering **Switch Test**, you will notice that some switches are already indicated as 'closed'. ▼

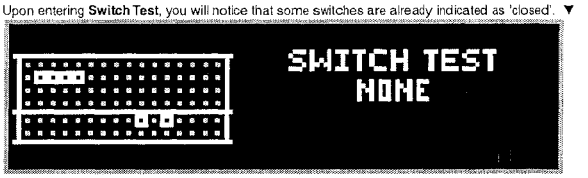

D-24 position is highlighted and accompanied by a short audible tone when pressed. ▼

After pressing the switch *(to make it close)*, the display will indicate the last switch number. ▼

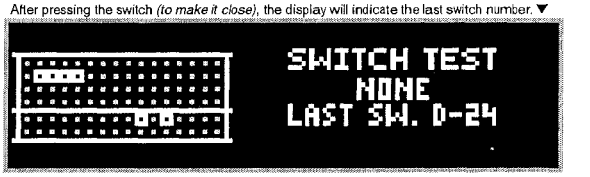

In **Switch Test**, close each switch and observe the display *(switch closure is accompanied by a short audible tone)*. In the example, the **Black [SELECT] Button** Dedicated Switch **D-24** is pressed. The Dot Matrix Display will light up *(highlight)* the corresponding *dot* in the on-screen matrix, display the *switch name*, *switch number* and the *Switch Drive / Return wire colors*. When not closing a switch, the display indicates **NONE** and the last switch number closure. For the Switch Matrix Grid and Dedicated Switch Grid, see **Find-It-In-Front: Dr. Pinball, DR. 4** *or* escape out of this test and enter **Active Switch Test** *(described below)* to view the names of the switches closed. ***Note:*** *Pressinng the **Green [BACK] Button** (Ded. Switch **D-21**), Lt. Green-Black / Black (GND), will exit the **Switch Test**.*

CAUTION! COIL MECHANISMS WHEN ACTIVATED HAVE FAST MOVING PARTS! While performing **Switch Test** with the Coin Door closed *or* open *(with the Power Interlock Switch is pulled out)*, **DO NOT USE YOUR FINGER** to test switches which are associated with a coil mechanism such as a Vertical Up-Kicker *(hole with a switch)*, Slingshots, Bumpers, etc..

Typical Switch Wiring & Schematic

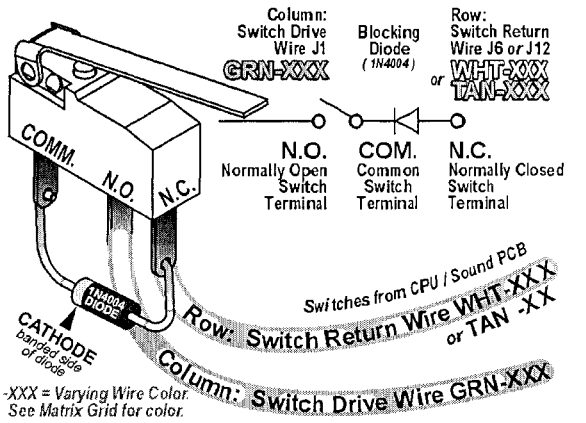

Active Switch Test

To initiate, from the **SWITCH MENU**, select the "ACT" *Icon*. In **Active Switch Test**, if any switches are stuck closed *(or normally closed from the presence of pin-ball(s) as in the Ball Trough)*, the display will flash the corresponding dot(s) in the on-screen matrix, display the *name* and the *Switch Drive / Return wire colors*. If more than one switch is closed, the switch information will change with each switch. This cycle continues until all switches are cleared *or* until **Active Switch Test** is exited. In the example, the **Black [SELECT] Button** Dedicated Switch **D-24** is pressed and held down. The display will cycle and flash each dot, naming each switch which is closed. To determine the *switch number,* compare the highlighted dot to the same position in the Switch Matrix Grid at the beginning of this manual.

Dedicated Switch Schematic

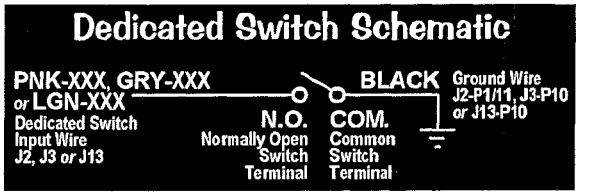

... **D-24** is held down. The display will cycle and flash each dot, naming each switch ... closed. ▼

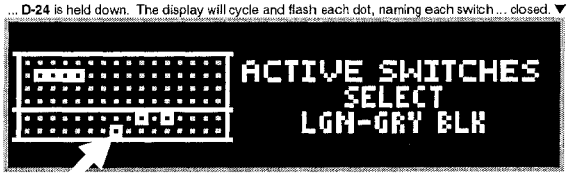

Switch Alerts

To initiate, from the **SWITCH MENU**, select the "ALRT" *Icon*. In **Switch Alerts Menu**, possible inoperable switches are marked with an "X" (OUT OF SERVICE). Mark switches **IN** *or* **OUT OF SERVICE** by pressing the **Black Button** while the intended switch is highlighted and change with either of the **Red Buttons**. Switches which are determined as "OUT OF SERVICE" by the game *or* manually, will be automatically marked as "IN SERVICE" as soon as the game determines a valid switch closure *(after adjusting, fixing or replacing the switch, then testing/actuating the switch)*. ***Note:*** *A **Factory Reset** will also put the switch back "IN SERVICE" in which the game will need to redetermine if the switch should be marked **OUT OF SERVICE**.*

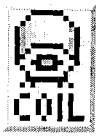

Go To Coil Menu

To initiate, from the **DIAGNOSTICS MENU**, select the "COIL" *Icon.* Coils **#01 – #16** are typically High Current Coils *(although Low Current Coils may be used in these positions & will be noted).* Coils **#17 – #32** are typically Low Current Coils. Flash Lamps are typically used in positions **#25 – #32** *(although Flash Lamps may be used in any position and will be noted).* Auxiliary Coils may be used in positions **#33 – #35**.

Remember, use the **GREEN Button** to go **[BACK]**, exit *or* escape, the **RED Buttons** to [< / –] GO BACK [+ / >] GO FORWARD, and the **BLACK Button** to **[SELECT]** ENERGIZE the coil *(solenoid)* or flash lamp.

Single Coil Test

To initiate, from the **COIL MENU**, select the "TEST" *Icon.* Ensure the **Power Interlock Switch** is pulled out if testing with the Coin Door open. Upon entering **Single Coil Test**, you will notice the #1 coil is shown. The Dot Matrix Display will indicate the *coil or flash lamp name, coil (solenoid) or flash lamp number* and the *Coil or Flash Lamp Power Line / Drive Transistor Control Line wire colors.* To determine the "Pin-Outs" from the I/O Power Driver Board, the Coil Voltage Gauge-Turns *(e.g. 23-800)* or lamp type *(e.g. #89 or #906 Bulb)*, view the Coils Detailed Chart Table at the beginning of this manual *or* for more on troubleshooting and diagnosing, see the Yellow Pages *(Schematics & Wiring).*

Typical Coil Wiring & Schematic

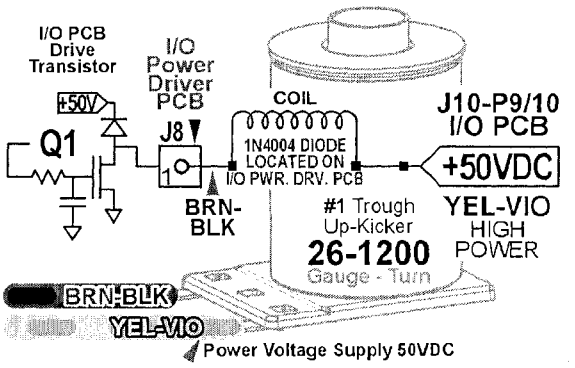

Cycling Coil Test

To initiate, from the **COIL MENU**, select the "CYC" *Icon.* Ensure the **Power Interlock Switch** is pulled out if testing with the Coin Door open. The test pulses each regular coil or flash lamp sequentially *(cycling)* on the Playfield and in the Backbox *(if coils or flash lamps are used).* The Dot Matrix Display indicates the same information you will find in **Single Coil Test**.

Go To Flash Lamps Menu

To initiate, from the **DIAGNOSTICS MENU**, select the "FLASH" *Icon.* The two tests allows the technician to easily spot any burned-out flash lamps and replace them. Unlike **Single Coil Test**, which tests ***all*** coil *(solenoids)*, including flash lamps, **Single** and **Cycling Flash Lamp Tests**, test only the flash lamps used in the game. Flash Lamps are typically used in positions **#25 – #32** *(although Flash Lamps may be used in any position and will be noted).*

Remember, use the **GREEN Button** to go **[BACK]**, exit *or* escape, the **RED Buttons** to [< / –] GO BACK / [+ / >] GO FORWARD, and the **BLACK Button** to **[SELECT]** ENERGIZE the flash lamp.

Single Flash Lamp Test

To initiate, from the **FLASH LAMPS MENU**, select the "TEST" *Icon.* Ensure the **Power Interlock Switch** is pulled out if testing with the Coin Door open. Upon entering **Single Flash Lamp Test**, you will notice the first Flash Lamp is shown. The Dot Matrix Display will indicate the *flash lamp name, flash lamp number* and the *Flash Lamp Power Line / Drive Transistor Control Line wire colors.* To determine the "Pin-Outs" from the I/O Power Driver Board or lamp type *(e.g. #89 or #906 Bulb),* view the Coils Detailed Chart Table at the beginning of this manual *or* for more on troubleshooting and diagnosing, see the Yellow Pages *(Schematics & Wiring).*

Bulb Types used for Flash Lamps

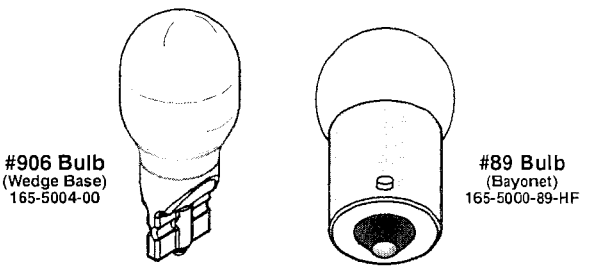

Cycling Flash Lamp Test

To initiate, from the **FLASH LAMPS MENU**, select the "CYC" *Icon* . Ensure the **Power Interlock Switch** is pulled out if testing with the Coin Door open. The test pulses each flash lamp sequentially *(cycling)* on the Playfield and in the Backbox *(if flash lamps are used).* The Dot Matrix Display indicates the same information you will find in **Single Flash Lamp Test**.

Go To Lamp Menu

To initiate, from the **DIAGNOSTICS MENU**, select the "LAMP" *Icon.* Controlled lamps are configured in and 8 X 10 Matrix of Rows [Lamp Returns / Ground] and Columns [Lamp Drives / 18VDC] with up to **80** lamps possible. The **LAMP TEST MENU** consists of five (5) parts: **Single Lamp Test**, **Test All Lamps**, **Row Lamps Test**, **Column Lamps Test** and **Ordered Lamps Test*** to test ***all*** lamps.

Remember, use the **GREEN Button** to go [**BACK**], exit *or* escape, the **RED Buttons** to [< / –] GO BACK / LEFT / [+ / >] GO FORWARD / RIGHT, and the **BLACK Button** to [**SELECT**] next *or* as "OK / ENTER."

Upon entering **Single Lamp Test**, ... the #1 lamp is shown. .... Display will light up ... the *dot* ... ▶

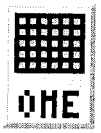

Single Lamp Test

To initiate, from the **LAMP MENU**, select the "ONE" *Icon.* As each lamp is selected, the lamp will light at it's location on the playfield as well as the Dot Matrix Display. Upon entering **Single Lamp Test**, you will notice the #1 lamp is shown. The Dot Matrix Display will light up *(highlight)* the corresponding *dot* in the on-screen matrix, display the *lamp name*, *lamp number* and the *Lamp Return / Drive wire colors.* For the Lamp Matrix Grid, see the beginning section of this Service Game Manual.

Upon entering **All Lamps Test**, ... the Dot Matrix Display is flashing "**ALL LAMPS ON**" ... ▶

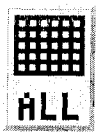

All Lamps Test

To initiate, from the **LAMP MENU**, select the "ALL" *Icon.* Upon entering **All Lamps Test**, you will notice the Dot Matrix Display is flashing **ALL LAMPS ON** and the lamps on the playfield will be lit, alternating between the rows in the Lamp Matrix Grid. The Dot Matrix Display will light up *(highlight)* all of the *dots* in the on-screen matrix.

Upon entering **Row Lamps Test**, you will notice the #1 lamp row is shown. ▶

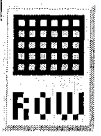

Row Lamps Test

To initiate, from the **LAMP MENU**, select the "ROW" *Icon.* As each lamp row is selected, the lamps in the row will light on the playfield as well as the Dot Matrix Display. Upon entering **Row Lamps Test**, you will notice the #1 lamp row is shown. The Dot Matrix Display will light up *(highlight)* the corresponding row of *dots* in the on-screen matrix, display the *lamp row number*, the *Lamp Return wire colors,* the *I/O PCB Connector* and *transistor number.*

Upon entering **Column Lamps Test**, you will notice the #1 lamp column is shown. ▶

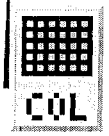

Column Lamps Test

To initiate, from the **LAMP MENU**, select the "COL" *Icon.* As each lamp column is selected, the lamps in the column will light on the playfield as well as the Dot Matrix Display. Upon entering **Column Lamps Test**, you will notice the #1 lamp column is shown. The Dot Matrix Display will light up *(highlight)* the corresponding row of *dots* in the on-screen matrix, display the *lamp column number*, *the Lamp Drive (18VDC) wire colors,* the *I/O PCB Connector* and *IC number.*

Bulb Types used for Control Lamps

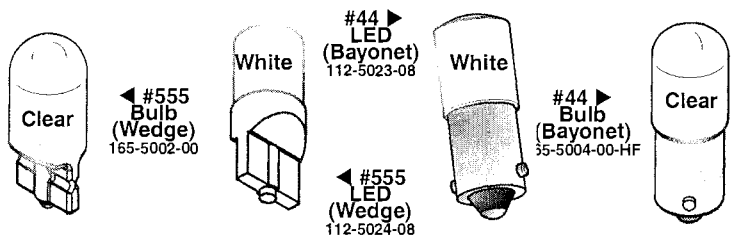

Typical Lamp Wiring & Schematic

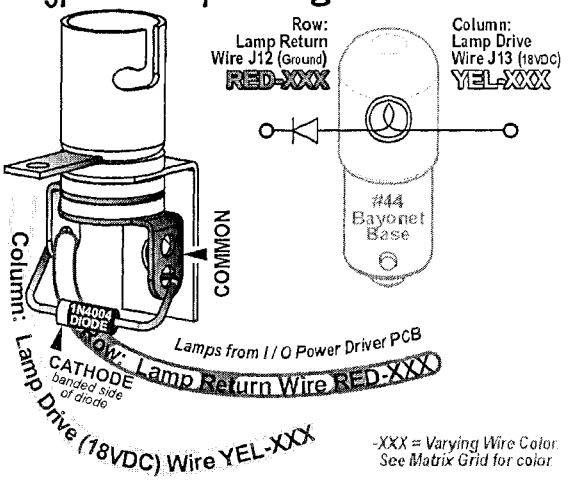

* *If not required in this game, Icon will not be shown.*

Ordered Lamps Test

To initiate, from the **LAMP MENU**, select the "ORD" *Icon.* *If required, this Icon will appear in the **LAMP MENU**.* Identical to **Single Lamp Test**, however, the lamps lit are not in the Lamp Matrix numeric order, but ordered *or* arranged in separate localized grouping(s) for easier lamp checking.

Game-Specific Tests

To initiate, from the **DIAGNOSTICS MENU**, select the "GAME" *Icon.* Ensure the **Power Interlock Switch** is pulled out when testing with the Coin Door open. *This Menu is provided to allow the technician a simple method of testing game specific coils and/or switches, if required. If used, select the Icon (and Sub-Menu Icons, if any) and follow on-screen prompts.*

Ball Trough Test

To initiate, from the **DIAGNOSTICS MENU**, select the "CLR" *Icon.* Ensure the **Power Interlock Switch** is pulled out if testing with the Coin Door open. This Menu is provided to allow the technician a simple method of removing the balls from the trough and also, to test functionality of the trough, ensuring proper trough operation. Upon entering **Ball Trough Test**, you will notice that four switches are already indicated as closed. In the example, the 4-Ball Trough Switches **#18**, **#19**, **#20** & **#21** are shown closed *(pinballs at rest in the ball trough).* To return to the **DIAGNOSTICS MENU**, press the **Green [BACK] Button.**

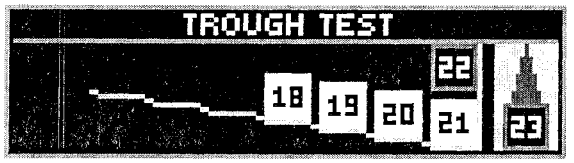

Press the **Black [SELECT] Button** to eject the ball in the first position Switch **#21** (VUK OPTO Trough #1 (R)). Simultaneously, the Dot Matrix Display and the playfield will eject the ball to the Trough Up-Kicker, eject from the Trough Up-Kicker into the Shooter Lane, momentarily closing Switch ***#23*** *(Shooter Lane),* and is ejected onto the playfield where the technician can easily retrieve the pinball or allow the ball(s) to re-enter the trough to continue **Ball Trough Test.** The Dot Matrix Display indicates Switch **#18** (4-Ball Trough #4 (L)) as open as the remaining three (3) pinballs shift over one (1) position to the right. If the technician allows the ejected pinball to reenter the ball trough, the Dot Matrix Display will indicate Switch **#18** as closed. ***REMINDER:*** *Switch #22 is the stacking OPTO switch; If more than five (5) pinballs are used, the additional switches will be noted. Typically, four (4) pinballs are used and required for proper operation; if this amounts differs, it will be noted on the front page of this Service Game Manual.*

CAUTION! *Continuous use off the above test may overheat the Trough Up-Kicker Coil.*

Technician Alerts

To initiate, from the **DIAGNOSTICS MENU**, select the "TECH" *Icon.* This Menu is provided to show any switch *or* solenoid problems and/or missing pinballs. If upon entering the **SERVICE MENU** the display indicated an asterisk (*) and "USE –/+ TO VIEW TECH. ALERTS", alerts are present.

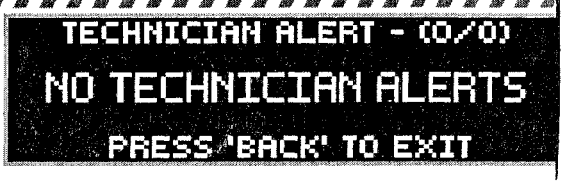

After pressing either **Red [< / –] / [+ / >] Button** *or* selecting this *Icon* in the **DIAGNOSTICS MENU**, the display will indicate the alert(s). If there are 2 alerts present, the display will indicate (1/2) with the 1st alert on the display. Press the **Red [+ / >] Button** to view the second alert (2/2). The second number in the parenthesis ( ) after the slash (/) indicates how many alerts are present. Refer to the start of this chapter *regarding "Upon entering the* **SERVICE MENU** *" indication and to* **SWITCH ALERTS**. To return to the **DIAGNOSTICS MENU**, press the **Green [BACK] Button.** ***Note:*** *While in this menu, an option may be present to jump (short-cut) to the appropriate Testing Menu (e.g. Coil Test, Switch Test, Game Specific Test or Ticket Dispenser Test, if installed).*

NOTE ON SWITCH DETECTION : During game play, activation of switches are continuously monitored. For a switch to be determined as inoperable *or* **OUT OF SERVICE**, up to twenty games *or* so must be played for a switch to be automatically marked as **OUT OF SERVICE**. In programming, if a switch is determined to be faulty, game play is compensated. Switches noted as **OUT OF SERVICE** are determined to be stuck closed *or* open depending on switch usage. Free up the switch actuator, adjust *or* replace, if necessary. Performing a valid switch closure will put the switch back "IN SERVICE."

Determination of switch usage can be checked in **Audits** *(review the Audits Section).* Find the associated Audit with the switch in question and check usage; compare the numbers to commonly used switches. After any switch is checked and repaired *or* replaced, it's suggested to test the switch in the **Switch Test** *or* **Single Coil Test** *(reviewed earlier in this section)* where the associated coil to the switch can be tested as well. After correcting the problem, the switch will marked "IN SERVICE" and the switch is again monitored as specified above. *Only you can determine if a switch marked OUT OF SERVICE is actually inoperable, or if it is just not getting actuated during game play.*

NOTE ON PINBALL DETECTION : While in **TECHNICIAN ALERTS MENU**, if the following is displayed, the game has detected one (1) *or* more pinball(s) missing and has compensated for the lost pinball(s) to provide normal game play.

Technician Alerts continued on the next page.

Technician Alerts continued from previous page.

During game play, a pinball can get trapped *or* stuck. If after approximately 15 seconds of inactivity or "no scoring," **Ball Search** is started. ***Note:*** *If the pinball is in the Plunger Lane or "held" on the flipper, no* ***Ball Search*** *will be performed.* The game will perform one **Ball Search** in an attempt to "find" or free-up the pinball.

If the game does not see a switch closure *(indicating the pinball has not been found),* the Dot Matrix Display may indicate **[LOCATING PINBALLS PLEASE WAIT ...]**, during which **Ball Search** will continue until the timer runs out *(this feature will not happen if the game is in Competition Mode; Ball Search will continue until the pinball is found, unstuck and/or replaced manually).* The display will momentarily acknowledge the missing pinball(s). The game will provide another pinball into play and will compensate for the lost pinball. Game play will appear normal.

Note: *This detection and compensation will happen with every pinball, if each suffers the same fate of a ball trap. If* ***all*** *balls get trapped, the game cannot be played or started until the situation is rectified.*

Important: *Determine where the pinball is!* ***Do not add pinball(s)*** *until it is determined the pinball(s) are indeed missing and not just stuck. The most common places for a pinball to be stuck is in device holes (ejects and VUKs) or* ball troughs. Determine that all devices are functionally properly. Check around plastic pieces and ramps to see if the pinball got jammed *or* stuck.

When the found pinball *or* a replacement pinball is added to the Ball Trough, the **Technican Alert** will immediately clear and will then indicate any remaining alerts *(if present) or* **NO TECHNICIAN ALERTS.**

Enter the **BALL TROUGH TEST** *(review the previous page)* to cycle the pinballs and to check proper switch and coil operation. *If a pinball was added, and the originally stuck pinball has freed itself at a later time, the game will not operate correctly.*

NOTE ON DEVICE MALFUNCTION : While in **TECHNICIAN ALERTS MENU**, if the following is displayed, the game has detected a "device malfunction." Check the device indicated *(coil and/or switch).*

Knocker Test

To initiate, from the **DIAGNOSTICS MENU**, select the "KNO- CKER" *Icon.* The digitally mastered "Knocker" is sounded. The *knocker sound* is used to alert the player if he/she has received a special, replay or a credit from the Match Award feature. Press the **Black [SELECT] Button** to activate the knocker. To return to the **DIAGNOSTICS MENU**, press the **Green [BACK] Button**.

FACTOID: *The knocker got it's name from the 'original knocker' (20th century pinball games), which used a coil and when energized (fired), the plunger would strike a wood panel inside the cabinet.*

Sound / Speaker Test

To initiate, from the **DIAGNOSTICS MENU**, select the "SPKR" *Icon.* This system produces true digital stereo sound from Backbox & Cabinet Speakers or *"Mono"* on the Cabinet Speaker *(when used by itself).* This Menu is provided to allow the technician a simple method of testing the speakers if rewired or replaced.

Upon entering **Sound / Speaker Test**, you will notice the Dot Matrix Display indicating the first option of *available* music *and/or* sound(s) in this test. Press the **Red [+ / >] Button** to cycle through the *available* music *and/or* sounds, and press the **Black [SELECT] Button** to play the option shown in the Dot Matrix Display. Press the **Green [BACK] Button** to exit.

Speaker Phase Testing

Connections to each of speakers are polarized and each must be connected appropriately for the best quality sound. If one speaker has the positive and negative connections reversed with respect to the other one, bass frequencies will not be produced properly and the overall sound quality will be poor. To test for proper speaker phasing, use the **Sound / Speaker Test** to cycle through the available music and sound.

Speaker Phase Testing cont. next page.

Speaker Phase Testing continued from previous page.

If the sound is not balanced or doesn't sound correct, check the speaker wiring.

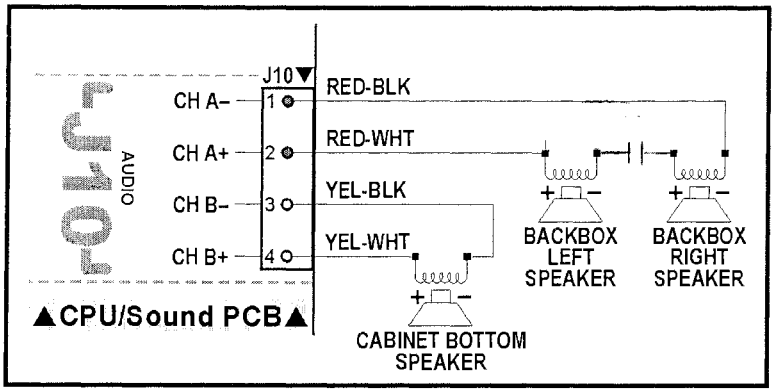

1. Check each speaker for polarity markings. If the speakers have polarity markings, verify that the Backbox Speaker's **RED-BLK** Wires and the Cabinet Speaker **YEL-BLK** Wire(s) are connected to the negative (–) terminal.

2. Disconnect the speaker output **Connector J10 (AUDIO)** from the CPU / Sound PCB *(in the Backbox)* and connect a 1.5-volt battery across each speaker pair one at a time while observing the speakers.

3. Make sure the positive (+) battery terminal is connected to the positive lead [J10, Pin-2, **CH A+**] (**RED-WHT**) *or* [J10, Pin-4, **CH B+**] (**YEL-WHT**) each time. As the connection is made, check speaker cone movement; proper connections are indicated by outward movement.

Begin Burn-In

To initiate, from the **DIAGNOSTICS MENU**, select the "BURN" *Icon*. After selecting this *Icon*, press the **Black [SELECT] Button** to begin (initiate) the ***Burn-In Test***. Ensure the **Power Interlock Switch** is pulled out if testing with the Coin Door open *(required for coil function)*. Upon entering **Burn-In Test**, the game will exercise all CPU I/O Functions: **Dot Matrix Display Test**, **Coil Cycling Testing**, **All Lamps Test** and **Sound / Speaker Test**. Press the **Green [BACK] Button**, to pause and to view the cumulative Burn-In minutes. Press the **Green [BACK] Button** again to return to the **DIAGNOSTICS MENU**.

Note: *To reset Burn-In minutes back to **0:00**, see Section **3**, Chapter **5, GO TO RESET MENU** (via the UTILITIES MENU), **Reset Factory Settings**. ⚠ **CAUTION:** Performing a **FACTORY RESET** will reset all other information as well (read the Utilities Section (**GO TO RESET MENU**), for more information).*

Dot Matrix Test

To initiate, from the **DIAGNOSTICS MENU**, select the "DOT TEST" *Icon*. After selecting this *Icon* the **Dot Matrix Test** immediately begins. The Dot Matrix Display will immediately and continuously illuminate and cycle each of the ***5 Tests for 1 pass each***. To return to the **DIAGNOSTICS MENU**, press the **Green [BACK] Button**.

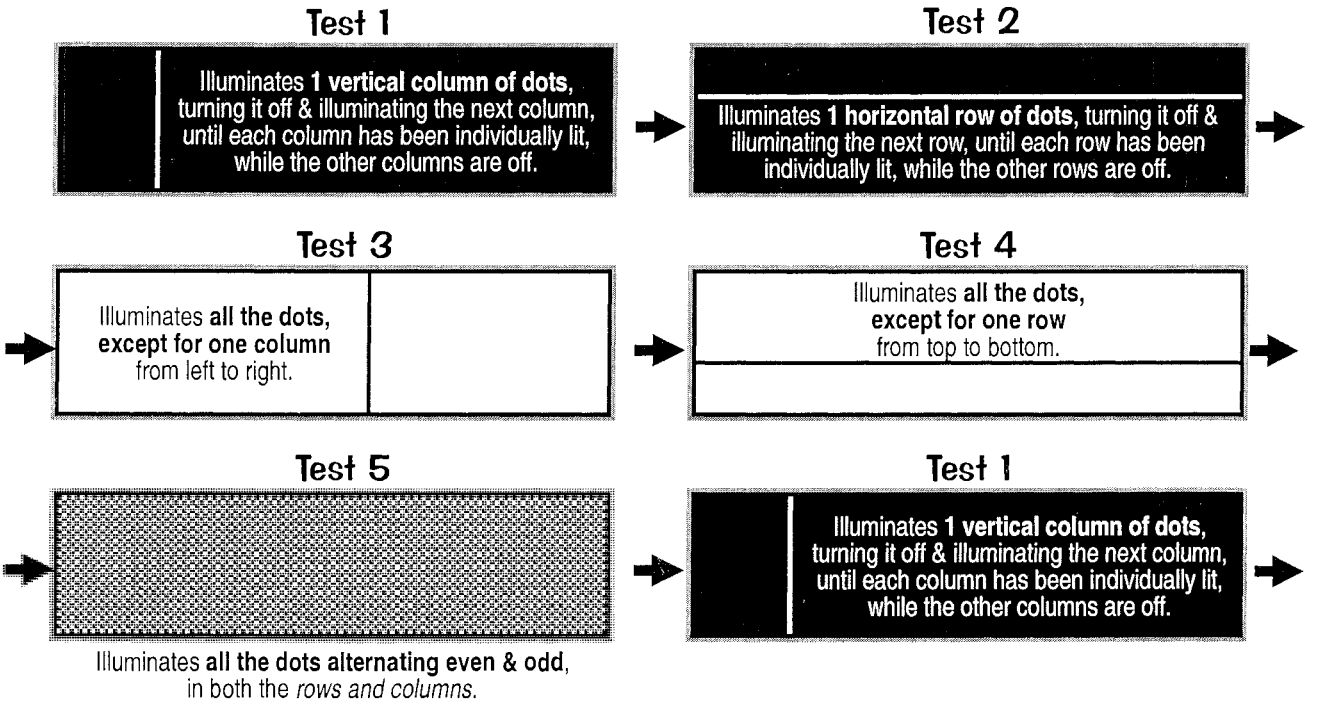

Ticket Dispenser Test

To initiate, from the **DIAGNOSTICS MENU**, select the "TIX" *Icon*. This Menu *(Icon) will only appear* if **Standard Adjustment 56, Ticket Dispenser**, is set to **YES** (Default = **NO***). ***Note:** *Some games shipped from the factory with a unique Dip Switch Setting will default to **YES**). To view and/or change your setting, see Adjustments Section (**GO TO ADJUSTMENTS MENU**). Please remember, if you install an optional Ticket Dispenser, and your default setting is "NO," you will have to reset it back to "YES" if a **Factory Reset** is performed.*

After selecting this *Icon*, the ***Ticket Dispenser Test*** will start. With the Ticket Dispenser properly installed, manually feed your tickets into the dispenser. The dispenser will activate and pull in the first ticket. Press the **Black [SELECT] Button** (which energizes Coil #35, Aux 3: Switched Ground) to advance a ticket. Feeding your Tickets into the dispenser works because Coil #33, Aux 1: Ticket Advance (Enable) is always 'energized'. With a Ticket Meter installed, as one Ticket Passes through the Ticket Dispenser, one 'click' is fired to the Meter (Coil #34, Aux 2: Ticket Meter) for each ticket passing through. Dedicated Switch **D-19, Ticket Notch**, will also be indicated on-screen *(in combination with a audible sound)* as "closing" as the notch between the tickets passes through. In this test you can clear ticket jams and check and/or clear tickets in Escrow, if necessary. To return to the **DIAGNOSTICS MENU**, press the **Green [BACK] Button**.

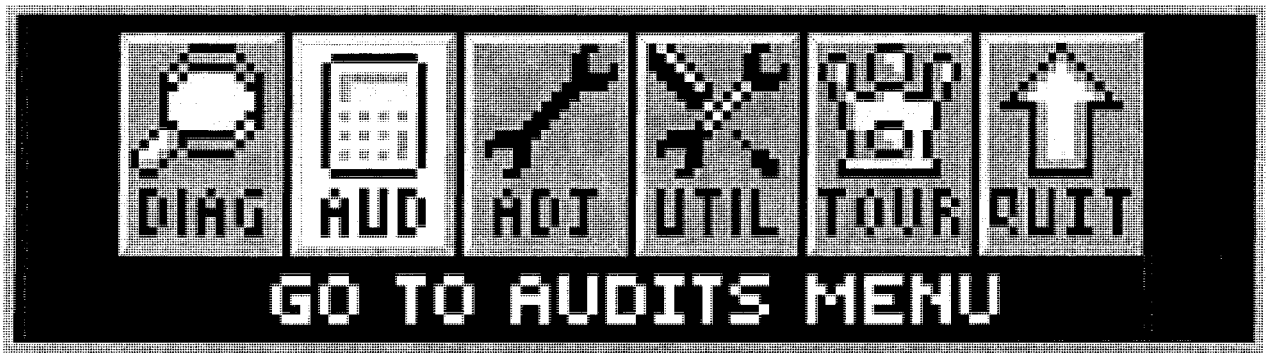

To initiate, from the **MAIN MENU**, select the "AUD" *Icon*. The **AUDITS MENU** provides 99* Audits for accounting purposes and for evaluation of *Game Programming*. The Audits are divided into 4 groups: • **Earnings Audits [#1 – #13]**, • **Standard Audits [#1 – #59]**, • Feature Audits (Programming Use Only) [#1 – #+] and • Tournament Audits [#1 – #14], "T AUD" *Icon* provided as an alternate access to Tournament Audits *(*if data is available)*. For more information on the **TOURNAMENT MENU**, *review the Tournament Section (**GO TO TOURNAMENT MENU**). Try the "**DUMP AUDITS TO USB**" feature to create a text file of your audits. Don't forget to set the DATE & TIME in the **UTILITIES MENU**. See the Utilities Section (**GO TO UTILITIES MENU**), for more information.*

Audits which are named **Proprietary** are also for ***Future Expansion*** or ***Programming***. Game code may get upgraded during production; compare all Audits in the Dot Matrix Display with the manual and make any corrections, as necessary. Audits are subject to change *(with or without notice)*.

All **AUDITS MENU** *Icons* and there usages are explained throughout this chapter in the same order as seen in the Dot Matrix Display. ***NOTE:*** Depending on Game Type, Version, selections made, Dip Switch settings, location and/or areas, some *Icons* may appear non-functional *or* may not appear at all. ***Icons** and/or **functions, order** and **operation are subject to change**.*

In displays where changes can be made *or* to perform a function, use the **GREEN Button** to go [**BACK**], exit *or* escape, the **RED Buttons** to [< / –] MOVE BACK / LEFT / [+ / >] MOVE FORWARD / RIGHT to view the next audit in the group, and the **BLACK Button** to [**SELECT**] the sub-menus.

Earnings Audits [#1 – #13]

To initiate, from the **AUDITS MENU**, select the "EARN" *Icon*. The Dot Matrix Display will indicate the *audit number (in this group)*, *audit name* and the *audit total or value*. The current audit will remain on the display until the next audit is viewed or when this sub-menu is exited.

#1 **TOTAL PAID CREDITS [0] :** Total number of *Paid Credits.*

#2 **FREE GAME PERCENTAGE [0%] :** Percentage value is 'Total Free Plays' (Standard Audit **15**) divided by 'Total Plays' (Standard Audit **16**).

#3 **AVERAGE BALL TIME [0:00] :** In seconds, the average ball time is derived from the total play time divided by Standard Audit **1**, Total Balls Played.

#4 **AVERAGE GAME TIME [0:00] :** The average game time is expressed in minutes and seconds.

#5 **COINS THROUGH LEFT SLOT [0] :** Total 'Left Coin Slot' Dedicated Switch (**D-1**) closures.

#6 **COINS THROUGH RIGHT SLOT [0] :** Total 'Right Coin Slot' Dedicated Switch (**D-3**) closures.

#7 **COINS THROUGH CENTER SLOT [0] :** Total 'Center Coin Slot' Dedicated Switch (**D-2**) closures.

#8 **COINS THROUGH FOURTH SLOT [0] :** Total '4th Coin Slot' Dedicated Switch (**D-4**) closures.

#9 **COINS THROUGH FIFTH SLOT [0] :** Total '5th Coin Slot' Dedicated Switch (**D-5**) closures.

#10 **TOTAL COINS [0] :** Total amount of coins registered through all the *Coin Slots.*

#11 **TOTAL EARNINGS [USD 0.00] :** Total cash value accumulated since the last Factory Reset occurred *(reveiw the Utilities Section (**GO TO RESET MENU**), **Reset Coin Audits**).*

#12 **METER CLICKS [0] :** Total number of money clicks accumulated.
Based on the country's lowest coin denomination used for the game credit.

#13 **SOFTWARE METER [0] :** Continuing total of Meter Clicks.
This audit cannot be reset; the display shows the constant addition of Meter Clicks.

Standard Audits [#1 – #59]

To initiate, from the **AUDITS MENU**, select the "S.P.I." *Icon.* The Dot Matrix Display will indicate the *audit number (in this group), audit name* and the *audit total or value.* The current audit will remain on the display until the next audit is viewed or when this sub-menu is exited.

#1 **TOTAL BALLS PLAYED [0] :** Total number of *Regular* and *Extra Balls.*

#2 **TOTAL EXTRA BALLS [0] :** Total number of *Extra Balls* awarded.

#3 **EXTRA BALLS PERCENTAGE [0%] :** Percentage value is 'Total Extra Balls' (Standard Audit **2**) divided by 'Total Plays' (Standard Audit **16**).

#4 **REPLAY 1 AWARDS [0] :** Total *Awards (Credits, Extra Balls or Scores)* for Level 1.

#5 **REPLAY 2 AWARDS [0] :** Total *Awards (Credits, Extra Balls or Scores)* for Level 2.

#6 **REPLAY 3 AWARDS [0] :** Total *Awards (Credits, Extra Balls or Scores)* for Level 3.

#7 **REPLAY 4 AWARDS [0] :** Total *Awards (Credits, Extra Balls or Scores)* for Level 4.

#8 **TOTAL REPLAYS [0] :** Total *Awards (Credits, Extra Balls or Scores)* for exceeding *Replay Score Levels.*

#9 **REPLAY PERCENTAGE [0%] :** Percentage value is 'Total Replays' (Standard Audit **8**) divided by 'Total Plays' (Standard Audit **16**). *The percentage reflects replay total awards for exceeding replay score levels.*

#10 **TOTAL SPECIALS [0] :** Total *Awards (Credits, Extra Balls, or Scores)* for making *Specials.*

#11 **SPECIAL PERCENTAGE [0%] :** Percentage value is 'Total Specials' (Standard Audit **10**) divided by 'Total Plays' (Standard Audit **16**).

#12 **TOTAL MATCHES [0] :** Total *Credits* awarded for matching the last two digits of the score with the *System-Generated Match Number* at the end of the game. Percentage of *Match Credits* is adjustable from **0%** to **10%** or **OFF** by Standard Adjustment **19,** Match Percentage, *if enabled (review the Adjustments Section (**GO TO ADJUSTMENTS MENU**), **Standard Adjustments**).*

#13 **HIGH SCORE AWARDS [0] :** Total *Awards (Credits, Extra Balls, or Scores)* for exceeding the High-Score-To-Date scores.

#14 **HIGH SCORE PERCENT [0%] :** Percentage value is 'High Score Awards' (Standard Audit **13**) divided by 'Total Plays' (Standard Audit **16**).

#15 **TOTAL FREE PLAYS [0] :** Total *Free Credits* for *Replays, High-Score-To-Date, Specials and Match.*

#16 **TOTAL PLAYS [0] :** This total is derived by adding the sum of 'Total Paid Credits' (Earnings Audit 1) and 'Total Free Plays' (Standard Audit **15**). *Note: Free credits are not recorded in the Audit until actually used.*

#17 **0.0M–1.99M SCORES [00] :** Total number of games the Player's final score was between **0** and **1,999,990** points.

#18 **2.0M–3.99M SCORES [00] :** Total number of games the Player's final score was between **2,000,000** and **3,999,990** points.

#19 **4.0M–5.99M SCORES [00] :** Total number of games the Player's final score was between **4,000,000** and **5,999,990** points.

#20 **6.0M–7.99M SCORES [00] :** Total number of games the Player's final score was between **6,000,000** and **7,999,990** points.

#21 **8.0M–9.99M SCORES [00] :** Total number of games the Player's final score was between **8,000,000** and **9,999,990** points.

#22 **10.0M–12.49M SCORES [00] :** Total number of games the Player's final score was between **10,000,000** and **12,499,990** points.

#23 **12.5M–14.99M SCORES [00] :** Total number of games the Player's final score was between **12,500,000** and **14,499,990** points.

#24 **15.0M–17.49M SCORES [00] :** Total number of games the Player's final score was between **15,000,000** and **17,499,990** points.

#25 **17.50M–19.99M SCORES [00] :** Total number of games the Player's final score was between **17,500,000** and **19,999,990** points.

#26 **20.0M–24.99M SCORES [00] :** Total number of games the Player's final score was between **20,000,000** and **24,999,990** points.

#27 **25.0M–29.99M SCORES [00] :** Total number of games the Player's final score was between **25,000,000** and **29,999,990** points.

Standard Audits 28-59 continued on the next page.

#28 **30.0M–39.99M SCORES [00] :** Total number of games the Player's final score was between **30,000,000** and **39,999,990** points.

#29 **40.0M–49.99M SCORES [00] :** Total number of games the Player's final score was between **40,000,000** and **49,999,990** points.

#30 **50.0M–74.99M SCORES [00] :** Total number of games the Player's final score was between **50,000,000** and **74,999,990** points.

#31 **75.0M–99.99M SCORES [00] :** Total number of games the Player's final score was between **75,000,000** and **99,999,990** points.

#32 **100.0M–149.99M SCORES [00] :** Total number of games the Player's final score was between **100,000,000** and **149,999,990** points.

#33 **150.0+M SCORES:** Total number of games the Player's final score was **150,000,000** points and over.

#34 **AVERAGE SCORES [00] :** This total is derived by adding the Final Score of each game to a table and dividing this sum by 'Total Plays' (Standard Audit **16**).

#35 **SERVICE CREDITS [0] :** Total 'Green [SERVICE CREDIT] Button' Dedicated Switch (**D-21**) closures in **Attract Mode** *(not while in the **SERVICE MENU**). See the Service Menu Section, **Service Switch X4 Set Access & Use**, for how to receive Service Credits. See the Utilities Section (**GO TO RESET MENU**), **Reset Credits**, for how to delete credits.*

#36 **BALL SEARCH STARTED [0] :** Total number of times the game performed a *Ball Search.*

#37 **LOST BALL FEEDS [0] :** Total number of times the game added a pinball to play when it could not find a pinball after *Ball Search (review the Diagnostics Section (**GO TO DIAGNOSTICS MENU**), **Technicians Alert** [Pinball Detection]).*

#38 **LOST BALL GAME STARTS [0] :** Total number of times the game started with a pinball missing from the ball trough at the start of a game *(review the Diagnostics Section (**GO TO DIAGNOSTICS MENU**), **Technicians Alert** [Pinball Detection]).*

#39 **LEFT DRAINS [0] :** Total 'Left Outlane' Switch (**24**) closures.

#40 **CENTER DRAINS [0] :** Total number of times the pinball had drained when the last switch closed was not the 'Left Outlane' (**24**) *or* the 'Right Outlane' Switch (**29**).

#41 **RIGHT DRAINS [0] :** Total 'RIght Outlane' Switch (**29**) closures.

#42 **TILTS [0] :** Total 'Tilt Pendulum' Dedicated Switch (**D-17**) closures.

#43 **TOTAL BALLS SAVED [0] :** Total number of times this feature was used. This feature is adjustable from **0:01–0:15**, **AUTO** or **NO BALL SAVES** *(review the Adjustments Section (**GO TO ADJUSTMENTS MENU**), Standard Adj. **48**, Ball Save Time). This feature is enabled at the start of each pinball and is disabled as soon as a predetermined number of switches are "closed" **or** the allocated time has expired.*

#44 **LEFT FLIPPER USED [0] :** Total 'Left Flipper Button' Dedicated Switch (**D-9**) closures in **Game Mode**.

#45 **RIGHT FLIPPER USED [0] :** Total 'Right Flipper Button' Dedicated Switch (**D-11**) closures in **Game Mode**.

#46 **0 - 1 MINUTE GAMES [0] :** Total games in which the total game time was between **0:00** and **1:00** minute.

#47 **1 – 1.5 MINUTE GAMES [0] :** Total games where play time was between **1:00** and **1:30** minutes.

#48 **1.5 – 2 MINUTE GAMES [0] :** Total games where play time was between **1:30** and **2:00** minutes.

#49 **2 – 2.5 MINUTE GAMES [0] :** Total games where play time was between **2:00** and **2:30** minutes.

#50 **2.5 – 3 MINUTE GAMES [0] :** Total games where play time was between **2:30** and **3:00** minutes.

#51 **3 – 3.5 MINUTE GAMES [0] :** Total games where play time was between **3:00** and **3:30** minutes.

#52 **3.5 – 4 MINUTE GAMES [0] :** Total games where play time was between **3:30** and **4:00** minutes.

#53 **4 – 5 MINUTE GAMES [0] :** Total games where play time was between **4:00** and **5:00** minutes.

#54 **5 – 6 MINUTE GAMES [0] :** Total games where play time was between **5:00** and **6:00** minutes.

#55 **6 – 8 MINUTE GAMES [0] :** Total games where play time was between **6:00** and **8:00** minutes.

#56 **8 – 10 MINUTE GAMES [0] :** Total games where play time was between **8:00** and **10:00** minutes.

#57 **10 – 15 MINUTE GAMES [0] :** Total games where play time was between **10:00** and **15:00** minutes.

#58 **15+ MINUTE GAMES [0] :** Total games in which the total game time was **15:00** minutes and over.

#59 **RECENT REPLAY PERCENT [0%] :** *Percent figured with programming thresholds for a determined number of games. The % reflects replay total awards for exceeding replay score levels.*

Feature Audits [#1 – #+]

To initiate, from the **AUDITS MENU**, select the "GAME" *Icon.* The Dot Matrix Display will indicate the *audit number (in this group), audit name* and the *audit total or value.* The current audit will remain on the display until the next audit is viewed or when this sub-menu is exited.

Feature Audits Definition: Programming Use Only. *The proprietary information Total number of times a feature was started, awarded, lit, played and/or completed (awarded); also, the total number of Switch Closures during certain modes or features are tracked (a predetermined single/multiple variations of switch closures are used to determine the lighting and/or completion of the feature stated). SEE THE DOT MATRIX DISPLAY FOR CURRENT FEATURE AUDITS.*

Feature Audits are subject to change *(with or without notice).* View Feature Audits on the Dot Display only. To export all audits to your memory stick *(creating a text file),* perform the following. Enter the **AUDITS MENU**, then enter the **DUMP AUDITS TO USB**. ***Note:*** *The "DUMP" Icon can also be accessed in the **USB MENU** via the **UTILITIES MENU** (see the Utilities Section (**GO TO USB MENU**) for details).*

Tournament Audits [#1 – #14] subject to change

"T AUD" *Icon* provided as an alternate access to Tournament Audits *(if data is available).* For more information on the **TOURNAMENT MENU**, *review the Tournament Section (**GO TO TOURNAMENT MENU**).*

Dump Audits To USB (Memory Stick)

To initiate, from the **USB MENU**, select the "DUMP" *Icon.* Follow the on-screen prompts to perform a **Data Dump** *(download).* A dated text file will be created on your USB Memory Stick.

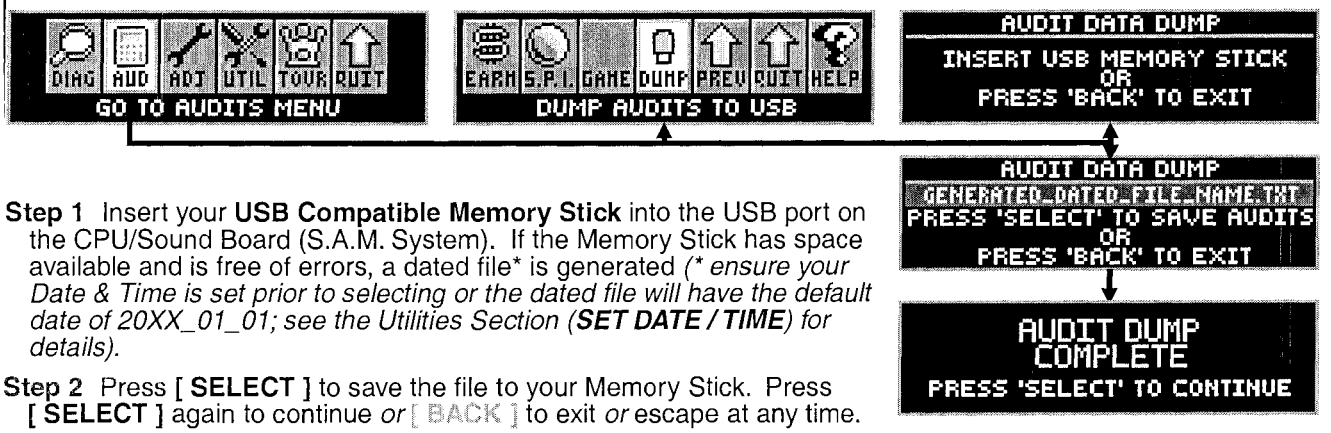

Step 1 Insert your **USB Compatible Memory Stick** into the USB port on the CPU/Sound Board (S.A.M. System). If the Memory Stick has space available and is free of errors, a dated file* is generated *(* ensure your Date & Time is set prior to selecting or the dated file will have the default date of 20XX_01_01; see the Utilities Section (**SET DATE / TIME**) for details).*

Step 2 Press **[SELECT]** to save the file to your Memory Stick. Press **[SELECT]** again to continue *or* [BACK] to exit *or* escape at any time.

Step 3 Remove the Memory Stick and insert into your PC *or* Mac to save the file *(which can then be copied, printed or emailed).* The audits are numbered sequentially ***without*** a number restart between the three types of audits *(Earnings, Standard and Feature).*

> ***Note:*** *The "DUMP" Icon can also be accessed in the **USB MENU** via the **UTILITIES MENU** (see the Utilities Section (**GO TO USB MENU**) for details).*

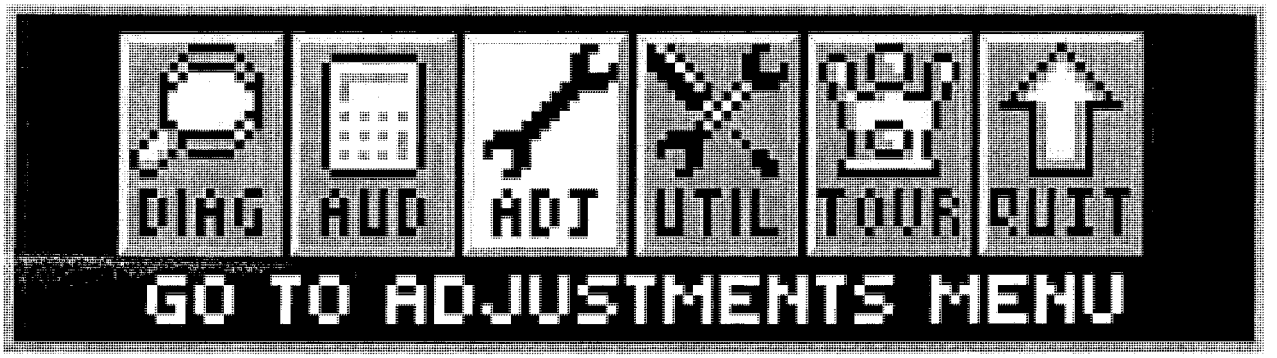

To initiate, from the **MAIN MENU**, select the "ADJ" *Icon*. The **ADJUSTMENTS MENU** provides 64+/– Adjustments to vary Game Functions to customize for your particular needs. The Adjustments are divided into 2 groups:
• **Standard Adjustments [#1 – #63]** and • Feature Adjustments (Programming Use Only) [#1 – #+].
*For **quick** and **easy customization** of **Game Play Difficulty** or **Game Play Type** or how to **RESET ONLY** the Adjustments, review the Utilities Section (**GO TO INSTALLS MENU**). **Shortcut: Enter Custom Message** (Standard Adj. **41**) and **Set Custom Pricing** (via Standard Adjustment **18**, Game Pricing) can be quickly accessed via the **UTILITIES MENU**. See the Utilities Section (**GO TO UTILITIES MENU**), for more information.*

Adjustments which are named **Proprietary** are also for ***Future Expansion*** or ***Programming***. Game code may get upgraded during production; compare all Adjustments in the Dot Matrix Display with the manual and make any corrections, as necessary. Adjustments are subject to change *(with or without notice)*.

All **ADJUSTMENTS MENU** *Icons* and there usages are explained throughout this chapter in the same order as seen in the Dot Matrix Display. ***NOTE:*** Depending on Game Type, Version, selections made, Dip Switch settings, location and/or areas, some *Adjustments* may appear non-functional *or* may not appear at all. ***Adjustments** and/or **functions, order** and **operation are subject to change**. **If in doubt use the Factory Default Settings**.*

In displays where changes can be made *or* to perform a function, use the **GREEN Button** to go **[BACK]**, exit *or* escape, the **RED Buttons** to [< / –] SELECT PREVIOUS [+ / >] SELECT NEXT when the adjustment name *or* setting is flashing and the **BLACK Button** to **[SELECT]** toggle between the ADJUSTMENT and SETTING.

Standard Adjustments [#1 – #63]

To initiate, from the **ADJUSTMENTS MENU**, select the "S.P.I." *Icon*. The Dot Matrix Display will indicate the *adjustment number (in this group), adjust. name, adjust. setting* and *comment line*. The current adjustment will remain on the display until the next adjustment is viewed or when this sub-menu is exited.

#1 **REPLAY TYPE:** Set to **AUTO**, **NONE**, **FIXED** *or* **DYNAMIC**. Factory Default = **AUTO**. **AUTO** & **DYNAMIC** are based on the **Replay Percentage** *(Standard Adjustment **2**)*. • Select **FIXED** to give the player a **Replay Award** *(Standard Adjustment **3**)* as the **Replay Levels** *(Standard Adjustments **7-10**)* are reached. The **Replay Level(s)** *(Standard Adjustments **7-10**)* will not adjust up or down. • Select **AUTO** to give the player a **Replay Award** *(Standard Adjustment **3**)* as the **Auto Replay Start** *(Standard Adjustment **5**)* score level is reached. This *score threshold* will automatically adjust up or down based on the **Replay Percentage** chosen *(Standard Adjustment **2**)*. The game periodically adjusts based upon the Player Base Skill Level. • Select **DYNAMIC** to give the player a **Replay Award** *(Standard Adjustment **3**)* as the **Dynamic Replay Start** (Standard Adjustment **6**) score level is reached. This *score threshold* will go down every game based on the **Replay Percentage** *(Standard Adjustment **2**)* selected. • Select **NONE** to turn off Standard Adjustments **2-11**.

#2 **REPLAY PERCENTAGE:** Set between **1% – 50%**. Factory Default = **10%**. Adjustable only if **AUTO** *or* **DYNAMIC** is installed in Replay Type, Standard Adjustment **1**. For [**DYNAMIC**] example, if the *score threshold* is 50,000,00 and the **Replay Percentage** selected is **10%**, every game a player does not reach the *score threshold*, the score to reach will drop by 5,000,000 (10% of 50M). This will continue every game until the *threshold score* is reached. Thus, if the score then drops to 15,000,000 after 7 games and is then achieved, the **Replay Award** *(Standard Adjustment **3**)* is given. The original *score threshold* is added to 15,000,000 and is now 65,000,000. It will then take the same player 10 games to reach 15,000,000. *This adjustment is shown only if **AUTO** or **DYNAMIC** is installed in **Replay Type** (Standard Adjustment **1**).*

Standard Adjustments 3-18 continued on the next page.

#3 **REPLAY AWARD:** Set to **CREDIT**, **TICKET***, **TOKEN*** *or* **EXTRA BALL**. Factory Default = **CREDIT**. Set the type of award to be given to the player when the appropriate Replay Score threshold or level is acheived. If awarding a ***CREDIT***, ***TICKET*** *or* ***TOKEN*** is prohibited in your area, select **EXTRA BALL**. *This adjustment is not shown if* ***NONE*** *is installed in* ***Replay Type*** *(Standard Adjustment* ***1****).*

Note:* *If* ***TICKET* *or* ***TOKEN*** *is selected, the game will require an optional Ticket or Token Dispenser and then* ***Q24 Option*** *(Standard Adj.* ***55****) must be changed accordingly.*

#4 **REPLAY LEVELS:** Set between **1 – 4** for the number of Replay Levels to be active. Factory Default = 1. *This adjustment is not shown if* ***NONE*** *is installed in* ***Replay Type*** *(Standard Adjustment* ***1****).*

#5 **AUTO REPLAY START:** Set between **5,000,000 – 150,000,000** *(increments of 1,000,000)* for the Auto Replay Start threshold. Factory Default = __,000,000. *This adjustment is shown only if* ***AUTO*** *is installed in* ***Replay Type*** *(Standard Adjustment* ***1****).*

#6 **DYNAMIC REPLAY START:** Set between **5,000,000 – 150,000,000** *(increments of 1,000,000)* for the Dynamic Replay Start threshold. Factory Default = __,000,000. *This adjustment is shown only if* ***DYNAMIC*** *is installed in* ***Replay Type*** *(Standard Adjustment* ***1****).*

#7 **REPLAY LEVEL #1:** Set between **5,000,000 – 150,000,000** *(increments of 1,000,000).* Factory Default = __,000,000. Set the first *or* only Replay Level. *This adjustment is shown only if* ***FIXED*** *is installed in* ***Replay Type*** *(Standard Adjustment* ***1****).*

#8 **REPLAY LEVEL #2:** Set between **5,000,000 – 150,000,000** *(increments of 1,000,000).* Factory Default = __,000,000. Set the second Replay Level. *This adjustment is shown only if* ***FIXED*** *is installed in* ***Replay Type*** *(Standard Adjustment* ***1****) and* ***2*** *is intalled in* ***Replay Levels*** *(Standard Adjustment* ***4****).*

#9 **REPLAY LEVEL #3:** Set between **5,000,000 – 150,000,000** *(increments of 1,000,000).* Factory Default = __,000,000. Set the third Replay Level. *This adjustment is shown only if* ***FIXED*** *is installed in* ***Replay Type*** *(Standard Adjustment* ***1****) and* ***3*** *is intalled in* ***Replay Levels*** *(Standard Adjustment* ***4****).*

#10 **REPLAY LEVEL #4:** Set between **5,000,000 – 150,000,000** *(increments of 1,000,000).* Factory Default = __,000,000. Set the fourth Replay Level. *This adjustment is shown only if* ***FIXED*** *is installed in* ***Replay Type*** *(Standard Adjustment* ***1****) and* ***4*** *is intalled in* ***Replay Levels*** *(Standard Adjustment* ***4****).*

#11 **REPLAY BOOST:** Set to **YES** *or* **NO**. Factory Default = **YES**. When set to **YES**, while **FIXED** or **AUTO** maintains the Replay Levels, Replay Boost works as follows: If the Replay Level is 7,000,000 *(regardless of the Replay Percentage)*, and the Player scores 20M, and receives the Replay Award, the next game the Current Replay Level is added to this base. Thus the next game, the Replay Level is 14,000,000. The Player agains scores 20M. The next game the Player will need to achieve 21,000,000 to earn the Replay Award. If the Player does not achieve 21,000,000, the next game reverts back to the original 7,000,000 or the new adjusted level maintained by the Fixed or Autopercentaging Feature. *This adjustment is shown only if* ***AUTO*** *or* ***FIXED*** *is installed in* ***Replay Type*** *(Standard Adjustment* ***1****).*

#12 **SPECIAL LIMIT:** Set between **1 – 5, UNLIMITED** *or* **NO SPECIALS**. Factory Default = 1. Set the maximum number of *Specials* that may be accumulated per game.

#13 **SPECIAL PERCENTAGE:** Set between **1% – 50%**. Factory Default = 10%. This adjustment allows the operator to adjust how frequently the ***Special Feature*** is made available to the player. *This adjustment is not shown if* ***NO SPECIALS*** *is installed in* ***Special Limit*** *(Standard Adjustment* ***12****).*

#14 **SPECIAL AWARD:** Set to **CREDIT**, **TICKET***, **TOKEN***, **POINTS** *or* **EXTRA BALL**. Factory Default = **CREDIT**. Select **EX. BALL** or **POINTS** if awarding a ***CREDIT*** or ***TICKET / TOKEN*** is prohibited in your area. *This adjustment is not shown if* ***NO SPECIALS*** *is installed in* ***Special Limit*** *(Standard Adjustment* ***12****).*

Note:* *If* ***TICKET* *or* ***TOKEN*** *is selected, the game will require an optional Ticket or Token Dispenser and then* ***Q24 Option*** *(Standard Adj.* ***55****) must be changed accordingly.*

#15 **FREE GAME LIMIT:** Set between **1 – 9, UNLIMITED** *or* **NO FREE GAMES**. Factory Default = **5**. Set the maximum number of *Free Games* that may be accumulated per game.

#16 **EXTRA BALL LIMIT:** Set between **1 – 9, UNLIMITED** *or* **NO EXTRA BALLS**. Factory Default = 5. Set the number of *Extra Balls* that may be accumulated per game.

#17 **EXTRA BALL PERCENTAGE:** Set between **1% – 50%**. Factory Default = 25%. This adjustment allows the operator to adjust how frequently the ***Extra Ball Feature*** is made available to the player. *This adjustment is not shown if* ***NO EXTRA BALLS*** *is installed in* ***Extra Ball Limit*** *(Standard Adjustment* ***16****).*

#18 **GAME PRICING:** There are two (2) methods available for *Coin Switch Programming*: **Standard** & **Custom**. Set between **AUSTRALIA 1 – UK 6** *or* **CUSTOM**. Factory Default = **USA 10**. *Shortcut:* ***Set Custom Pricing*** *and instructions, review the Utilities Section,* ***Set Custom Pricing****.* The appropriate Dip Switch Setting (Dip Sw. 1-8 location CPU/Sound PCB SW1) in relationship to the Pricing Scheme selected is important *(view the tables on the following pages for more information).*

Standard Adjustment 18, Game Pricing, continued on the next page.

CPU/SOUND PCB DIP SWITCH SW1 SETTING	COUNTRY SETTING OPTION(S)	COIN MECHANISMS (SWITCHES) COINS THRU ... SLOT: LEFT / CENTER / RIGHT / 4TH	PRICING SCHEME — Number of Plays (Credits) for Price Amount Shown — See "Appendix J" for Coin Cards Examples & Info!	Requires SPI Coin Card(s) Part Number
Pos. 1 2 3 4 5 6 7 8 — ON / OFF ▼▼▼▼▼▼▼▼ (Default Highlighted)	USA 1	0.25 / 1.00 / 0.25 /	USD // UNITED STATES DOLLAR // [$]	
HIGHLIGHTED = Factory Default	USA 2		1/0.25	755-5400-01-Y
HIGHLIGHTED = Not Shown on Coin Card	USA 3		1/0.50 — 2/0.75 — 3/1.00	755-5400-09-Y
	USA 4		1/0.50 — For USA 6 and USA 7 use: 755-5400-02-Y	755-5400-02-Y
	USA 5		1/0.50 — USA 6 Note: If player uses X4 25¢ quarters = 2 plays. However, $1 bill = 3 plays!	755-5400-02-Y
	USA 6		1/0.50 | 2/1.00 — 3/1.50 — 5/2.00	755-5400-08-Y
	USA 7		1/0.50 — 2 / 4 X 25¢' — 3 / $ 1.00 Bill	◀ Used to promote the Bill Validator.
	USA 8		1/0.50 | 2/1.00 — 4/1.50 — 6/2.00	
	USA 9		1/0.50 — 3/1.00	755-5400-00-Y
	USA 10		1/1.00	755-5400-07-Y
	USA 11		1/0.75 — 2/1.50 — 3/2.00	755-5400-11-Y
			1/1.00 — 3/2.00	
Pos. 1 2 3 4 5 6 7 8 — ON / OFF (Default Highlighted)	AUSTRALIA 1	0.20 / 1.00 / 2.00 /	AUD // AUSTRALIAN DOLLARS // [$AUS]	
	AUSTRALIA 2		1/1.00 — 3/2.00	755-5406-00-Y (1 Side)
	AUSTRALIA 3		1/1.00	
	AUSTRALIA 4		1/2.00	
	AUSTRALIA 5		1/2.00 — 2/4.00 — 3/5.00	
	AUSTRALIA 6		1/3.00 — 2/5.00 — 3/8.00 — 5/10.00	
			1/2.00 — 2/3.00	
Pos. 1 2 3 4 5 6 7 8 — ON / OFF (Default Highlighted)	CANADA 1 [25¢ door]	0.25 / 0.25 / 1.00 / 2.00	CAD // CANADIAN DOLLARS // [$CAN]	
			1/0.50 — 2/0.75 — 3/1.00	755-5400-00-Y -01-Y or -02-Y
	CANADA 2 [dollar door]	1.00 / 2.00 /	1/1.00 — 3/2.00	755-5400-10-Y
Pos. 1 2 3 4 5 6 7 8 — ON / OFF (Default Highlighted)	CROATIA	1 / 2 / 5 /	HRK // CROATIAN KUNA // [kuna]	
			1/3 — 2/5	755-5410-00-Y (2-Sided)
Pos. 1 2 3 4 5 6 7 8 — ON / OFF (Default Highlighted)	DENMARK 1	1 / 5 / 10 / 20	DKK // DANISH KRONER // [Kr]	
	DENMARK 2		1/3 — 2/5	
			1/2 | 2/4 | 3/5 | 4/7 | 5/9 | 7/10	755-5402-00-Y (2-Sided)
Pos. 1 2 3 4 5 6 7 8 — ON / OFF (Default Highlighted)	JAPAN 1	100 / 100 /	JPY // JAPANESE YEN // [¥]	
	JAPAN 2		1/100	
			1/100 — 3/200	755-5408-01-Y (2-Sided)
Pos. 1 2 3 4 5 6 7 8 — ON / OFF (Default Highlighted)	LITHUANIA	1 / 2 / 5 /	LTL // LITHUANIA LITAI // [Lt]	
			1/2	755-5416-00-Y (1 Side)
Pos. 1 2 3 4 5 6 7 8 — ON / OFF (Default Highlighted)	MIDDLE EAST	token / token /	TOKEN // *Middle East currency used to buy token* // [TOKEN]	
			1/1	755-5416-00-Y (use Side 1)
Pos. 1 2 3 4 5 6 7 8 — ON / OFF (Default Highlighted)	NEW ZEALAND 1	1 / 2 /	NZD // NEW ZEALAND DOLLAR // [$NZD]	
	NEW ZEALAND 2		1/1	
			1/1 — 3/2	755-5406-00-Y (Side 2)
Pos. 1 2 3 4 5 6 7 8 — ON / OFF (Default Highlighted)	NORWAY 1	10 / 5 / 20 /	NOK // NORWEGIAN KRONE // [Kr]	
	NORWAY 2		1/10	
	NORWAY 3		1/10 — 3/20	755-5403-01-Y or -02-Y / (2-Sided)
	NORWAY 4		1/20	755-5403-03-Y
	NORWAY 5		1/20 — 3/40	(2-Sided)
	NORWAY 6		1/.10	
	NORWAY 7		1/.10 — 3/.20	
	NORWAY		1/.20	
			1/.20 — 3/.40	
Pos. 1 2 3 4 5 6 7 8 — ON / OFF (Default Highlighted)	RUSSIA	▼ LEFT SWITCH CAN BE WIRED TO BILL ACCEPTOR ▼ 10 / 5 / 1 /	RUB // RUSSIAN RUBLE // [Ruble]	
			1/5	755-5411-00-Y (2-Sided)
Pos. 1 2 3 4 5 6 7 8 — ON / OFF (Default Highlighted)	SO. AFRICA 1	0.50 / 1.00 / 2.00 / 5.00	ZAR // SOUTH AFRICAN RAND // [R]	
	SO. AFRICA 2		1/2.00 — 2/5.00	
			1/3.00	755-5409-01-Y (2-Sided)
Pos. 1 2 3 4 5 6 7 8 — ON / OFF (Default Highlighted)	SWEDEN 1	1 / 5 / 10 /	SEK // SWEDISH KRONOR // [kr]	
	SWEDEN 2		1/10 — 2/15 — 3/20	
			1/5	755-5404-00-Y (2-Sided)
Pos. 1 2 3 4 5 6 7 8 — ON / OFF (Default Highlighted)	SWITZERLAND 1	1 / 2 / 5 /	CHF // SWISS FRANCS // [Sf]	
	SWITZERLAND 2		1/1 | 2/2 | 3/3 | 4/4 | 6/5	
			1/1 | 3/2 | 5/3 | 7/4 | 9/5	755-5405-00-Y (2-Sided)
Pos. 1 2 3 4 5 6 7 8 — ON / OFF (Default Highlighted)	TAIWAN	10 / 10 /	TWD // TAIWANESE DOLLAR // [TWD]	
			1/10	755-5412-00-Y (use Side 1)
Pos. 1 2 3 4 5 6 7 8 — ON / OFF (Default Highlighted)	UK 1	▼ 5TH COIN SLOT NOT AVAILABLE WITH CUSTOM PRICING ▼	GPB // UNITED KINGDOM POUNDS // [£]	
	UK 2		3/1.00 — 7/2.00	755-5407-00-Y
ATTENTION: UK 5TH COIN SLOT TIED TO 6TH CHANNEL ON ELEC. COIN MECH	UK 3		4/1.00	755-5407-01-Y*
	UK 4		1/0.50 | 2/1.00 — 3/1.50 — 5/2.00	755-5407-01
	UK 5		1/0.30 | 2/0.60 — 3/0.90 — 4/1.00	755-5407-01-Y*
	UK 6		1/1.00 — 3/2.00	755-5407-01
			3/2.00 — *use blank side	755-5407-01-Y*

LEFT	CENTER	RIGHT	4TH	5TH
0.10	0.50	1.00	0.20	2£ ▲ Coin Only

Euro 1-12 Summary & International (Euro) Standard Pricing Select Table

CPU/SOUND PCB DIP SWITCH SW1 SETTING	COUNTRY SETTING OPTION(S)	COIN MECHANISMS (SWITCHES) COINS THRU ... SLOT: LEFT	CENTER	RIGHT	4TH	PRICING SCHEME Number of Plays (Credits) for Price Amount Shown See "Appendix J" for Coin Cards Examples & Info! EUR // EUROPEAN UNION EUROS // [€]			Requires SPI Coin Card(s) Part Number
Pos. 1 2 3 4 5 6 7 8 — Default Highlighted									
ON S E E B E L O W	Euro 1	0.50	1.00	2.00	optional 0.20 optional	1/0.50			755-5401-01-Y
OFF S E T T I N G S	Euro 2					1/0.50	2/1.00	3/1.50	5/2.00	755-5401-02-Y
Euro 1-12 are alternate settings for countries using the Euro.	Euro 3					1/0.50	3/1.00			755-5401-03-Y
	Euro 4					1/0.50	2/1.00	3/1.50	6/2.00	755-5401-04-Y
HIGHLIGHTED = Factory Default	Euro 5					1/0.50	3/1.00	4/1.50	7/2.00	755-5401-05-Y
	Euro 6					2/0.50				755-5401-06-Y
HIGHLIGHTED = Not Shown on Coin Card	Euro 7					1/1.00	2/2.00	3/3.00	5/4.00	755-5401-07-Y
	Euro 8					1/1.00		3/2.00		755-5401-08-Y
	Euro 9					1/1.00		2/1.50	3/2.00	755-5401-09-Y
	Euro 10					1/1.00		3/2.00	7/3.00	755-5401-10-Y
	Euro 11					1/1.00		4/2.00		755-5401-11-Y
	Euro 12					2/1.00	4/2.00	6/3.00	9/4.00	755-5401-12-Y

*For a different **Euro Pricing Scheme** (other than Factory Default listed below), scroll through **Standard Adjustment 18**: Euro 1-12 or CUSTOM* for new setting (reference above Euro 1-12 Summary). Keep the Country Dip Switch Setting the same as listed below.*

CPU/SOUND PCB DIP SWITCH SW1 SETTING	COUNTRY SETTING OPTION(S)	COIN MECHANISMS (SWITCHES) LEFT	CENTER	RIGHT	4TH	PRICING SCHEME EUR // EUROPEAN UNION EUROS // [€]			Requires SPI Coin Card(s) Part Number
Pos. 1 2 3 4 5 6 7 8 — Default Highlighted									
ON ▲ / OFF ▼▼▼▼▼▼▼	AUSTRIA Euro 9	0.50	1.00	2.00		1/1.00	2/1.50	3/2.00	755-5401-09-Y
ON ▲ / OFF ▼▼▼▼▼▼▼	BELGIUM Euro 1	0.50	1.00	2.00		1/0.50			755-5401-01-Y
ON ▲ ▲ / OFF ▼ ▼▼▼▼▼▼	FINLAND Euro 8	0.50	1.00	2.00		1/1.00	3/2.00		755-5401-08-Y
ON ▲ ▲ / OFF ▼ ▼▼▼▼▼▼	FRANCE Euro 10	0.50	1.00	2.00		1/1.00	3/2.00	7/3.00	755-5401-10-Y
ON ▲▲▲ / OFF ▼▼▼▼▼	GERMANY 1	0.50	1.00	2.00		1/0.50			755-5401-01-Y
	GERMANY 2					1/0.50	2/1.00	3/1.50	5/2.00	755-5401-02-Y
	GERMANY 3					1/0.50	2/1.00	3/1.50	6/2.00	755-5401-04-Y
ON ▲▲▲▲ / OFF ▼▼▼▼	GREECE Euro 8	0.50	1.00	2.00		1/1.00	3/2.00		755-5401-08-Y
ON ▲ / OFF ▼▼▼	ITALY 1	0.50		0.50		1/0.50			755-5401-01-Y
▼▼▼ ▼▼▼▼	ITALY 2					1/1.00	3/2.00		755-5401-08-Y
ON ▲ / OFF ▼▼ ▼▼▼▼▼	NETHERLANDS Euro 3	0.50	1.00	2.00		1/0.50	3/1.00		755-5401-03-Y
ON ▲ / OFF ▼▼▼▼▼▼▼	PORTUGAL Euro 1	0.50		0.50		1/0.50			755-5401-01-Y
ON ▲ / OFF ▼ ▼▼▼▼▼	SPAIN Euro 8	0.50	1.00	2.00		1/1.00	3/2.00		755-5401-08-Y

HIGHLIGHTED = *Factory Default* HIGHLIGHTED = *Not Shown on Coin Card*

For the associated **Coinage Card** required *if the Factory Default Setting was changed*, view on-line at:

http://www.sternpinball.com/coinagecards.shtml

You can download and print the replacement card. *Adobe® Reader 5.0 or higher required (links on site).* Use **Yellow Card Stock**: **ASTROBRIGHTS® SOLAR YELLOW #65 FROM WAUSAU PAPER PRODUCTS** (Stock #22731)

#19 **MATCH PERCENTAGE:** Set between **0% – 10%** *or* **OFF**. Factory Default = 9%. At 0% the *Match Animation Feature* occurs at the end of the game but never awards the **Match Award** *(Standard Adjustment 20)*. Set to **OFF**, no ***Match Animation Feature*** is shown.

#20 **MATCH AWARD:** Set to **CREDIT, TICKET*** *or* **TOKEN***. Factory Default = **CREDIT**. *This adjustment is not shown if **OFF** is installed in **Match Percentage** (Standard Adjustment 19).*

Note:* If **TICKET or **TOKEN** is selected, the game will require an optional Ticket or Token Dispenser and then **Q24 Option** (Standard Adj. 55) must be changed accordingly.*

#21 **BALLS PER GAME:** Set between **1 – 10**. Factory Default = **3**. Set the number of balls per game.

Standard Adjustments 22-36 continued on the next page.Standard Adjustments continued.

#22 **TILT WARNINGS:** Set between **0 – 3**. Factory Default = **2**. Set the number of Plumb Bob Tilt Switch closures before the ball in play is tilted. *Each closure generates an audible alert and/or display alert.*

#23 **CREDIT LIMIT:** Set between **4 – 50**. Factory Default = **30**. Set the maximum credits allowed.

#24 **ALLOW HIGH SCORES:** Set to **YES** *or* **NO**. Factory Default = **YES**. When set to **YES**, if a player exceeds the Default Grand Champion *or* 1-4 High Scores, the player may receive a **High Score Award** *(Standard Adjustment **25**)* and enter their **3 Initials** *or* **10-Letter Name** *(Standard Adjustment **36**)*. Set to **NO** to disable this feature. *The following Standard Adjustments 25-37 are not shown if **NO** is installed.*

#25 **HIGH SCORE AWARD:** Set to **CREDIT**, **TICKET*** or **TOKEN***. Factory Default = **CREDIT**. Set the type of award to be given to the player when the appropriate **Grand Champion Score** *or* **High Score #1 – #4** threshold *or* level is acheived. If awarding a ***CREDIT***, ***TICKET*** *or* ***TOKEN*** is prohibited in your area, install **NO** in **Allow High Scores** (Standard Adjustment **24**). *This adjustment is not shown if **NO** is installed in **Allow High Scores** (Standard Adjustment **24**).*

Note:* *If **TICKET or **TOKEN** is selected, the game will require an optional Ticket or Token Dispenser and then **Q24 Option** (Standard Adj. **55**) must be changed accordingly.*

#26 **GRAND CHAMPION AWARDS:** Set between **0 – 5**. Factory Default = **1**. Set the number of **High Score Award**(s) *(Std. Adj. **25**)*, awarded for exceeding the Grand Champion Score *(Standard Adjustment **31**). This adjustment is not shown if **NO** is installed in **Allow High Scores** (Standard Adjustment **24**).*

#27 **HIGH SCORE #1 AWARDS:** Set between **0 – 3**. Factory Default = **1**. Set the number of **High Score Award**(s) *(Std. Adj. **25**)*, awarded for exceeding the High Score #1 *(Standard Adjustment **32**). This adjustment is not shown if **NO** is installed in **Allow High Scores** (Standard Adjustment **24**).*

#28 **HIGH SCORE #2 AWARDS:** Set between **0 – 2**. Factory Default = **0**. Set the number of **High Score Award**(s) *(Std. Adj. **25**)*, awarded for exceeding the High Score #2 *(Standard Adjustment **33**). This adjustment is not shown if **NO** is installed in **Allow High Scores** (Standard Adjustment **24**).*

#29 **HIGH SCORE #3 AWARDS:** Set between **0 – 1**. Factory Default = **0**. Set the number of **High Score Award**(s) *(Std. Adj. **25**)*, awarded for exceeding the High Score #3 *(Standard Adjustment **34**). This adjustment is not shown if **NO** is installed in **Allow High Scores** (Standard Adjustment **24**).*

#30 **HIGH SCORE #4 AWARDS:** Set between **0 – 1**. Factory Default = **0**. Set the number of **High Score Award**(s) *(Std. Adj. **25**)*, awarded for exceeding the High Score #4 *(Standard Adjustment **35**). This adjustment is not shown if **NO** is installed in **Allow High Scores** (Standard Adjustment **24**).*

#31 **GRAND CHAMPION SCORE:** Set between **1,000,000 – 1,000,000,000** *(increments of 1,000,000)*. Factory Default = __,000,000. Set the desired **Grand Champion Score** level a player needs to exceed to earn the **High Score Award** *(Standard Adjustment **25**)*. A score higher than the default, cannot be reset by Standard Adjustment **37**, **HSTD Reset Count**. *The Grand Champion Score will revert to the Factory Default Score **ONLY** if a **Reset Grand Champion** is performed in the **RESET MENU** (via the **UTILITIES MENU**) or if the game is without power for more than 12 hours after the CPU/Sound PCB Coin Cell Battery is expired or removed. This adjustment is not shown if **NO** is installed in **Allow High Scores** (Standard Adjustment **24**).*

#32 **HIGH SCORE #1:** Set between **1,000,000 – 1,000,000,000.** Factory Default = __,000,000. Set the desired **High Score #1** level a player needs to exceed to earn the **High Score Award** *(Standard Adjustment **25**)*. A score higher than the default, will be reset by Standard Adjustment **37**, **HSTD Reset Count**. *The High Score will revert to the Factory Default Score **ONLY** if a **Reset High Scores** is performed in the **RESET MENU** (via the **UTILITIES MENU**) or if the game is without power for more than 12 hours after the CPU/Sound PCB Coin Cell Battery is expired or removed. This adjustment is not shown if **NO** is installed in **Allow High Scores** (Standard Adjustment **24**).*

#33 **HIGH SCORE #2:** Set between **1,000,000 – 1,000,000,000.** Factory Default = __,000,000. Set the desired **High Score #2** level a player needs to exceed ... *(continued in Standard Adjustment **32** definition above).*

#34 **HIGH SCORE #3:** Set between **1,000,000 – 1,000,000,000.** Factory Default = __,000,000. Set the desired **High Score #3** level a player needs to exceed ... *(continued in Standard Adjustment **32** definition above).*

#35 **HIGH SCORE #4:** Set between **1,000,000 – 1,000,000,000.** Factory Default = __,000,000. Set the desired **High Score #4** level a player needs to exceed ... *(continued in Standard Adjustment **32** definition above).*

#36 **HSTD (HIGH SCORE TO DATE) INITIALS:** Set to **3 INITIALS** *or* **10 LETTER NAME**. Factory Default = **3 INITIALS**. When set to **3 INITIALS**, the player is allowed only 3 initials to input. When set to **10 LETTER NAME**, the player is allowed to enter 10 initials to input. *This adjustment is not shown if **NO** is installed in **Allow High Scores** (Standard Adjustment **24**).*

Standard Adjustments 37-50 continued on the next page.

#37 **HSTD (HIGH SCORE TO DATE) RESET COUNT:** Set between **100 – 9900** *or* **OFF** *(increments of 100).* Factory Default = **2000.** Set the number of games between "automatic resets" of High Scores back to the Factory Defaults for ***ONLY*** Standard Adj. **32 – 35, High Score #1 – #4**. *The High Score will revert to the Factory Default Scores when the number of games stated is reached.* ***Reset High Scores*** *can be performed in the* ***RESET MENU*** *(via the* ***UTILITIES MENU****) anytime or if the game is without power for more than 12 hours after the CPU/Sound PCB Coin Cell Battery is expired or removed. This adjustment is not shown if* ***NO*** *is installed in* ***Allow High Scores*** *(Standard Adj.* ***24****).*

#38 **FREE PLAY:** Set to **YES** or **NO**. Factory Default = **NO**. When set to **YES**, no coins are required for *Game Play.*

#39 **LANGUAGE:** Set to **ENGLISH**, **GERMAN**, **FRENCH**, **SPANISH** *or* **ITALIAN**. Factory Default = **ENGLISH**. Set the language for the game. Language of game is also shown in the Dot Display *(along with the Game Title and code version)* at the start-up routine which follows a game reset *or* power-up.

#40 **PLAYER LANGUAGE SELECT:** Set to **YES** *or* **NO**. Factory Default = **YES**. When set to **YES**, after the player presses the **Start Button** *(to start a game with adequate credit)*, the player has the option to choose a language by pressing either **Flipper Button** before game start *(options of languages installed are shown on the Dot Display).* ***Note:*** *If set to* ***NO*** *or if only one langauge is installed and the setting is set to* ***YES****, the game will start immediately after the* ***Start Button*** *press. Language(s) available are dependent on game destination from the factory. Other languages may be available on-line for download and installed on your game. With the proper dip switch installed, the langauge option(s) can be changed. For more information or help, call Technical Support at 800-542-5377 (708-345-7700).*

#41 **CUSTOM MESSAGE:** Set to **ON**, **CHANGE** *or* **OFF**. Factory Default = **ON**. *Shortcut:* ***Enter Custom Message*** *and instructions, review the Utilities Section,* ***Enter Custom Message****.*

#42 **FLASH LAMP POWER:** Set to **NORMAL**, **OFF** *or* **DIM**. Factory Default = **NORMAL**. When set to **DIM**, the Flash Lamps impulse power is reduced by **25%** and when set to **OFF** the Flash Lamps will not flash. For Flash Lamps used in this game, **Go To Flash Lamps Menu** via the **DIAGNOSTICS MENU** *(see the Diagnostics Section).*

#43 **COIL PULSE POWER:** Set to **NORMAL**, **HARD** *or* **SOFT**. Factory Default = **NORMAL**. When set to **HARD**, the coil pulse power is ***increased*** by **12.5%** of the normal pulse rate. When set to **SOFT** the coil pulse power is ***decreased*** by **12.5%** of the normal pulse rate. This adjustment is provided to compensate for *Low Line* or *High Line voltage* conditions where the solenoids (coils) appear to *kicking too weak or too hard.* Adjust as required.

#44 **KNOCKER VOLUME:** Set to **NORMAL**, **OFF** *or* **LOW**. Factory Default = **NORMAL**. When set to **LOW**, the volume is decreased 50%. When set to **OFF**, no sound is heard when the "knocker" is sounded. Test the knocker sound in the **Fire Knocker** Test via the **DIAGNOSTICS MENU** *(see Section* ***3****, Chapter* ***2****,* ***GO TO DIAGNOSTICS MENU****, Page* ***19****).*

#45 **GAME RESTART:** Set to **YES** *or* **NO**. Factory Default = **YES**. When set to **YES**, a new game may be started during any ball after the first ball is completed *(if credits allow).* Pressing the Start Button during the first ball will add additional players *(up to 4, if credits allow).* When set to **NO**, the game disables the Start Button after the first ball until the final ball is in play.

#46 **BILL VALIDATOR:** Set to **YES** *or* **NO**. Factory Default = **NO**. When set to **YES**, in ***Game Attract Mode*** an "Insert Bill Animation" is shown in the display *(or just the absense of the Coin Animation).* When set to **NO**, an "Insert Coin Animation" is shown. ***(This adjustment will appear when implemented).***

#47 **MUSIC VOLUME:** Set between **1 – 15**. Factory Default = **1**. After volume is set via Service Buttons this adjustment can be utilized to adjust the background music *(1 all the way on, 15 all the way off)* while keeping the Special Sound Effects at the same level.

#48 **BALL SAVE TIME:** Set between **0:01 – 0:15**, **AUTO** *or* **NO BALL SAVES**. Factory Default = **0:05**. When set to **NO BALL SAVES** this feature is unavailable. Set between **0:01** through **0:15** *(single increments)* for the ball to be sent back into play if the time set is not met *(per ball).* Set to **AUTO** to automatically adjust the Ball Save Timer based on the average ball time.

#49 **TIMED PLUNGER:** Set to **OFF** *or* **0:01 – 1:00**. Factory Default = **OFF**. The plunger will "Autoplunge" the ball *(at the time set)* when the ball is at the beginning of play, waiting for the player.

#50 **FLIPPER BALL LAUNCH:** Set to **OFF**, **LEFT FLIPPER**, **RIGHT FLIPPER**, **EITHER FLIPPER** *or* **BOTH FLIPPERS**. Default is **OFF**. This feature allows the player to operate the Auto Ball Launch with the Flipper Button(s) depending on which setting is chosen.

Standard Adjustments 51-63 continued on the next page.

#51 **COINDOOR BALL SAVER:** Set to **YES** *or* **NO**. Factory Default = **NO**. When set to **NO**, this feature is not available. When set to **YES**, this feature allows the Coin Door to be opened during game play; the ball will drain but the game will be placed "on hold". When the Coin Door is closed, the pinball will return to the Shooter Lane, and the game will resume. *Useful at locations where technicians change the cash box regularly at exact times of the day where players can be on the game.*

#52 **COMPETITION MODE:** Set to **YES** *or* **NO**. Factory Default = **NO**. When set to **NO**, this feature is not available. Set to **YES**, this feature will equalize random game features and global score values during multi-player games by predetermined competition rules set by programming. If an **Install Competition** was made via the **INSTALLS MENU** *(which automatically changes this setting to **YES**)*, and this setting was changed back to **NO**, the ***Competition Mode*** will be turned **OFF** *(cancelled)*.

#53 **CONSOLATION BALL:** Set to **YES** *or* **NO**. Factory Default = **YES**. When set to **YES**, the ***EXTRA BALL*** *(lamp insert, location varies)* will be lit on the last ball in play, if certain programming criteria is met.

#54 **FAST BOOT:** Set to **YES** *or* **NO**. Factory Default = **YES**. When set to **NO** or if you hold both **Flipper Buttons** during Power-Up, this feature is not available and will display all normal Power-Up screens. When set to **YES**, the game will not display the normal informative Power-Up screens, specifically the CPU Version screen and the Location/Game ID screen. Regardless of the setting, normal Power-Up safety checks are still performed. ***(This adjustment will appear when implemented).***

#55 **Q24 OPTION:** Set to **COIN METER**, **TOKEN DISPENSER** *or* **KNOCKER**. Factory Default = **COIN METER**. This Coil (Solenoid) Location is left "open" at the Factory to allow for these optional Mechanisms to be added to the game. If selecting **TOKEN DISPENSER**, Standard Adjustments 3, 14, 20 & 25 should be changed to **TOKEN**. *Call Tech. Support at 1-800-542-5377 if more information is required on this option.*

#56 **TICKET DISPENSER:** Set to **YES** *or* **NO**. Factory Default = **NO**. *This adjustment is required only for games which have an optional Deltronics (DL-1275-2 PCB Style, SPI Part Nr. 515-7275-00) Ticket Dispenser installed. Unique CPU Sound Bd. Dip Switch Setting required, changes the Default to **YES**.*

#57 **PLAYER COMPETITION:** Set to **YES** *or* **NO**. Factory Default = **YES**. ***Competition Mode*** unrandomizes feature events, and standardizes game play and rule sets *(varies from game to game)* for fair competitions. With at least one credit posted, *or* with the game set for 'FREE PLAY', during the game-over Attract Mode, press the **Left Flipper Button** and hold it in for approximately one second. The following message will appear on the display for approximately 10 seconds: '**COMPETITION MODE READY ... PRESS START NOW**'. If a game is started *(either by pressing the 'START' button for a regular game, or by pressing the 'TOURNAMENT START' button for a tournament game)* while this message appears on the display, then competition mode will be enabled for all players during the game. General rules are covered in the Instruction Card. Other *Hints and/or Rules* can be made known on this game either visually *(the Dot Display or Flashing Light Inserts) or* can be audible.

#58 **TEAM SCORES:** Set to **YES** *or* **NO**. Factory Default = **NO**. Set to **YES**, then Team Play will be made available. ***Team Play only works in a 4-Player Game.*** The totals for Players 1 / 3 (Team 1) & Players 2 / 4 (Team 2) are then displayed individually ***as well as*** the combined score for **BOTH TEAMS** to enable **Team Play (Doubles)**. ***(This adjustment will appear when implemented).***

#59 **LOCATION ID:** Set between **0** to **9999**. Factory Default = **0**. This adjustment allows the operator to assign a location identification number to the audit print-out sheet. *(Will not be affected by a Factory Reset.)*

#60 **GAME ID:** Set between **0** to **9999**. Factory Default = **0**. This adjustment allows the operator to assign a game identification number to the audit print-out sheet. *(Will not be affected by a Factory Reset.)*

#61 **TIME FORMAT:** Set to **12-HOUR** *or* **24-HOUR**. Factory Default = **12-HOUR**. This adjustments determines how the time is displayed. *Time used for Tournament and Data Dumps where a time stamp is required.*

#62 **COIN INPUT DELAY:** Set between **30** to **60** *or* **OFF**. Factory Default = **30**. This adjustment creates a short time delay between the moment the coin is inserted into the **Coin Slot** to the moment the CPU/Sound PCB registers the coin *(30 = approxiamately 1/2 second)*.

#63 **LOST BALL RECOVERY:** Set to **YES** *or* **NO**. Factory Default = **NO**. Set to **YES**, at the start of the 5th consecutive ball search *(with no scoring between searches)*, the game will consider any balls in play to be permanently lost and will attempt to recover from this situation by serving a new ball into play from the ball trough. Set to **NO** *(to suppress this adjustment behavior)* for the game to perform the "ball search" indefinitely until the lost balls are found or replaced.

STANDARD ADJUSTMENTS [#1 – #63] ▼

Nr.	STANDARD ADJUSTMENT NAME	USA DEFAULT	YOUR SETTING
1	REPLAY TYPE	AUTO	
2	‡ REPLAY PERCENTAGE	10%	
3	‡ REPLAY AWARD	CREDIT	
4	‡ REPLAY LEVELS	1	
5	‡ AUTO REPLAY START	,000,000	
6	‡ DYNAMIC REPLAY START	,000,000	
7	‡ REPLAY LEVEL #1	,000,000	
8	‡ REPLAY LEVEL #2	,000,000	
9	‡ REPLAY LEVEL #3	,000,000	
10	‡ REPLAY LEVEL #4	,000,000	
11	‡ REPLAY BOOST	YES	
12	SPECIAL LIMIT	1	
13	‡ SPECIAL PERCENTAGE	10%	
14	SPECIAL AWARD	CREDIT	
15	FREE GAME LIMIT	5	
16	EXTRA BALL LIMIT	5	
17	‡ EXTRA BALL PERCENTAGE	25%	
18	GAME PRICING	USA 10	
19	MATCH PERCENTAGE	9%	
20	MATCH AWARD	CREDIT	
21	BALLS PER GAME	3	
22	TILT WARNINGS	2	
23	CREDIT LIMIT	30	
24	ALLOW HIGH SCORES	YES	
25	HIGH SCORE AWARD	CREDIT	
26	GRAND CHAMPION AWARDS	1	
27	HIGH SCORE #1 AWARDS	1	
28	HIGH SCORE #2 AWARDS	0	
29	HIGH SCORE #3 AWARDS	0	
30	HIGH SCORE #4 AWARDS	0	
31	GRAND CHAMPION SCORE	,000,000	

Nr.	STANDARD ADJUSTMENT NAME	USA DEFAULT	YOUR SETTING
32	HIGH SCORE #1	,000,000	
33	HIGH SCORE #2	,000,000	
34	HIGH SCORE #3	,000,000	
35	HIGH SCORE #4	,000,000	
36	HSTD INITIALS	3 INITIALS	
37	HSTD RESET COUNT	2000	
38	FREE PLAY	NO	
39	LANGUAGE	ENGLISH	
40	PLAYER LANGUAGE SELECT	YES	
41	CUSTOM MESSAGE	ON	
42	FLASH LAMP POWER	NORMAL	
43	COIL PULSE POWER	NORMAL	
44	KNOCKER VOLUME	NORMAL	
45	GAME RESTART	YES	
46	BILL VALIDATOR	NO	
47	MUSIC VOLUME	1	
48	BALL SAVE TIME	0:05	
49	TIMED PLUNGER	OFF	
50	FLIPPER BALL LAUNCH	OFF	
51	COINDOOR BALL SAVER	NO	
52	COMPETITION MODE	NO	
53	CONSOLATION BALL	YES	
54	FAST BOOT	YES	
55	Q24 OPTION	COIN METER	
56	TICKET DISPENSER	NO	
57	PLAYER COMPETITION	YES	
58	TEAM SCORES	NO	
59	LOCATION ID	0	
60	GAME ID	0	
61	TIME FORMAT	12-HOUR	
62	COIN INPUT DELAY	30	
63	LOST BALL RECOVERY	YES	

Factory Defaults Settings are subject to change during production *(especially Standard Adjustments 2, 4, 5, 13, 16-17, 19, 31-35 & 47).*
‡ Not all Standard Adjustments are shown. Depending on the setting (whether Factory Default or if changed by the operator), associated adjustments do not appear, if not required. ***Note:*** *If* ***Game Dip Switch*** *other than USA is installed, different Defaults will appear.*

Feature Adjustments [#1 – #+]

GAME

To initiate, from the **ADJUSTMENTS MENU**, select the "GAME" *Icon.* The Dot Matrix Display will indicate the *adjustment number (in this group), adjust. name, adjust. setting* and *comment line.* The current adjustment will remain on the display until the next adjustment is viewed or when this sub-menu is exited.

>>> **FACTORY RESET** *or* **CODE UPDATE NOTE:** Don't forget, any changes you make to your adjustments will revert back to the Factory Default settings if you perform a Factory Reset or update your Game Code. *See Utilities Section (**GO TO RESETS MENU** and **GO TO USB MENU**).*

View the Coils Detailed Chart Menu to see if this game is Shaker Motor Enabled. *If it is, set the options in the Feature Adjustment as seen below. (typically the last one).*

\# **SHAKER MOTOR (OPTIONAL) :** Set to **NONE**, **MINIMAL USE**, **MODERATE USE** *or* **MAXIMAL USE.** Factory Default = **MODERATE USE.** *Set to any of the varying "**... USES**" if an Optional Shaker Motor Kit (SPI Part Number **502-5027-00**) was installed correctly in this pinball machine. See the assembly (kit) on the last page of Blue Pages (Major Assemblies). Also see Shaker Motor Coil (Q8) in the Coils Detailed Chart Table at the begining of this Service Game Manual or the beginning of the Yellow Pages.*

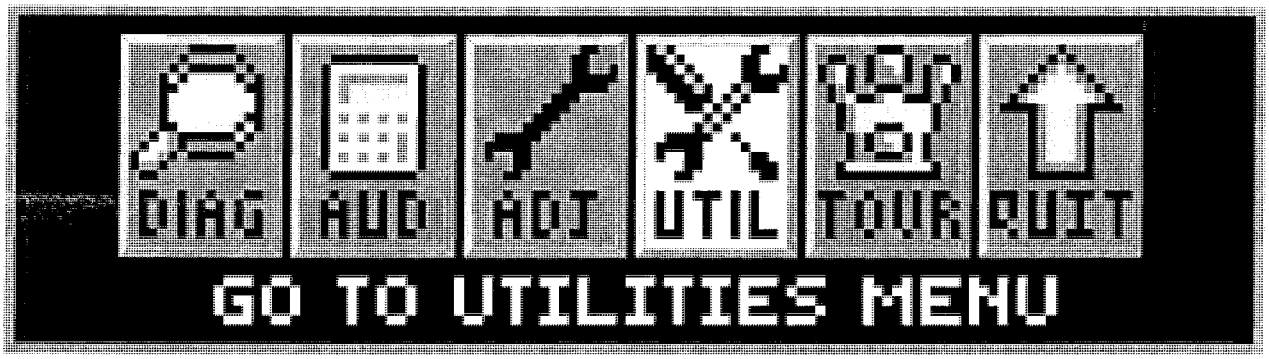

To initiate, from the **MAIN MENU**, select the "UTIL" *Icon*. The **UTILITIES MENU** provides ways to quickly and easily customize your game with **Installs** *(pre-sets for game Standard & Feature Adjustments)*, set-up a **Custom Message** *(short-cut to Standard Adjustment **41, Custom Message**)*, set-up **Custom Pricing** *(short-cut to Standard Adjustment **18, to the Custom Pricing Sub-Menu**)*, set-up the **Date and Time** *(required if the date and time is needed to be accurate for data dumps and for tournaments)*, reset certain particular game data *or* perform a complete **Factory Reset** and to download game data, update or backup game code in the **USB MENU**.

All **UTILITIES, INSTALLS, RESETS MENU** and **USB MENU** *Icons* and there usages are explained throughout this chapter in the same order as seen in the Dot Matrix Display. ***NOTE:*** Depending on Game Type, Version, selections made, Dip Switch settings, location and/or areas, some *Icons* may appear non-functional *or* may not appear at all. ***Installs (Adjustments), Icons** and/or **functions, order** and **operation are subject to change. If in doubt use the Factory Default Settings** (review **Install Factory** on the next page).*

In displays where changes can be made *or* to perform a function, use the **GREEN Button** to go **[BACK]**, exit *or* escape, the **RED Buttons** to [< / –] MOVE BACK / LEFT / [+ / >] MOVE FORWARD / RIGHT to view the next audit in the group, and the **BLACK Button** to **[SELECT]** the sub-menus.

Go To Installs Menu

To initiate, from the **UTILITIES MENU**, select the "INST" *Icon*. The **INSTALLS MENU** provides 13 **Installs** to vary **Game Play Difficulty** *(set with Feature Adjustments) or* **Game Play Type** and **Install Factory** *(restores all adjustments to Factory Defaults).*

For **detailed customization** *or* to check current **Adjustments Defaults** *(either changed by YOU in the Adjustments Menu or by this* **INSTALLS MENU** *or for Factory Default Settings), see Section **3**, Chapter **4, GO TO ADJUSTMENTS MENU**.* After completing one or more of the **Installs** in this chapter, go back to the **ADJUSTMENTS MENU** to see which **Standard** *and/or* **Feature Adjustments** have changed *(Feature Adjustments and/or settings are subject to change during production, and may differ than what is described in the tables at the end of this chapter). The Dot Display will indicate if a setting is a Factory Default or not. If the settings are not to your liking, perform **one** of the following:*

1.: **Manually** change the **Standard & Feature Adjustments** Settings *(perform this task in the **ADJUSTMENTS MENU**, see the Adjustments Section).*

2.: **Install Factory** *(see the last install)* on how to reset all of the **Standard & Feature Adjustments** back to the *Factory Default Settings.*

Multiple **Installs can be set** to vary game play; however, for **Installs** that have *one or more* Adjustments in common, the ***last*** "Install" selected & *activated*, will **supersede** any previously changed Adjustment(s) from any prior **Installs**. Any adjustments which you changed and are not affected by the Install will remain as set.

For example, if you want a **5-BALL Game** *set to* **EXTRA EASY**: Select and *activate* the "5BAL" *Icon* first (which will typically change any ***Feature*** Difficulty Adjustments to **HARD**), then select & *activate* the "X.EZ" *Icon* to **change back** the Difficulty Adjustments to **EXTRA EASY**. However, if the "X.EZ" *Icon* was selected & *activated* first, then the "5BAL" *Icon* was selected & *activated*, the game will be set to a **5-BALL Game** *set to* **HARD**.

Remember, use the **GREEN Button** to go **[BACK]**, exit *or* escape and the **BLACK Button** to **[SELECT]** to INSTALL your new setting(s).

Install Extra Easy

To initiate, from the **INSTALLS MENU**, select the "X.EZ" *Icon*. The Dot Matrix Display will indicate the **INSTALL EXTRA EASY**. Follow the on-screen prompts to perform the **Install**. Set the **Game Play Difficulty** level.

Installs Menu continued on the next page.

Installs Menu continued from previous page.

Install Easy

To initiate, from the **INSTALLS MENU**, select the "EASY" *Icon.* The Dot Matrix Display will indicate the **INSTALL EASY**. Follow the on-screen prompts to perform the **Install**. Set the **Game Play Difficulty** level.

Install Medium (Normal or Factory Settings)

To initiate, from the **INSTALLS MENU**, select the "FACT" *Icon.* The Dot Matrix Display will indicate the **INSTALL MEDIUM**. Follow the on-screen prompts to perform the **Install**. Set the **Game Play Difficulty** level.

Install Hard

To initiate, from the **INSTALLS MENU**, select the "HARD" *Icon.* The Dot Matrix Display will indicate the **INSTALL HARD**. Follow the on-screen prompts to perform the **Install**. Set the **Game Play Difficulty** level.

Install Extra Hard

To initiate, from the **INSTALLS MENU**, select the "X.HD" *Icon.* The Dot Matrix Display will indicate the **INSTALL EXTRA HARD**. Follow the on-screen prompts to perform the **Install**. Set the **Game Play Difficulty** level.

Install 3-Ball or 5-Ball

To initiate, from the **INSTALLS MENU**, select either the "3BAL" or "5BAL" *Icons.* The Dot Matrix Display will indicate the **INSTALL 3-BALL** or **5-BALL** depending on choice. Follow the on-screen prompts to perform the **Install**. Set the **Game Play Type** to 3 Balls per game *(Factory Default is 3 Balls per game, not including extra balls earned by the player, if any).*

Install Competition

To initiate, from the **INSTALLS MENU**, select the "COMP" *Icon.* The Dot Matrix Display will indicate the **INSTALL COMPETITION**. Follow the on-screen prompts to perform the **Install**. Set the **Game Play Type** to "Tournament" Rules. *Programming varies and is subject to change.*

Install Director's Cut

To initiate, from the **INSTALLS MENU**, select the "DCUT" *Icon.* The Dot Matrix Display will indicate the **INSTALL DIRECTOR'S CUT**. Follow the on-screen prompts to perform the **Install**. Set the **Game Play Type** to programmer's choice. *Programming varies and is subject to change.*

Install Home Play

To initiate, from the **INSTALLS MENU**, select the "HOME" *Icon.* The Dot Matrix Display will indicate the **INSTALL HOME PLAY**. Follow the on-screen prompts to perform the **Install**. Set the **Game Play Type** to "Home" Rules. *Programming varies and is subject to change.*

Install Novelty

To initiate, from the **INSTALLS MENU**, select the "NOV" *Icon.* The Dot Matrix Display will indicate the **INSTALL NOVELTY**. Follow the on-screen prompts to perform the **Install**. ********** This setting is recommended where local laws restrict certain game features. ********** Set the **Game Play Type** to "Restricted" Rules. *Programming varies and is subject to change.*

Install Add-A-Ball

To initiate, from the **INSTALLS MENU**, select the "A.A.B." *Icon.* The Dot Matrix Display will indicate the **INSTALL ADD-A-BALL**. Follow the on-screen prompts to perform the **Install**. ********** This setting is recommended where local laws restrict certain game features. ********** Set the **Game Play Type** to "Restricted" Rules. *Programming varies and is subject to change.*

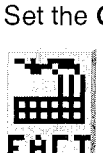

Install Factory

To initiate, from the **INSTALLS MENU**, select the "FACT" *Icon.* The Dot Matrix Display will indicate the **INSTALL FACTORY**. Follow the on-screen prompts to perform the **Install**. ⚠**CAUTION!** All **Standard** *and* **Feature Adjustments** which were changed in the **INSTALLS MENU** *or* **ADJUSTMENTS MENU** are returned to the **Factory Defaults** *(as indicated in the Dot Display in the **ADJUSTMENTS MENU**). Note: To perform a complete **Factory Reset, GO TO THE RESETS MENU**. Escape back to the **UTILITIES MENU**, select the "RESET" Icon, then select the "FACT" Icon in the **RESETS MENU** (review the end of this section, **Reset Factory Settings**).*

Enter Custom Message

To initiate, from the **UTILITIES MENU**, select the "ABCD CUST MSG" *Icon.* The **SET CUSTOM MESSAGE** *(a short-cut for Standard Adjustment 41, **Custom Message**)* provides an opportunity to have a text message appear in the the **Attract Mode**. Follow the on-screen prompts to complete [END].

Remember, use the **GREEN Button** to go **[BACK]**, exit *or* escape, the **RED Buttons** to [< / –] MOVE LEFT / CHOOSE NEXT [+ / >] MOVE RIGHT / CHOOSE PREVIOUS, and the **BLACK Button** to **[SELECT]** *as 'OK'.*

Set Custom Pricing

To initiate, from the **UTILITIES MENU**, select the "PRIC" *Icon.* The **CUSTOM PRICING MENU** *(a short-cut for Standard Adjustment 18, **Game Pricing**, and setting selected is **CUSTOM**)* provides an opportunity to set **Custom Pricing**.

Note ! ***MONETARY AMOUNT MUST BE SELECTED FIRST!*** Press [BACK] to – DECREASE *or* **[SELECT]** to + INCREASE the **[< $ >] monetary amount** *(e.g. look at the right side of the display from **$0.25** to **$0.50**).* Press [< / –] to – DECREASE *or* [+ / >] to + INCREASE the **credit quantity** *(e.g. look at the left side of the display from **0 CREDITS AT:** to **1 CREDIT AT:**).*

REMINDER
In these menus:

Press [BACK] to – DECREASE [< $]

Press [**SELECT**] to + INCREASE [$ >]

IF EXAMPLE CUSTOM PRICING SETTING DESIRED IS :
1 Play for **$0.50**, **3** Plays for **$1.00** and **7** Plays for **$2.00**
THEN YOU WILL NEED TO PERFORM THE FOLLOWING :

Step 1 The starting display appears as below if no prior **Custom Pricing** was installed.

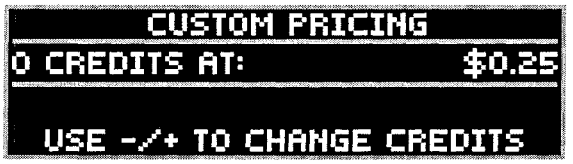

Step 2 Press [**SELECT**] to + INCREASE to **$0.50.** Press [+ / >] to + INCREASE to **1 CREDIT AT:**

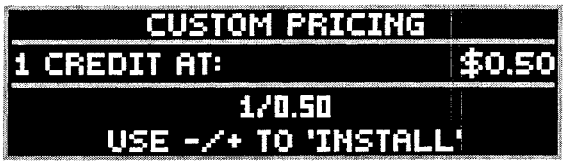

Step 3 Press [**SELECT**] to + INCREASE to **$1.00.** Press [+ / >] to + INCREASE to **2 CREDITS AT:**

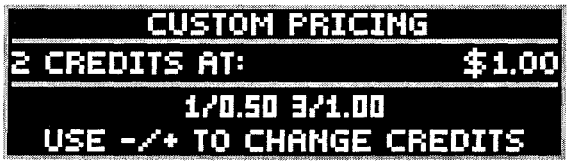

Step 4 Press [**SELECT**] to + INCREASE to **$2.00.** Press [+ / >] to + INCREASE to **4 CREDITS AT:**

Step 5 Press [**SELECT**] to + INCREASE the amount once *(example = $2.25).*

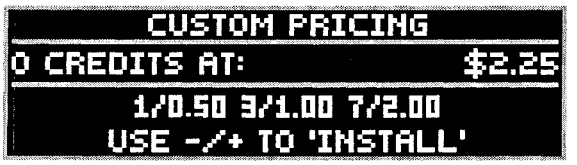

Press [< / –] once *or* press [+ / >] *eleven times until INSTALL appears.*

Step 6 Press [**SELECT**] to INSTALL. Press [< / –] / [+ / >] *or* [BACK] to edit.

Step 7 Press [**SELECT**], press [BACK] twice to exit the **SERVICE MENU** with your **Custom Pricing** installed.

To correct or make new changes, reenter, which brings you to **Step 6.** Press [BACK] repeatedly until the monetary amount shown is the desired amount and then continue following the above steps with your new or corrected settings. *If you are still having difficulty or if you have any questions, please call Technical Support 800-542-5377 or 708-345-7700, option 1.*

Set Date / Time

To initiate, from the **UTILITIES MENU**, select the "TIME" *Icon.* The **SET TIME MENU** appears with the **MONTH** flashing. Setting the date and time is required for 'Data Dumps' and Tournament Start and End Dates. If the setting of Standard Adjustment 61, **Time Format**, is set to **12-HOUR** *(Factory Default)* the time will be expressed in the **AM / PM format**. If Standard Adjustment 61, **Time Format**, is set to **24-HOUR** the time will be expressed in the **24-hour format**.

Go To Resets Menu

To initiate, from the **UTILITIES MENU**, select the "RESET" *Icon.* The **RESETS MENU** provides six (6) functions to reset *only the* **Coin Audits**, reset *only the* **Game Audits**, reset *only the* **Grand Champion Score**, reset *only the* **High Score(s)**, reset *only the* paid **Credits** *(includes Service Credits) or* to reset ***ALL DATA*** back to the **Factory Default Settings**.

Reset Coin Audits

To initiate, from the **RESET MENU**, select the "COIN" *Icon.* ⚠ **ONLY** the **Coin Audits** [Earnings Audits 5–12], will be reset to zero (0), *Factory Default Settings.* Follow the on-screen prompts to perform the **Reset**.

Reset Game Audits

To initiate, from the **RESET MENU**, select the "AUD" *Icon.* ⚠ **ONLY** the **Game Audits** [Earnings Audits **1–4**, Standard Audits **1–59** and Feature Audits **1–XX***], will be reset to zero (0), *Factory Default Settings.* Follow the on-screen prompts to perform the **Reset**. **varies per game title.*

Reset Grand Champion (Score)

To initiate, from the **RESET MENU**, select the "GC" *Icon* ⚠ **ONLY** the **Grand Champion Score** [adjustable via Standard Adjustment **31**], will be reset to *Factory Default Setting.* Follow the on-screen prompts to perform the **Reset**.

Reset High Scores

To initiate, from the **RESET MENU**, select the "HSTD" *Icon.* ⚠ **ONLY** the **High Score(s)** [adjustable via Standard Adjustments **32–35**], will be reset to *Factory Default Setting(s).* Follow the on-screen prompts to perform the **Reset**. ***Note:*** *High Scores (but not Grand Champion Score) are reset automatically every 2,000 games (Factory Default Setting) [adjustable via Standard Adjustment 37,* ***HSTD Reset Count*** *].*

Reset Credits

To initiate, from the **RESET MENU**, select the "CRED" *Icon.* ⚠ **ONLY** the **Credits** *(includes Service Credits)* [adjustable via Standard Adjustment **23**, **Credit Limit**], will be reset to *zero (0), Factory Default Settings.* Follow the on-screen prompts to perform the **Reset**.

Reset Factory Settings

To initiate, from the **RESET MENU**, select the "FACT" *Icon.* ⚠ **ALL GAME DATA IS RESET!** *(with the exception of Earnings Audit 13, Software Meter).* ***NOTE:*** *IF YOU HAD* ***SET-UP CUSTOM PRICING*** *OR HAD CHANGED ANY ADJUSTMENTS OR* ***PERFORMED INSTALLS****, IT IS SUGGESTED TO WRITE DOWN YOUR CHANGES PRIOR TO THE FACTORY RESET.* Follow the on-screen prompts to perform the **Reset**.

Go To USB Menu

To initiate, from the **UTILITIES MENU**, select the "USB" *Icon.* The **USB MENU** provides three (3) functions to download game data, update your game code or backup your code onto a USB Memory Stick. *Review the inside cover for information on how to update your game code.*

Update Game Code

To initiate, from the **USB MENU**, select the "UPDT" *Icon.* Follow the on-screen prompts *or* review the inside cover for more information.

Dump Audits to USB

To initiate, from the **USB MENU**, select the "DUMP" *Icon.* Follow the on-screen prompts to perform a **Data Dump** (download).
Note: *If Icon is not present, access via the Audits Menu, see the Audits Section.*

Backup to USB Memory Stick

To initiate, from the **USB MENU**, select the "BKUP" *Icon.* Follow the on-screen prompts to perform a **Backup** (game code only). This backup feature does not retain adjustments and/or settings changes made.

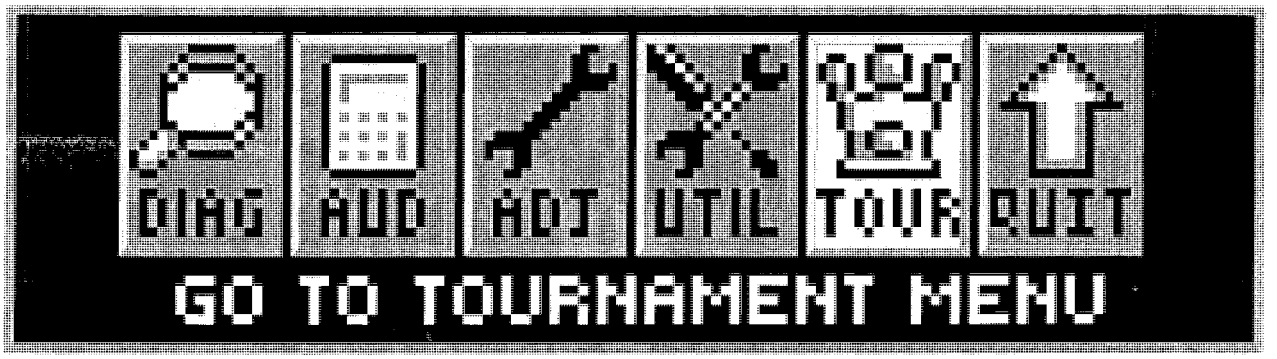

To initiate, from the **MAIN MENU**, select the "TOUR" *Icon*. The **TOURNAMENT MENU** provides ways to quickly and easily start and stop a tournament. Also, tournament data can be viewed *(audits, prize info, etc.).*

All **TOURNAMENT MENU** *Icons* and there usages are explained throughout this chapter in the same order as seen in the Dot Matrix Display. ***NOTE:*** Depending on Game Type, Version, selections made, Dip Switch settings, location and/or areas, some *Icons* may appear non-functional *or* may not appear at all. ***Icons*** *and/or* ***functions, order*** *and* ***operation are subject to change.***

In displays where changes can be made *or* to perform a function, use the **GREEN Button** to go **[BACK]**, exit *or* escape, the **RED Buttons** to [< / –] HIGHLIGHT PREVIOUS *or* DECREASE / [+ / >] HIGHLIGHT NEXT *or* INCREASE to highlight the desired option, and the **BLACK Button** to **[SELECT]** it *or* activate.

Start Tournament

To initiate, from the **TOURNAMENT MENU**, select the "STRT" *Icon*. The **START TOURNAMENT MENU** allows the operator to start a tournament. Select **QUICK START** *or* **CUSTOM** Tournament Start. For the first time Tournament Set-Up, it is recommended to select **CUSTOM**. Follow the on-screen prompts. After completion of all options in **QUICK START** *or* **CUSTOM**, the Tournament is started, the **START TOURNAMENT MENU** is exited and returns to the **TOURNAMENT MENU.**

QUICK START :

Increase or decrease the: • **DAYS, HOURS** *and* **MINUTES** • **PRIZE POOL $ (DOLLAR)** *and* **¢ (CENT) AMOUNT** • **INCREMENT THE PRIZE POOL PER PLAY INCREASES $** *and* **¢ AMOUNT**

CUSTOM START :

- Confirm the current date and time *(if it was not set previous via the* ***UTILITIES MENU*** *it can be set-up in this display as well).* Enter the **MONTH, DAY, YEAR** and **TIME**
- Choose the Tournament **Start** Date: **MONTH, DAY, YEAR** and **TIME**
- Choose the Tournament **End** Date: **MONTH, DAY, YEAR** and **TIME**

- Choose the **CREDITS** per play desired (01-10). Set the maximum number of *Credits* that may be accumulated per game. ***Note:*** *The current pricing is displayed; to change pricing* ***GO TO THE ADJUSTMENTS MENU.***

Increase or decrease the: • **PRIZE POOL $ (DOLLAR)** *and* **¢ (CENT) AMOUNT**
• **INCREMENT THE PRIZE POOL PER PLAY INCREASES $** *and* **¢ AMOUNT**
• **MAXIMUM (CAP) PRIZE POOL $** *and* **¢ AMOUNT.**

- Increase or decrease the number of **PRIZES** (01-05 **HIGH SCORE**; 02-05 **B'N'W**). Set the maximum # of *Prize Positions* to be awarded during a Tournament. ***Selections are as follows*** *(% distribution cannot be changed):*

HIGH SCORE:			BUMP N' WIN :		
Set to **01**	1 Winner	**100%** (1) Prize Pool	*Cannot set to 01. Minimum of 2 winners required.*		
Set to **02**	2 Winners	**65%** (1) **35%** (2)	Set to **02**	2 Winners	**65%** (1) **35%** (2)
Set to **03**	3 Winners	**50%** (1) **30%** (2) **20%** (3)	Set to **03**	3 Winners	**50%** (1) **25%** (2) **25%** (3)
Set to **04**	4 Winners	**50%** (1) **25%** (2) **15%** (3) **10%** (4)	Set to **04**	4 Winners	**40%** (1) **20%** (2) **20%** (3) **20%** (4)
Set to **05**	5 Winners	**50%** (1) **20%** (2) **15%** (3) **10%** (4) **5%** (5)	Set to **05**	5 Winners	**40%** (1) **15%** (2) **15%** (3) **15%** (4) **15%** (5)

- Select the **AWARD TYPE** (CASH, POINTS, PRIZE, TICKETS *or* NONE). Select **CASH** for the displays to represent the Prize Pool amount *(based on Jackpot Base and Max.)* in ***$Dollars.*** Select **POINTS** for the display to represent the Prize Pool amount in ***Points.*** Select **PRIZE**, if applicable. Select **TICKET** for the display to represent the Prize Pool amount in ***Tickets.*** Select **NONE** ***NOT TO*** represent anything.

Custom Start continued on the next page.

CUSTOM START Continued.

*The following option is available only if **CASH** was selected as the **AWARD TYPE**.*

- Select the option to **SHOW PLAYER CASH** (YES *or* NO). Select **YES** for the display to represent the >>> **previous** <<< Tournament Winners & Cash amount *(or Points, Prizes, etc.)* will show in the ***Attract Mode***.

- Select the kind of **TOURNAMENT** desired (BUMP 'N' WIN *or* HIGH SCORE).

*The following options are available only if **BUMP 'N' WIN** was selected as the **TOURNAMENT TYPE**.*

- Select *or* confirm the **BASE POINT AMOUNT** (00 *or* 1,000,000 – 4,294,967,295 increments of 1,000,000.
- Select *or* confirm the **RANGE AMOUNT** (00 *or* 1,000,000 – 4,294,967,295 increments of 1,000,000).

- Select the **BALLS** per game (1 – 10).

STOP TOURNAMENT

To initiate, from the **TOURNAMENT MENU**, select the "STOP" *Icon*. The **STOP TOURNAMENT MENU** allows the operator to stop a tournament. ***Note:*** *This Icon only appears if a Tournament was set-up and is running (in place of the Start Icon).*

STOP TOURNAMENT ARE YOU SURE?

- Use the **BLACK Button** to **[SELECT]** to confirm. Press the **BLACK Button** again to continue.

The **STOP TOURNAMENT MENU** is exited and returns to the **TOURNAMENT MENU**.

VIEW TOURNAMENT DATA

To initiate, from the **TOURNAMENT MENU**, select the "DATA" *Icon*. If no data is available, the display will indicate NO PREVIOUS DATA. Press the GREEN Button to escape **[BACK]** to the **TOURNAMENT MENU**.

TOURNAMENT AUDITS [#1 – #14]

To initiate, from the **TOURNAMENT MENU**, select the "AUD" *Icon*. The Dot Matrix Display will indicate the *audit number (in this group), audit name* and the *audit total or value*. The current audit will remain on the display until the next audit is viewed or when this sub-menu is exited.

01	**TOTAL PLAYS :** Total number of *Regular* and *Tournament Games* played while a *Tournament is in progress.* This total is derived by adding the below Tournament Audit 02 with ***Regular Plays.***
02	**TOURNAMENT PLAYS :** Total number of *Tournament Games* played while a *Tournament is in progress.*
03	**TOTAL QUALIFYING PLAYS :** Total number of times a player qualified *(invited to enter name).*
04	**TOTAL GAME EARNINGS :** Total Gross Earnings *accepted,* while a *Tournament is active (in progress).*
05	**TOTAL TOUR. EARNINGS :** Earnings *(Audit 04 less Reg. Game Earnings)* while a *Tournament is in progress.*
06	**PRIZE POOL TOTAL :** Total Prize Pool *(Jackpot)* Amount to be paid out while a *Tournament is in progress.*
07	**NET EARNINGS :** Provides the total Net Earnings *(Gross Earnings less Prize Pool)* while a *Tournament is active.*
08	**ACCUM. TOTAL PLAYS :** Accumulative total amount of *Regular & Tournament Games* played since the first Tournament was played.
09	**ACCUM. TOUR. PLAYS :** Accumulative total amount of *Tourn. Games* played since 1st Tournament was played.
10	**ACCUM. QUALIFYING PLAYS :** Accumulative total number of times a player qualified *(invited to enter name).*
11	**ACCUM. EARNINGS :** Total Gross Earnings *accepted,* since the first Tournament was played.
12	**ACCUM. TOUR EARNINGS :** Accumulative total Tournament Game Earnings since the first Tournament was played.
13	**ACCUM. JACKPOT :** Accumulative total of Prize Pool Amounts paid out since the first Tournament was played.
14	**# TOURNAMENTS :** Number of Tournaments *(not individual Games)* since the first Tournament was played.

SIGN MESSAGES A–B

To initiate, from the **TOURNAMENT MENU**, select the "A-B TEXT" *Icon. At time of print, menu non-functional. If made available in future code updates, this menu will allow the operator to display "Location" and "Prize" Messages.* Follow the on-screen prompts to complete [END].

Remember, use the **GREEN Button** to go **[BACK]**, exit *or* escape, the **RED Buttons** to [< / –] MOVE LEFT / CHOOSE NEXT [+ / >] MOVE RIGHT / CHOOSE PREVIOUS, and the **BLACK Button** to **[SELECT]** *as 'OK'.*

SAM System Circuit Board and BOOT ROM Compatibility Chart

Game Name	CPU Bd. No.	I/O PWR DRV Bd. No.	U9 Pinball Boot ROM
World Poker Tour	520-5246-00	520-5249-00	V3.1
Pirates Of The Caribbean	520-5246-00	520-5249-00	V3.1
Family Guy	520-5246-00	520-5249-00	V3.1
Spider-Man	520-5246-00	520-5249-00	V3.1
Wheel Of Fortune	520-5246-00	520-5249-00	V3.1
NBA	520-5246-00	520-5249-00	V3.1
CSI	520-5246-00	520-5249-00	V3.1
Batman	520-5246-00	520-5249-00	V3.1
Indiana Jones	520-5246-00	520-5249-00	V3.1
Shrek	520-5246-00	520-5249-00	V3.1
24	520-5246-00	520-5249-00	V3.1
Avatar	520-5246-00	520-5249-00	V3.1
Big Buck Hunter	520-5246-00	520-5249-00	V3.1
Iron Man	520-5246-00	520-5249-00	V3.1
The Rolling Stones	520-5246-00	520-5249-00	V3.1
Tron	520-5246-00	520-5249-00	V3.1
Avatar L/E	520-5303-03	520-5249-00	V3.1
The Rolling Stones L/E	520-5303-03	520-5249-00	V3.1
Tron L/E	520-5303-03	520-5317-00	V3.1
Transformers	520-5246-02	520-5249-00	V2.0
Transformers L/E	520-5303-04	520-5317-00	V2.0
AC/DC	520-5337-01	520-5249-00	AC/DC 1.0
AC/DC (L/E)	520-5337-00	520-5317-00	AC/DC 1.0
X-MEN	520-5246-02	520-5249-00	V2.0
X-MEN (L/E)	520-5303-04	520-5317-00	V2.0
Avengers	520-5246-02	520-5249-00	V2.0
Avengers L/E	520-5303-04	520-5317-00	V2.0
Metallica	520-5337-01	520-5249-00	V1.0
Metallica L/E	520-5337-00	520-5317-00	V1.0
Star Trek	520-5352-00	520-5249-00 (REV. D)	V1.0 (64M)
Star Trek L/E	520-5352-01	520-5317-00	V1.0 (64M)
Mustang	520-5352-00	520-5249-00 (REV. D)	V1.0 (64M)
Mustang L/E	520-5352-01	520-5249-00 (REV. D)	V1.0 (64M)
Batman (Standard)	520-5303-00	520-5249-00	V3.1
Iron Man (Classic)	520-5303-01	520-5304-00	Not Used
The Simpsons Kooky Carnival (RED)	520-5246-00	520-5249-00	V3.1

Optional Kits available through your Distributor:

Pinball Location Maintenance Standard Kit (for MUSTANGE LE Pinball).....502-6002-F2

Standard Kit includes : *8 oz. Novus Wax #2 Fine (Red) (**675-0003-01**), Cloth, Rubber Rings (used above playfield), Bulbs (Bulb quantities vary and is limited to 25 per type), Fuses (1/per type) and 4 Pinballs.* ***Note:*** *Quanties, sizes and contents subject to change without notice.*

Pinball Location Maintenance Deluxe Kit (for MUSTANG LE Pinball) 502-6003-F2

Deluxe Kit includes : *Pinball Location Maintenance Standard Kit as described above plus a quantity of Flipper Rebuild Kits.* ***Note:*** *Quantity varies which equals the same quantity of flippers used in this game.*

▲ THIS GAME KIT INCLUDES (2) FLIPPER REBUILD KITS ▲

PLASTIC*KIT (for MUSTANGE PRO Pinball).....803-5000-F1

Plastic kit includes: Plastic Sets 830-6928-XX,830-6940-XX)

Plastics*Kit (for MUSTANG LE/PRE.Pinball).....803-5000-F2

Plastics Kit includes:Plastic Sets (830-6941-XX,830-6942-XX)

Decals* Kit (for MUSTANG PRO).....802-5000-F1

Decals kit include:Decal Set (820-7917-XX)

Decals*Kit (for MUSTANG LE,Pre.Pinball)..... 802-5000-F2

Decals Kit includes: Decal Set (820-7917-XX,820-7920-XX,) for Pro/Premium/LE

***Attention:** No individual Plastic or Decal can be ordered separately, unless noted otherwise. Plastics & Decals are subject to change without notice during and / or after production. Key Fobs subject to availability and may or may not be included in the plastic set. All designs, shapes & pieces used subject to change without notice. Kit contents subject to change. Service Bulletin(s) will announce any critical changes, if warranted. The last 2-digits shown on plastics or decals are for reference only.

MUSTANG LE Parts available through your Distributor:

Flipper Button Assy Blue 500-5026-35

Leg Assy Bentley Blue.....500-5921-75

Front Molding Bentley Blue.....515-8646-75

Left Side Armor Bentley Blue.....535-0902-01-75

Right Side Armor Bentley Blue.....535-0902-02-75

Pivot Hinge Right Bentley Blue.....535-7999-75R

Pivot Hinge Left Bentley Blue.....535-7999-75L

Bottom Arch Steel Satin Black.....535-8406-11

Mustang LE Backglass.....830-52F2-00

Cabinet & Back-box Decals sold as a complete set.....802-5001-F2
part#820-66F2-01 left back-box,820-66F2-02 right side back-box,820-66F2-03 left side cabinet,820-66F2-04 right side cabinet,820-66F2-05 front cabinet

MUSTANG Premium Parts available through your Distributor:

Flipper Button Assy Yellow.....500-5026-36

Leg Assy Assy Wrinkle Black..... 500-5921-50

Front Molding Wrinkle Black.....515-8646-00

Left Side Wrinkle Black.....535-0902-01-00

Right Side Wrinkle Black.....535-0902-02-01

Pivot Hinge Right Wrinkle Black.....535-7999-01

Pivot Hinge Left Wrinkle Black.....535-7999-00

Bottom Arch Steel Satin Black.....545-8406-11

Mustang Premium Backglass.....830-52F3-00

Cabinet & Back-box Decals sold as a complete set.....802-5001-F3
Consist of the following parts: 820-66F3-01 left back-box,820-66F3-02 right side back-box,820-66F3-03 left side cabinet,820-66F3-04 right side cabinet,820-66F3-05 front cabinet.

ITEM	QTY.	PART NUMBER	DESCRIPTION
1	1	515-9695-00	BACK, BACK BOX
2	1	525-5831-03-17	SIDE PANEL-LEFT, LE BACK BOX
3	1	515-9694-00	BOTTOM BRKT; BACK BOX
4	1	525-5831-04-17	SIDE PANEL, RIGHT, BILL LE
5	1	355-6158-00	LOCK BB BLACK, Short
6	2	077-5214-01	FLUORESCENT BULB SOCKET - ROHS COMPLIANT
7	1	535-7739-00	FLUOR. LIGHT MTG BRKT, LEFT
8	1	535-7739-01	FLUOR. LIGHT MTG BRKT, RIGHT
9	2	254-5080-00	SPACER, #8-1/4"
10	2	040-5000-23	WIRE CLAMP, 1/4" CLOSED TAB
11	1	165-5011-01	STARTER: FLUORESCENT
12	2	535-0828-00	FLUOR ADAPTOR BRKT
13	2	545-7867-00	LOGO PLATE - BB
14	2	535-0829-00	SHIELD PLATE, BILL BB
15	1	820-6082-00	CAUTION HIGH VOLTAGE LABEL
16	1	820-6266-02	CAUTION, BALLAST LABEL
17	1	820-6384-00	BACKBOX FUSE LABEL
18	1	355-5168-00-NUT	NUT: LOCK
19	1	30-2227-02	CAM 1-1/2 X 1/4" OFFSET
20	1	Production Glass Assy	GLASS ASSY: GAME SPECIFIC, IN FINAL PACK
21	1	520-5249-00	[illegible] Bd
22	1	520-5352-01	CPU Bd
23	1	520-5326-02	12 Transistor Bd
24	1		
25	1	010-5015-00	BALLAST CU452-W
26	20	240-5104-00	8-32 KEPS NUT
27	17	232-5301-00	SCREW, 8-32 X 3/8" PPH SEMS
28	1	237-5805-00	SCREW, #6 X 1/2" PPH AB B/O
29	4	040-5000-09	WIRE CLIP, 1" OPEN TAB
30	3	040-5000-06	1/2" CABLE CLAMP
31	4	237-5602-00	SCREW, 8-32 X 1/2 PPH MS, ZINC
32	2	040-5005-00	CABLE TIE - SCREW ON
33	6	237-6307-20	#6-32 TORX STAINLESS STEEL SCREW
34	8	232-5301-01	# 8-32 X 3/8" PPH MS SEMS SCREW - BLACK
35	12	254-5000-19	NYLON SPACER - BLACK - 3/8 OD X .175 ID X 1/8"
36	2	254-5000-12	NYLON SPACER - BLACK - 3/8 OD X .175 ID X 3/8"
37	28	240-5102-00	8-32 NYLON LOCK NUT
38	3	077-5106-00	2-LUG STAND-UP REV. MOUNT SHORT SOCKET
39	2	077-5102-00	STAND-UP SOCKET, #89 - LONG
40	2	113-5034-05	LAMP - #89: BLUE LED
41	3	113-5034-08	LAMP - #89: WHITE LED
42	2	820-66E6-XX	DECAL: BILL LE BB SIDE
43	1	535-0834-00	REAR GLASS CHANNEL: BILL LE
44	1	535-0835-00	GLASS CHANNEL FRONT, BILL LE
45	1	545-7876-00	7/8" HOLE PLUG, PLASTIC, BLACK
46	2	545-7878-01	"L" EXTRUSION
47	2	545-7878-02	"L" EXTRUSION
48	3	545-0745-00	FISH PAPER: BULB MOUNT
49	6	240-5008-00	# 6-32 KEPS NUT
50	6	242-5001-00	#6 WASHER
51	14	234-5001-02	SCREW, #6 X 1/2" HWH
52	2	237-6010-00	#8-32 X 3/4" HWH MS
53	8	234-5101-00	SCREW, #8 X 1/2" SLT HWH AB ZINC
54	1	500-9824-01	SPEAKER PANEL - BILL LE

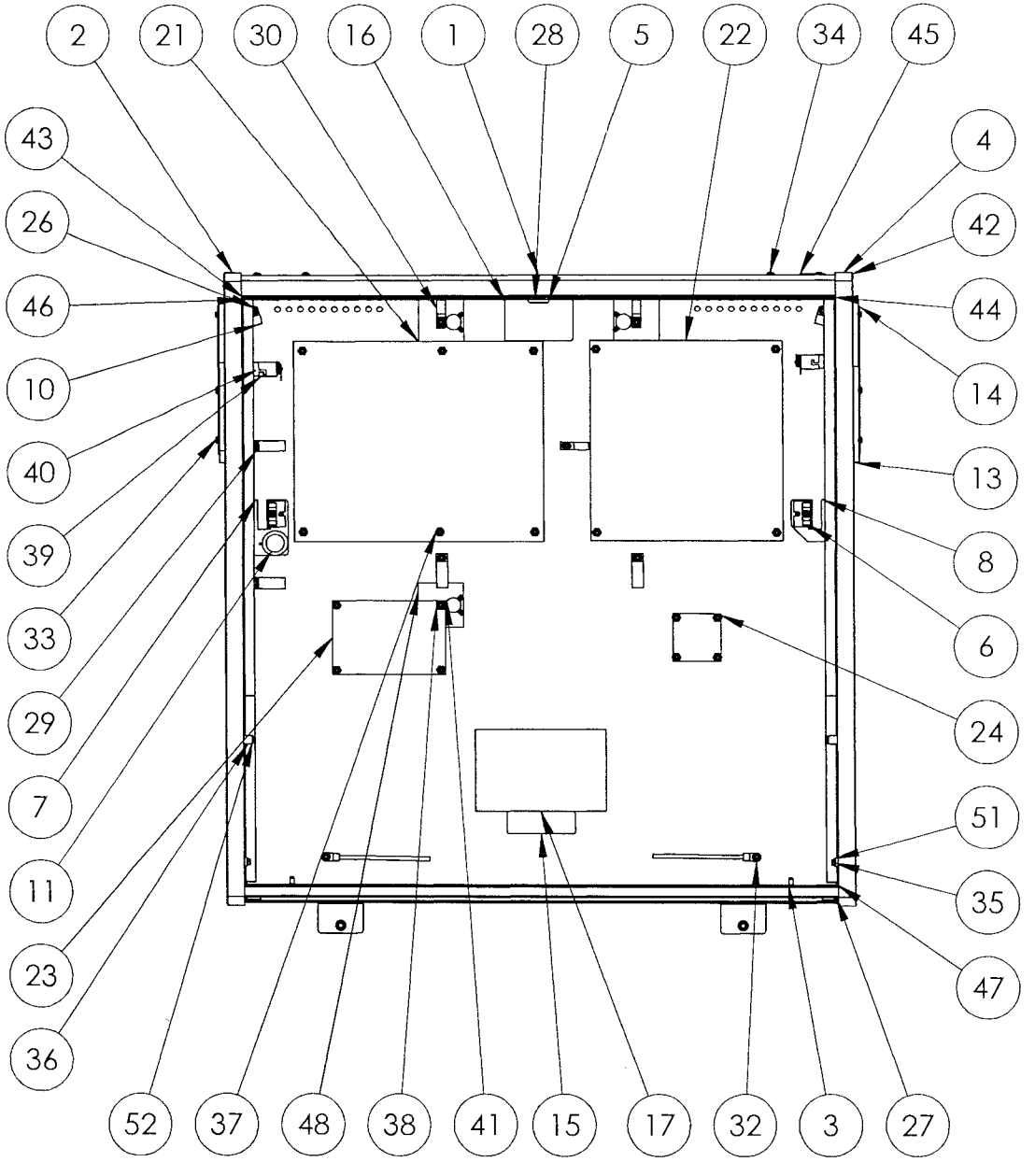

500-9823.03
BACK BOX ASSEMBLY

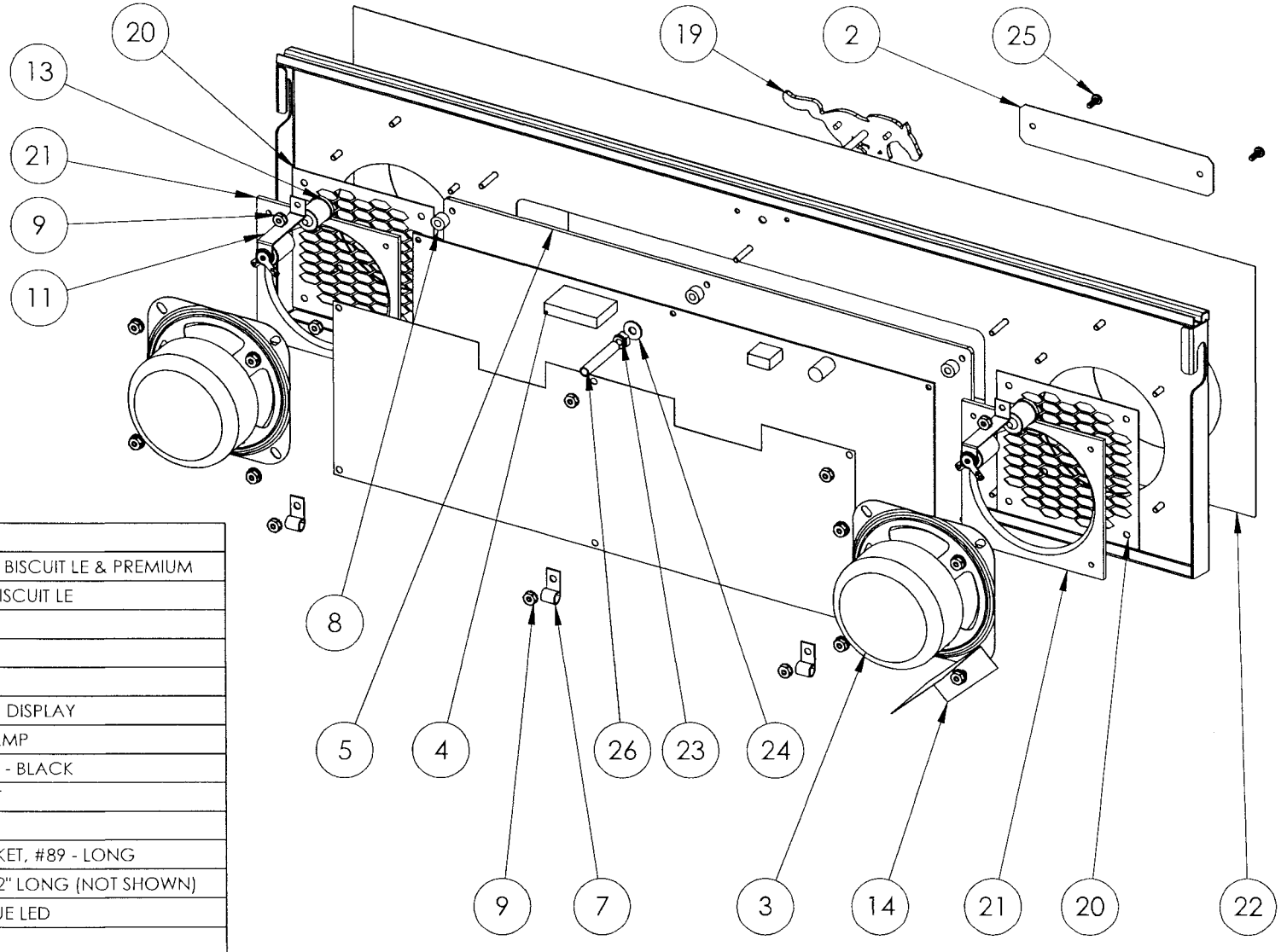

ITEM	QTY.	PART NUMBER	DESCRIPTION
1	1	515-9743-02	SPEAKER PANEL BISCUIT LE & PREMIUM
2	1	830-6943-00	NAME PLATE - BISCUIT LE
3	2	031-5004-02	SPEAKER
4	1	520-5052-15	LED DISPLAY
5	1	545-7849-01	DISPLAY LENS
6	1	545-7856-00	FISH PAPER: LED DISPLAY
7	3	040-5000-03	1/4" CABLE CLAMP
8	6	254-5000-09	NYLON SPACER - BLACK
9	16	240-5008-00	# 6-32 KEPS NUT
10	8	242-5001-00	#6 WASHER
11	2	077-5102-00	STAND-UP SOCKET, #89 - LONG
12	1	600-5006-12	GND CABLE - 12" LONG (NOT SHOWN)
13	2	113-5034-05	LAMP - #89: BLUE LED
14	1	545-7877-00	FISCHE PAPER
15	1	036-5260-33	14 PIN RIBBON (NOT SHOWN)
16	1	036-5452-02	2 SPKR IN SERIES (NOT SHOWN)
17	1	036-5520-00	LED DISPLAY 5V (NOT SHOWN)
18	1	036-5605-14-E6	LE SPEAKER FLASH LAMP
19	1	535-0876-00	MUSTANG EMBLEM
20	2	535-0878-00	SPEAKER GRILL - BISCUIT LE
21	2	545-7890-12	SPEAKER LOGO - FLUORESCENT BLUE
22	1	820-8335-00	BISCUIT PRO & LE
23	1	240-5206-00	#10-24 NYLON LOCK NUT
24	1	242-5010-00	#10 WASHER, .50 O.D. X .047 THK
25	2	237-6307-06	#6-32 TORX STAINLESS STEEL SCREW
26	1	605-5004-01	SHRINK TUBE

500-9852-02
SPEAKER PANEL ASSEMBLY
MUSTANG LE

Cabinet - Parts & Switches ☐

For Backbox Parts see the previous two pages.

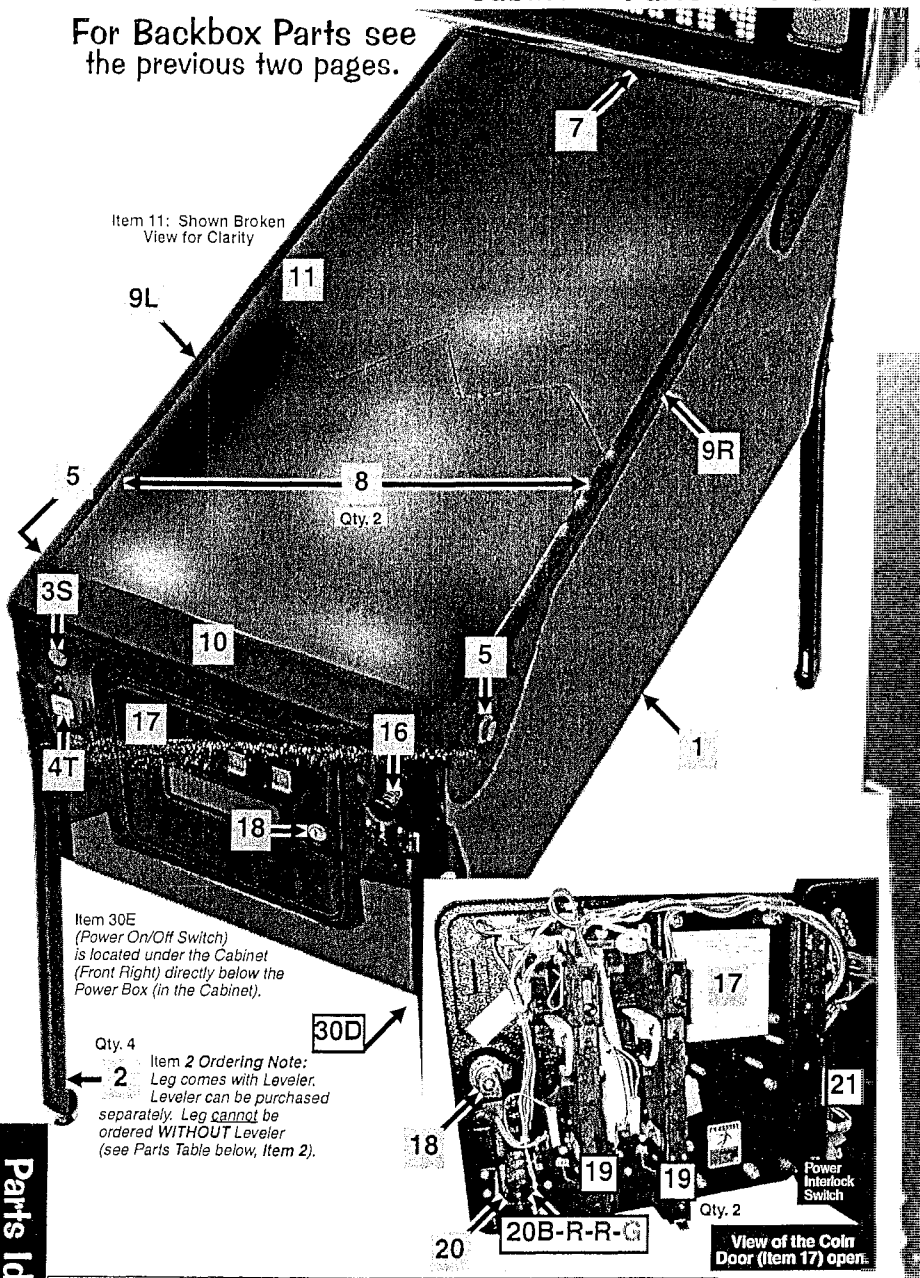

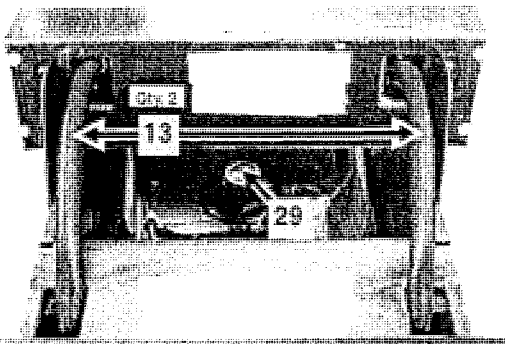

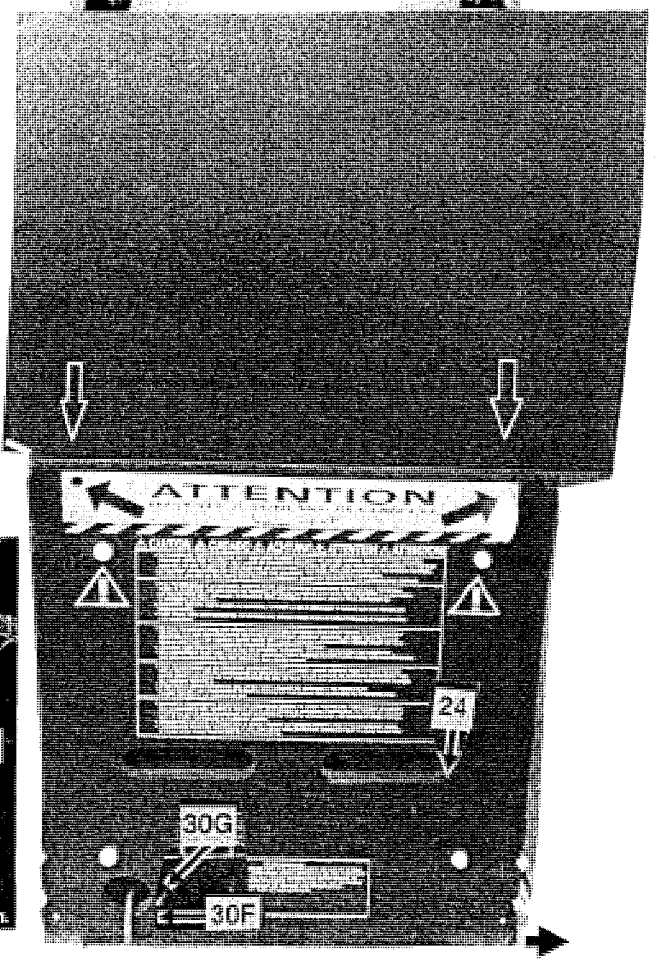

Parts Identification

Nr.	CAB. PARTS & SWITCHES	QTY.	SPI PART Nr.
1	Screened Cabinet Mustang LE (No Parts)		525-5834-00
2	Tiger Drylac Blue Legs with leveler	4	500-5921-58

Item 2 is secured by: Leg Bolt Back Plate (535-5703-00) and Leg Bolt 3/8" X 16 X 2-1/2" Hex 5/8" Hd. (2/per) (231-5001-01) *Leg Leveler ONLY (3/8"-16 X 3") (500-5017-00).*

3S	Start Button (Green Round) with Sw. + Lamp	1	500-6388-44-LED
4T	Tournament Button (Yel. Sq.), w/Sw. + Lamp		500-6587-06-TL

Item 3S & 4T includes the Switch & Lamp (No Wiring; desolder old wiring where required). Switch or Bulb replacement: ↻ TWIST ↺ LOCK (-TL) >> not snap-in << Assembly Parts Included : Microswitch (180-5174-00); #555 Wedge Base Clear Bulb (165-5002-00); *If 4T is not desired, use optional Button Plug Black (500-6566-00). Requires 3-Lug Terminal Strip (055-5204-03) and Diodes, 1N4004 (Qty. 2) (112-5003-00) inside cabinet under button(s) for Lamp Operation (Diode for Switch, located on Switch.)*

5	Flipper Button (white) Assy (No Sw.)	2	500-5026-38

Item 5 is secured by: Pal Nut for Flipper Button (Metal) (Qty. 2/per) (240-5003-01) *Pal Nut inside cabinet secured by:* #8 X 1/2" SHWH AB (Zinc) (Qty. 1/per) (234-5101-00) and Washer (Zinc), .187" ID X .875" OD X .048" Thick (Qty. 1/per) (242-5059-00)

6S	Flipper Switch Single Assembly	1	500-6889-01

Assembly Parts Included : Flipper Switch Stack Single *(Paliney Contact)* (180-5160-01) and Capacitor - Ceramic .05 Mfd 25 volt (130-5001-00)
Item 6S/6D are secured to Cab. by: #6 X 1-1/4 SHWH AB (Zinc) (Qty. 2/per) (237-5959-00)

6D	Flipper Switch Double Assembly	1	500-6890-01

Assembly Parts Included : Flipper Switch Stack Double *(Paliney Contact)* (180-5164-01) and Capacitor - Ceramic .05 Mfd 25 volt (130-5001-00)
Item 6S/6D are secured to Cab. by: #6 X 1-1/4 SHWH AB (Zinc) (Qty. 2/per) (237-5959-00)

Nr.	CAB. PARTS & SWITCHES	QTY.	SPI PART Nr.
7	Rear Glass Channel 20-3/8" Length	1	545-5038-00
8	Plastic Channel 42-5/8" Lg. (Left/Rt.)	2	545-5017-00
9L	Side Armor (Left)	1	535-0678-01
9R	Side Armor (Right)	1	535-0678-02

Items 9L & 9R are secured @ front & side by: Pem Stud 1/4 X 1" Flange Head Black (Qty. 1/per) (237-6116-01), 1/4-20 Flange Nut (Qty. 1/per) (240-5300-00) and #8 X 1/2" T20 Tamper Proof Black (Qty. 5/per) (237-6173-05); @ rear (backbox) by: #10-24 X 1" Sq. Neck Carrg. Bolt Black (Qty. 1/per) (231-5021-00) and #10-24 Hex Nut (Qty. 1/per) (240-5202-00)

10	Front Molding (Tigar Drylac Blue) < W/Button Hole >	1	515-8646-58

Item 10 Includes: Self-Adhesive Foam Rubber 3/8" X 3/16" X 20-3/8" (3') (626-5001-00) *Items 10 works with Item 22 (next page) ONLY.*

11	Playfield Glass (Tempered) 21" X 43" X 3/16"	1	660-5001-00
13	Corrugated Tubing Black 1"ø X 2.6' Lg.	1	605-5008-03

Above Item 13 covers the Cable Wiring Harnesses going into the Backbox from the Cabinet.

16	Ball Shooter (Plunger) Assembly	1	500-6146-00-07

Cabinet - Parts ■ & Switches □ Continued

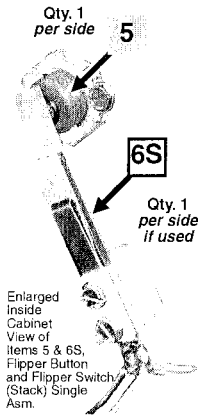

Enlarged Inside Cabinet View of Items 5 & 6S, Flipper Button and Flipper Switch (Stack) Single Asm.

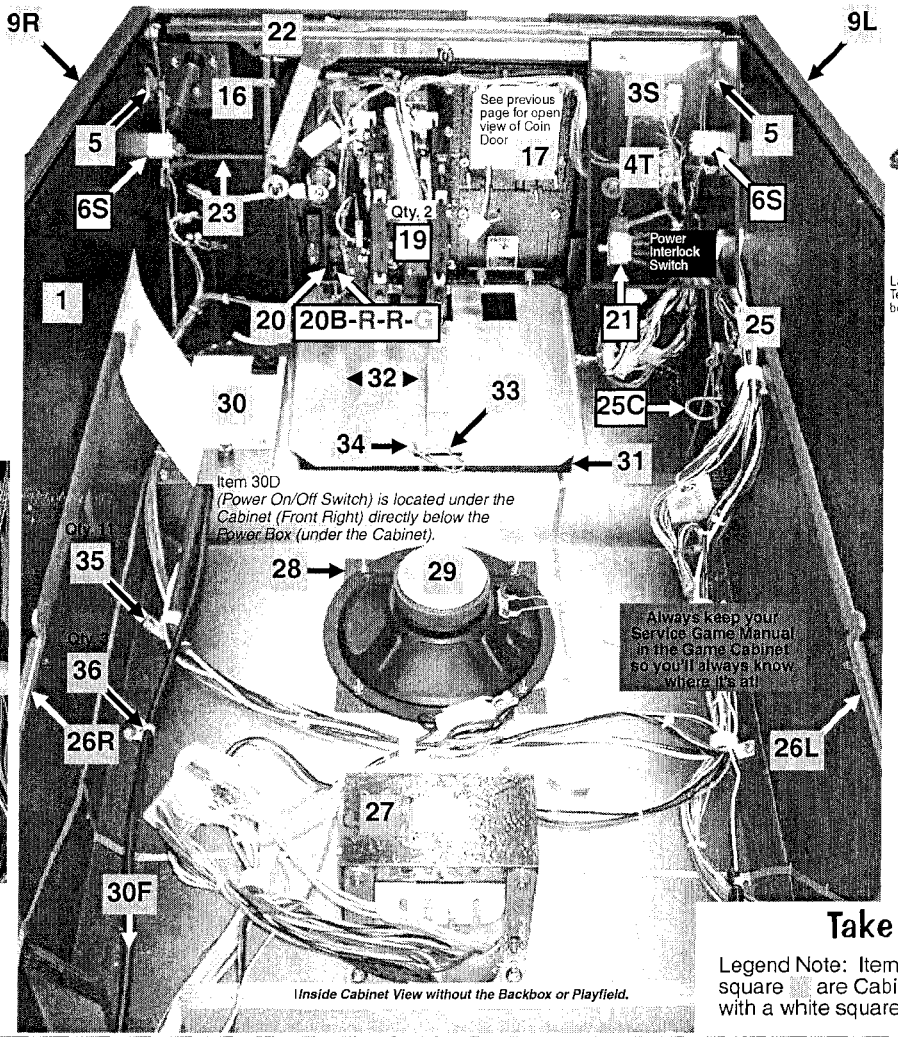

Inside Cabinet View without the Backbox or Playfield.

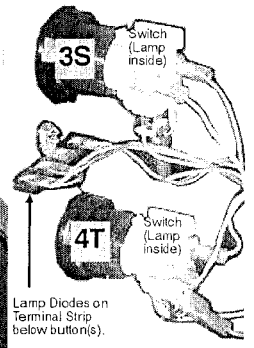

Lamp Diodes on Terminal Strip below button(s).

Enlarged Inside Cabinet View of Items 3S, 4T and 25 (25B, 25C, 25H & 25W), Plumb Bob Tilt Switch.

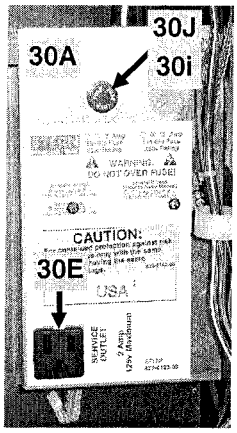

Enlarged Inside Cabinet View of Items 30, Power Box (30A), Service Outlet (30E), Fuse (30i) and Fuse Holder (30J).

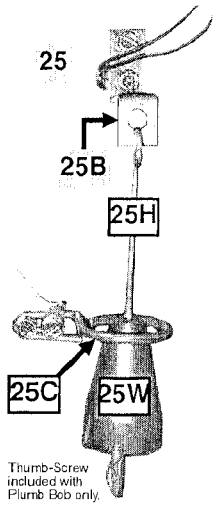

Thumb-Screw included with Plumb Bob only.

Take Note:

Legend Note: Items noted with a cyan square ■ are Cabinet Parts. Items noted with a white square □ are Switches.

Nr.	CAB. PARTS & SWITCHES	QTY.	SPI PART Nr.
◄ *PARTS TABLE & VIEWS CONTINUED FROM THE PREVIOUS PAGE.*			
17	Coin Door 2-Cht $V Up-Stk. 4-Button Bracket	1	501-5018-172
	Item 17 is secured by: 1/4"-20 X 1-1/4" Carriage Bolt Square Neck (Qty. 4) (231-5003-00) 1/4"-20 Flange Nut (Qty. 4) (240-5300-00) **and** Fend Washer 1/4" I.D. X 1" O.D. (Qty. 3) (242-5009-00) ***Note:*** *For Coin Door other than USA call Technical Support for SPI Part Nr.*		
18	Lock 5/8" Barrel, 3/4, Flt. Cam	1	**355-5055-00**
	Coin Door Switch (USA) (Happ)	2	180-5024-**01**
19	**ALT. SW.: 19C:** Coin Door Switch (USA) (Coin Control) (**180-5024-00**) **ALT. SW.: 19J:** Coin Door Switch (¥ Japan) (**180-5091-00**)		
	4-Button Bracket *(for Service Menu Buttons)*	1	535-6860-04
20	**SWITCH: 20B:** Push-Button Service Switch (**Black**) (**180-5192-00**) **SWITCH: 20R:** Push-Button Service Switch (Red) (Qty. 2) (**180-5192-02**) **SWITCH: 20G:** Push-Button Service Switch (Green) (**180-5192-04**)		
	Ordering Note: *Securing hardware for switches included. Decal in kit sold separately.*		
21	Power Interlock-Memory Protect Switch Asm.	1	500-5808-05
	Assembly Parts Included : Mounting Bracket (**535-9794-00**), Power Interlock (Playfield) Switch (**180-5136-00**) **and secured by:** #8 X 1/2" SHWH AB (Zinc) (Qty. 2) (234-5101-00)		
22	Front Molding Lockdown Asm.	1	500-7237-00
	Item 22 is secured by: #10-24 X 1-1/4" Carr. Bolt (Qty. 2) (231-5012-00) **and** #10-24 Keps Nut (Qty. 2) (240-5207-00)		
23	Lockdown Spring *(connected to handle)*	1	265-5008-00
	Item 23 is secured by: #8 X 1/2" SHWH AB (Zinc) (Qty. 1) (234-5101-00) **and** #10 Washer, 7/32" ID X 1/2" OD X 1/16" Thick (Qty. 1) (242-5003-00)		
24	Grills 2-1/2" X 18" *(on Back & Bottom)*	3	545-5072-02
	Plumb Bob Tilt Switch *Indivual Parts Only*		***Ind. Parts Only***
25	SWITCH: **25B:** Bracket for Hanger Wire (**535-5221-00**) **25C:** Contact Wire Form (**535-7563-01**) **25H:** Hanger Wire (**535-5319-02**) **25W:** Plumb Bob Weight (**535-5029-00**) *(includes Thumb-Screw)*		
	Item 25B is secured to Cabinet by: #6 X 5/8" SHWH AB (Zinc) (Qty. 4) (234-5002-00)		
26L	Slide & Pivot Support Bracket (Left)	1	535-5989-00
26R	Slide & Pivot Support Bracket (Right)	1	535-5990-00
	Items 26L & 26R are secured by: #10-24 X 1-1/4" Carriage Bolt Square Neck Black (3/per) (231-5012-00) **and** #10-24 KEPS Nut (3/per) (240-5207-00)		

Nr.	CAB. PARTS & SWITCHES	QTY.	SPI PART Nr.
27	Transformer 5.7VAC *(with Ballast Winding)*	1	010-5012-01
	Item 27 is secured by: 1/4"-20 X 5/8" PPH MS (Zinc) (Qty. 4) (237-5854-00) **and** 1/4" Split Lock Washer (Qty. 4) (244-5000-00)		
28	Woofer (Speaker) Grill 7" X 7"	1	545-5072-03
29	Woofer 8" ø Round 8010 4Ω	1	031-5007-01
	Items 28 & 29 are secured by: #6-32 X 1-1/4" Fin Shank Screw (Qty. 4) (237-5883-00) **and** #6-32 Keps Nut (Qty. 4) (240-5008-00)		
	Power Input Box Asm. + Univ. Cable	1	515-5360-08
30	**30A:** Power Box *(No Parts)* Mounting Frame (**535-5932-00**) **30B*:** Line Filter (**150-5000-00**) **30C*:** Varistor* TNR159211KM (Domestic) (**150-5001-00**) *or* Varistor TRM15G431KM (Euro) (**150-5002-00**) SWITCH: **30D:** On/Off Rocker Switch + Bracket Assembly (**515-7085-00**) ***30D incl.:*** Switch, APEM R2101C5NBB (**180-5001-03**) + Bracket (**535-8318-00**) **30E:** Service Outlet (3-Prong / US) (**180-5008-01**) / International N/A **30F:** Line Cord 10' ROJ 3" + Ring Terminal Asm. (**515-6566-00**) **30G:** Recessed (Black) Cup *(rear of Cabinet)* (**545-5122-00**) **30H*:** Snap Bushing 9/16" (White) (**280-5001-01**) **30i:** Fuse 8 Amp 250V Slo-Blo (Domestic) (**200-5000-05**) *or* Fuse 5 Amp 250V Slo-Blo (International) (Qty. 2) (**200-5003-00**) **30J:** Fuse Holder (**205-5001-00**)		
	Universal Cable & Jumper Caps *(all voltage variations): See the Yellow Pages, Page y 10.*		
31	Cash Box Plastic Bottom	1	545-5090-00
32	Cash Box Cover (Validator)	1	535-5013-03
33	Cash Box Lock Bracket (U-Wire)	1	535-7562-00
	Item 33 is secured by: #8 X 5/8" HWH AB (Green) (Qty. 2) (234-5102-04)		
34	Large Hair-Pin Clip	1	535-7772-00
35	Clamps [Multiple Sizes]	36	040-5000-XX
	Item 35 is secured to Item 1 by: #8 X 1/2" SHWH AB (Zinc) (Qty. 1/per) (234-5101-00) ***For following sizes, replace -XX with:*** 3/4" Single = -08 (Qty. 9); 1-1/2" Single = -10 (Qty. 3)		
36	Zip Cable Tie (Screw Down Style)	6	040-5005-00
	Item 36 is secured by: #8 X 1/2" SHWH AB (Zinc) (Qty. 1/per) (234-5101-00)		
37†	Meter +12VDC ***with Bracket Optional***		***opt.* G-0053-013-102**
	*† Meters (Diode included) are optional and were not included in this Pinball Machine. Order without the bracket use **G-0053-013-102A**. More information or Qs? Call Technical Support.*		

Parts Identification

Main Playfield Top Parts

01. Upper Ramp Assy	1	500-9837-00
02. Ramp Flash Billboard Assy	1	511-7552-33
03. Turntable Assy (Reference-Top & Bottom)	1	516-6780-00
04. Lower Ramp Assy	1	500-9837-01
05. Jackpot Billboard Assy	1	511-7552-19
06. Ball Diverter Assy	1	500-9849-00
07. Pop Bumper Top Assy(511-7552-15 Plas)	4	516-0033-02
08. Buty Assy #13	1	511-7552-13
09. Left Plastic Ramp Assy	1	545-7851-01
10. Slingshot Assy (Reference Bottom)	2	500-5849-01-ND
11. Flipper Bat (Yellow)	2	515-5133-06
12. Flipper Bat Rubber (Black)	2	545-5277-00
13. 1-way Gate Wireform	1	535-0885-00
14. Wire Gate Shield	1	535-9075-00
15. 180° Billboard Assy	1	511-7552-21
16. VUK Billboard Assy	1	511-7552-36
17. VUK Hole Protector	1	535-0896-00
18. Shooter Lane Metal Ramp	1	535-0845-01
19. Spinner Assy	1	511-5113-00
20. Right Plastic Ramp Assy	1	545-7858-00
21. Wire Ramp Weldment	1	535-0850-01
22. Plastic Bonus Bowl Assy	1	545-7858-01
23. Bottom Arch Steel (Satin Black)	1	535-8406-11
24. Front Molding Assy (Button Hole)	1	500-9838-75
25. Front Molding Assy Button	1	515-7791-00

Playfield Top Parts

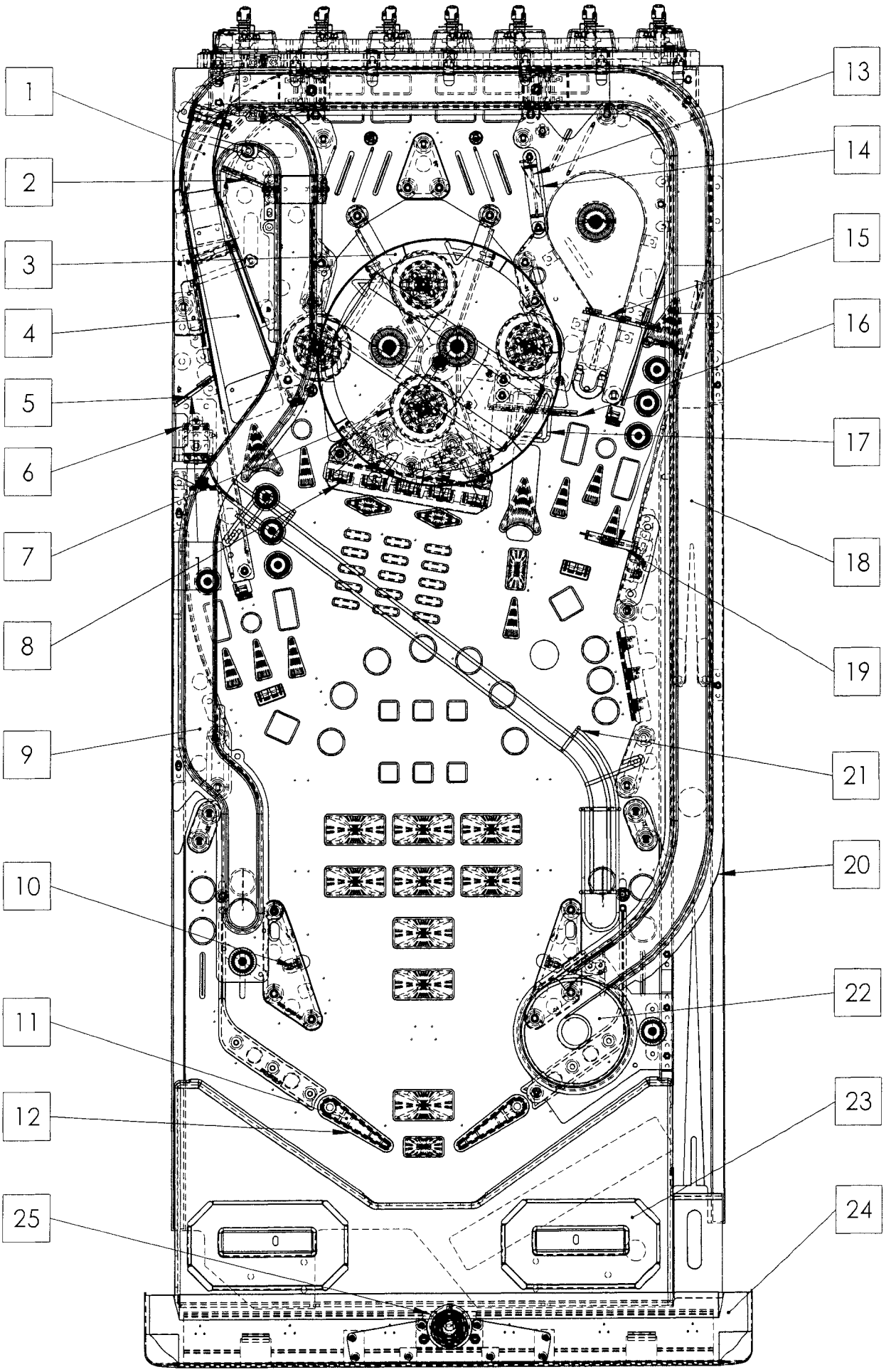

Main Playfield Bottom Parts

01. Autoplunger Assy	1	500-9818-00
02. Turntable Assy (Reference)	1	516-6780-00
03. Eject VUK (Vertical Up Kicker)	1	500-6846-02
04. 1" S/U Tgt Assy (White)	3	500-5232-02
05. Buty Assy #25	1	511-7522-25
06. Buty Assy #26	1	511-7522-26
07. Buty Assy #28	1	511-7522-28
08. Slingshot Assy (26-1200)	2	500-5849-01-ND
09. Right Flipper Assy (09-5032-ND)	1	500-6543-02-ND
10. 6-Ball Trough Assy	1	500-6318-16-ND
11. Upper Ramp Actuator Assy	1	500-9871-00
12. Lower Ramp Actuator Assy	1	500-9871-01
13. Pop Bumper Sw Assy	4	515-6459-09
14. Pop Bumper Bottom Assy	4	515-6459-09
15. Dual 1-1/2" S/U Tgt Assy	1	500-9870-00
16. 1" S/U Tgt Assy (Purple)	1	500-6984-09
17. Left Flipper Assy (09-5020-30-ND)	1	500-6543-13-ND
18. 1-Bank Drop Tgt Assy (W/Trip Coil)	2	500-9826-01
19. 5-Bank Drop Tgt Assy	1	500-7216-05
20. Buty Assy #30	2	511-7552-30
21. ½" S/U Tgt Assy (Purple)	3	500-6985-09
22. P/F Support Brkt	2	535-6862-05
23. Buty Assy #29	2	511-7552-29

Playfield Bottom Parts

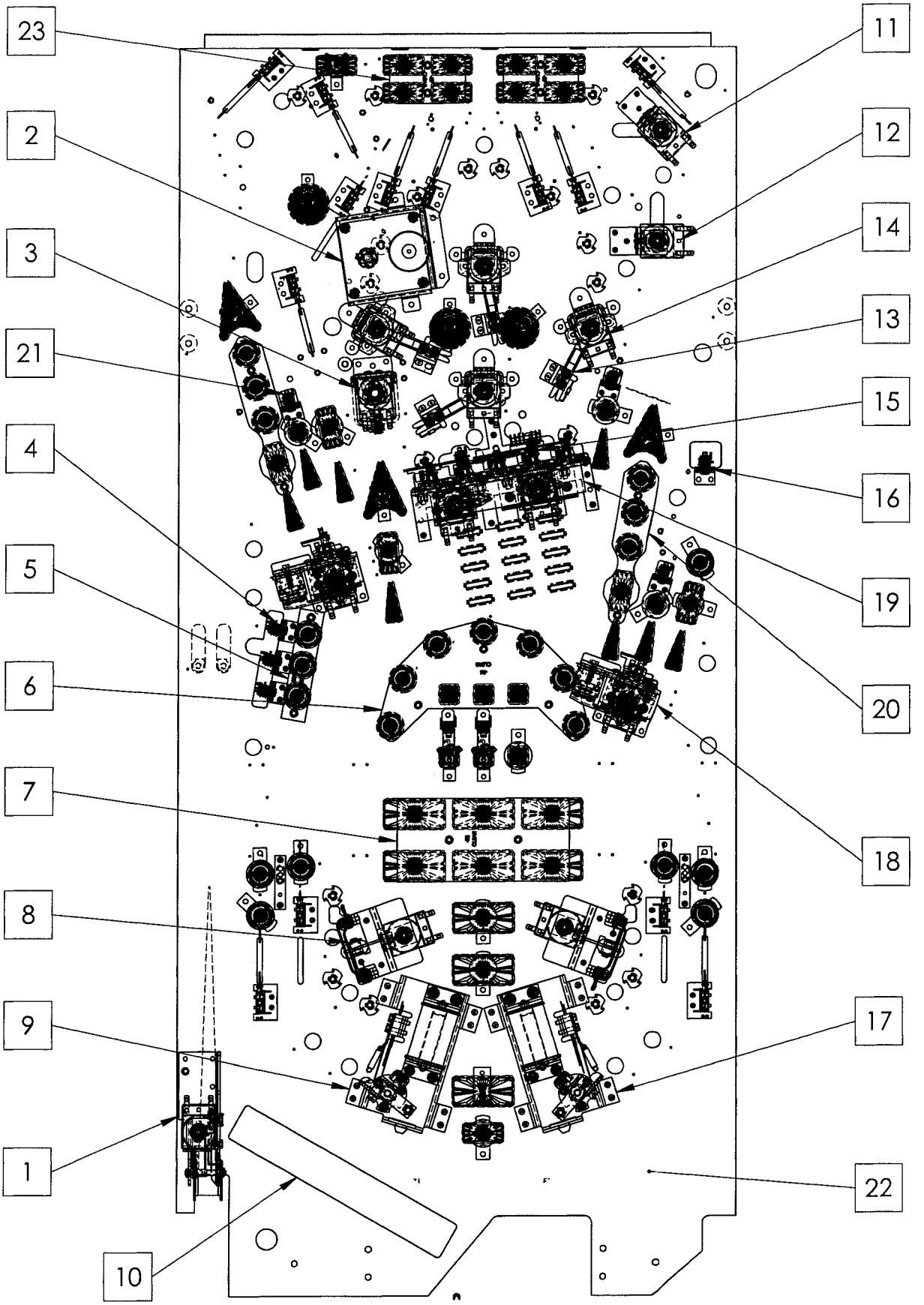

Playfield - Rubber Parts Black ■, White □ & Blue ▒ (Rings Actual Size) †

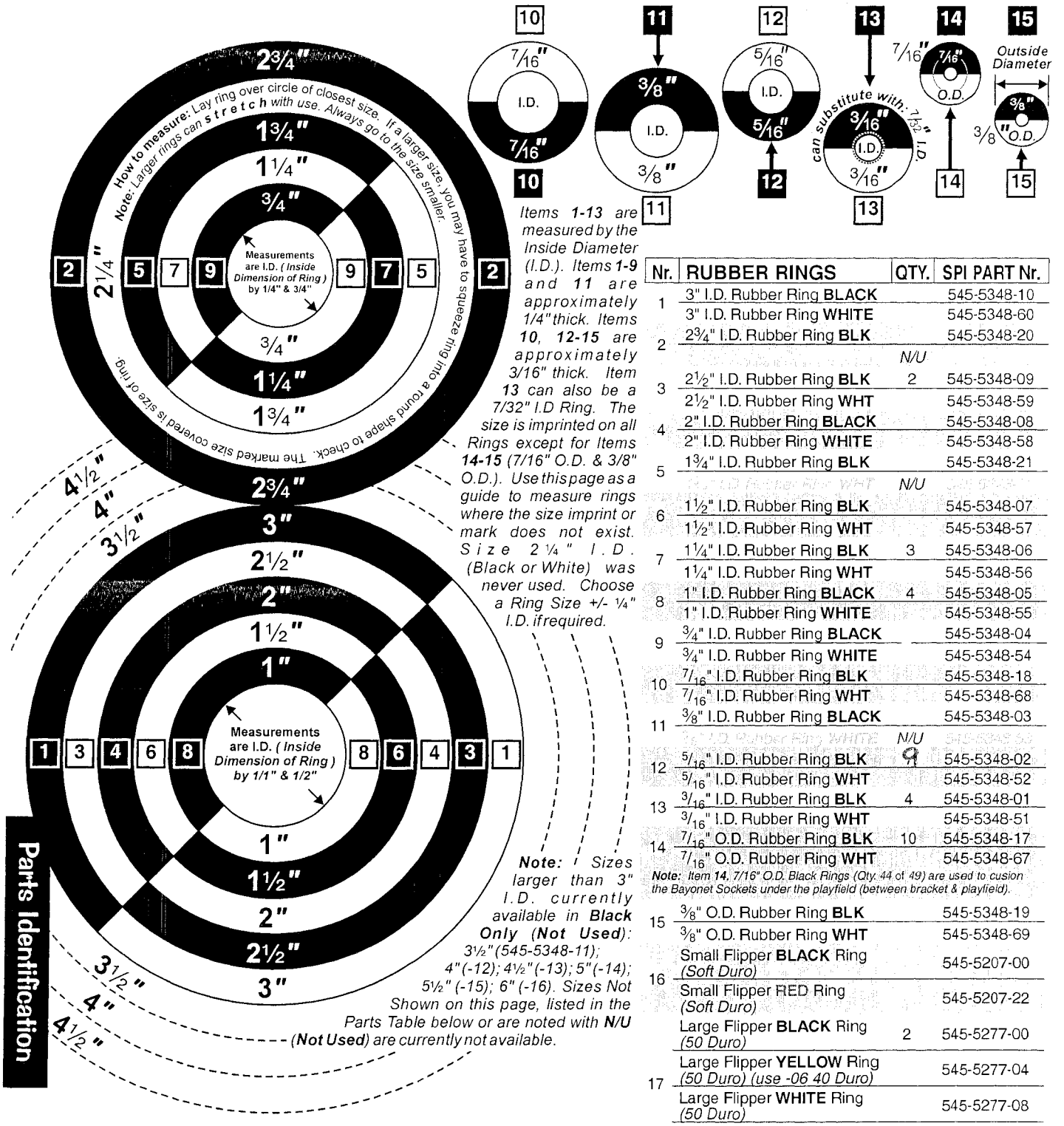

Items **1-13** are measured by the Inside Diameter (I.D.). Items **1-9** and **11** are approximately 1/4" thick. Items **10**, **12-15** are approximately 3/16" thick. Item **13** can also be a 7/32" I.D Ring. The size is imprinted on all Rings except for Items **14-15** (7/16" O.D. & 3/8" O.D.). Use this page as a guide to measure rings where the size imprint or mark does not exist. Size 2¼" I.D. (Black or White) was never used. Choose a Ring Size +/- ¼" I.D. if required.

Note: Sizes larger than 3" I.D. currently available in **Black Only (Not Used)**: 3½"(545-5348-11); 4"(-12); 4½"(-13); 5"(-14); 5½" (-15); 6" (-16). Sizes Not Shown on this page, listed in the Parts Table below or are noted with **N/U** (**Not Used**) are currently not available.

Nr.	RUBBER RINGS	QTY.	SPI PART Nr.
1	3" I.D. Rubber Ring **BLACK**		545-5348-10
	3" I.D. Rubber Ring **WHITE**		545-5348-60
2	2¾" I.D. Rubber Ring **BLK**		545-5348-20
		N/U	
3	2½" I.D. Rubber Ring **BLK**	2	545-5348-09
	2½" I.D. Rubber Ring **WHT**		545-5348-59
4	2" I.D. Rubber Ring **BLACK**		545-5348-08
	2" I.D. Rubber Ring **WHITE**		545-5348-58
5	1¾" I.D. Rubber Ring **BLK**		545-5348-21
		N/U	
6	1½" I.D. Rubber Ring **BLK**		545-5348-07
	1½" I.D. Rubber Ring **WHT**		545-5348-57
7	1¼" I.D. Rubber Ring **BLK**	3	545-5348-06
	1¼" I.D. Rubber Ring **WHT**		545-5348-56
8	1" I.D. Rubber Ring **BLACK**	4	545-5348-05
	1" I.D. Rubber Ring **WHITE**		545-5348-55
9	¾" I.D. Rubber Ring **BLACK**		545-5348-04
	¾" I.D. Rubber Ring **WHITE**		545-5348-54
10	7/16" I.D. Rubber Ring **BLK**		545-5348-18
	7/16" I.D. Rubber Ring **WHT**		545-5348-68
11	3/8" I.D. Rubber Ring **BLACK**		545-5348-03
		N/U	
12	5/16" I.D. Rubber Ring **BLK**	9	545-5348-02
	5/16" I.D. Rubber Ring **WHT**		545-5348-52
13	3/16" I.D. Rubber Ring **BLK**	4	545-5348-01
	3/16" I.D. Rubber Ring **WHT**		545-5348-51
14	7/16" O.D. Rubber Ring **BLK**	10	545-5348-17
	7/16" O.D. Rubber Ring **WHT**		545-5348-67

Note: *Item 14, 7/16" O.D. Black Rings (Qty. 44 of 49) are used to cusion the Bayonet Sockets under the playfield (between bracket & playfield).*

15	3/8" O.D. Rubber Ring **BLK**		545-5348-19
	3/8" O.D. Rubber Ring **WHT**		545-5348-69
16	Small Flipper **BLACK** Ring *(Soft Duro)*		545-5207-00
	Small Flipper **RED** Ring *(Soft Duro)*		545-5207-22
	Large Flipper **BLACK** Ring *(50 Duro)*	2	545-5277-00
17	Large Flipper **YELLOW** Ring *(50 Duro) (use -06 40 Duro)*		545-5277-04
	Large Flipper **WHITE** Ring *(50 Duro)*		545-5277-08
	Large Flipper **RED** Ring *(Soft Duro)*		545-5277-22

Take Note:

For Blue Rubber Pads, see the next page and/or the Blue Pages for the assembly the pads are found on for the part number.

Nr.	RUBBER BUMPER PADS	QTY.	SPI PART Nr.
A*	Bumper **BLK** Pad (Lg. w/ grommet)	4	545-5428-00
	Item A are located on Flipper Assemblies. See next page for location.		
B*	Bumper **BLK** Pad (Sm. w/ grommet)		545-5105-00
	Item B are located on multiple assemblies. See next page for location.		

Nr.	RBR. BUMPER POST SLVS.	QTY.	SPI PART Nr.
D*	Bumper **BLACK** Post Sleeve (Tall)		545-5308-65
	Item D in RED use 545-5308-22; Item D in WHITE use 545-5308-08.		
E*	Bumper Post Sleeve (Short)		545-5151-00

Parts Identification

Playfield Rubber Parts

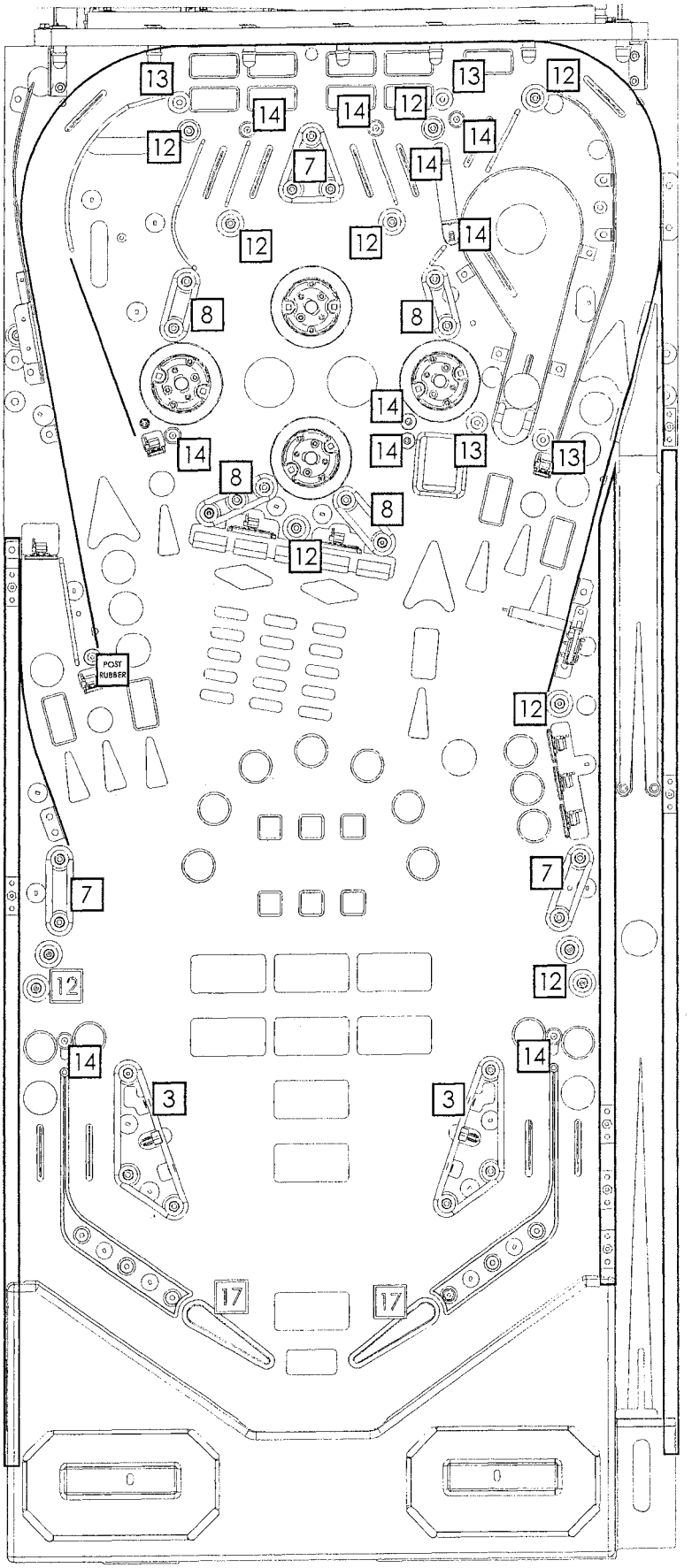

Playfield - Metal Posts & Fin Shank Screws (Actual Size) †

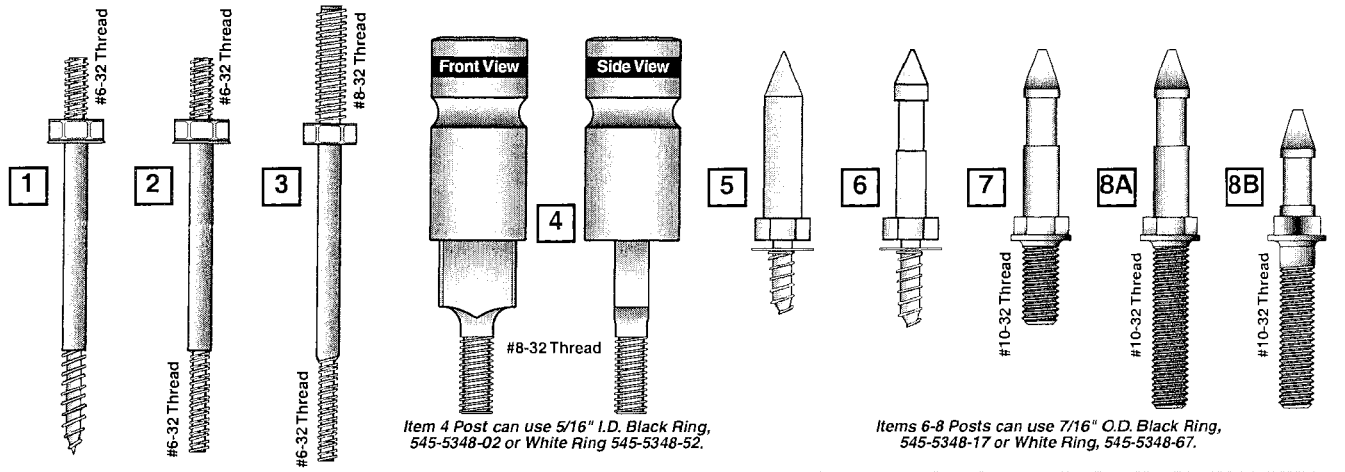

Item 4 Post can use 5/16" I.D. Black Ring, 545-5348-02 or White Ring 545-5348-52.

Items 6-8 Posts can use 7/16" O.D. Black Ring, 545-5348-17 or White Ring, 545-5348-67.

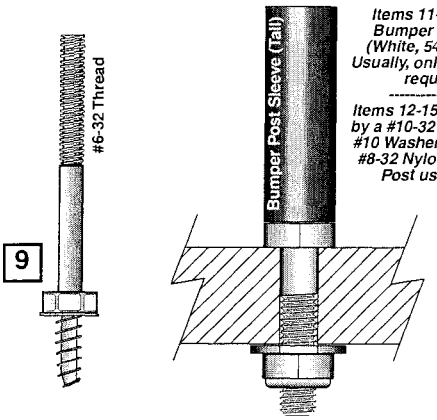

Items 11-16 & 18 Posts can use a Black Bumper Post Sleeve (Tall), 545-5308-00 (White, 545-5308-08 or Red, 545-5308-22) Usually, only Posts which are in the ball path require a Bumper Post Sleeve.

Items 12-15 & 18 Posts are typically secured by a #10-32 Nylon Stop Nut, 240-5203-00 and #10 Washer, 242-5010-00 (Item 11 Post use a #8-32 Nylon Stop Nut, 240-5102-00; Item 16 Post use a #8-32 T-Nut, 240-5101-00).

A & B ***Items A & B Note:*** *Typically used to secure Hex Spacers onto the Playfield Wood or Back Panel.*

C ***Item C Note:*** *Quantity 4 on bottom Cabinet Speaker Grill (Qty. 4) (also requires #6-32 Nylon Stop Nut, 240-5005-00).*

D ***Item D Note:*** *Quantity 3/per on the Coil Bracket Welded Assembly (515-5939-00) in the Bumper Bottom Assembly (515-6459-04).*

A - D ***Items A-D Note:*** *The "Fins" keep the screw from turning inside the wood hole.*

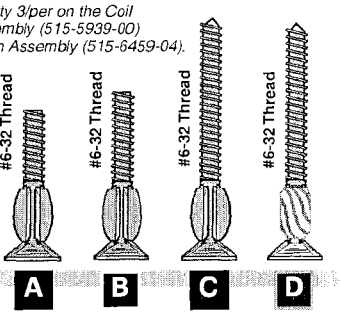

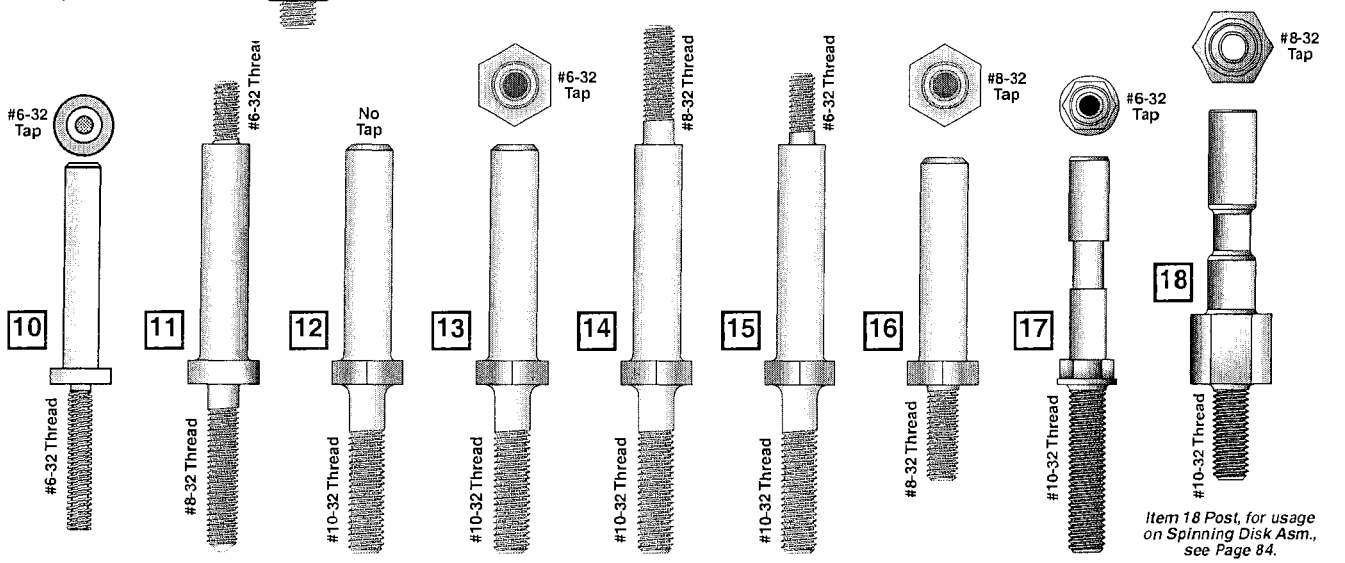

Item 18 Post, for usage on Spinning Disk Asm., see Page 84.

Parts Identification

Nr.	METAL POSTS	SPI PART Nr.
1	Post [Fasten] #6-32 Thread // Wood Screw	530-5010-02
2	Post [Fasten] #6-32 Thread // #6-32 Thread	530-5012-02
3	Post [Fasten] #8-32 Thread // #6-32 Thread	530-5008-00
4	Post Brass [Adjustable, Sliding] #8-32 Thread	530-5621-00
5	Mini-Post Wood Screw (no cut-away)	530-5004-01
6	Mini-Post Wood Screw	530-5004-00
7	Mini-Post Machine Scr. // #10-32 .4" Thread	530-5005-01
8A	Mini-Post MS // #10-32 .875" Thread	530-5005-00
8B	Mini-Post Short MS // #10-32 .875" Thread	530-5749-00
9	Post [Fasten] #6-32 Thread // Wood Screw	530-5263-01
10	Post #6-32 Tap // #6-32 Thread	530-5127-00
11	Post [Fasten] #6-32 Thread // #8-32 Thread	530-5007-00

Nr.	METAL POSTS	SPI PART Nr.
12	Post [Hex Base] NO TAP // 10-32 Thread	530-5332-00
13	Post [Hex Bs.] #6-32 TAP // #10-32 Thread	530-5332-01
14	Post [Hex Bs.] #8-32 Thread // #10-32 Thr.	530-5332-02
15	Post [Hex Bs.] #6-32 Thread // #10-32 Thr.	530-5332-03
16	Post [Hex Bs.] #8-32 TAP // #8-32 Thread	530-5332-04
17	Post [Hex Bs.+Groove] #6-32 TAP // #10-32 Thr.	530-5679-00
18	Post [Hex Bs.+Groove] #8-32 TAP // #10-32 Thr.	530-5753-00

Nr.	FIN SHANK SCREWS	SPI PART Nr.
A	#6-32 X 3/4" Fin Shank Screw	237-5921-02
B	#6-32 X 7/8" Fin Shank Screw	237-5921-04
C	#6-32 X 1¼" Fin Shank Screw	237-5883-00
D	#6-32 X 1 3/16" Spiral Fin Shank Screw	237-5957-00

NOT ALL PARTS LISTED ABOVE ARE USED ON THIS GAME (QUANTITIES PER GAME WILL DIFFER). COMPARE ACTUAL PART ON GAME TO ABOVE DRAWINGS TO IDENTIFY THE PART NUMBER REQUIRED.

Playfield - Nylon Stop, KEPS, Hex, T-, Flange, Pal* & Wing Nuts* (Actual Size) †

Nr.	NYLON STOP NUTS*	SPI PART Nr.
N1	#6-32 Nylon Stop Nut	240-5005-00
N2	#6-32 N.S. Nut *(with 1/4" Hex Body)*	240-5010-00
N3	#8-32 Nylon Stop Nut	240-5102-00
N4	#10-32 Nylon Stop Nut	240-5203-00
N5	#10-24 Nylon Stop Nut	240-5206-00
	*Item **N5** used with #10-24 X 1-3/4" Carriage Bolt Square Neck Black (231-5022-00) located in the Cabinet for the Roto Lock (Male) (355-5006-01).*	
N6	#4-40 Nylon Stop Nut	240-5303-00
N7	#4-40 *(18/8 Stainless)* Nylon Stop Nut	240-5303-01
N8	5/16"-18 Nylon Stop Nut	240-5316-00

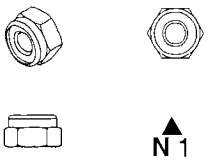

Nr.	KEPS NUTS*	SPI PART Nr.
K1	#6-32 Keps Nut *(with Star Washer)*	240-5008-00
K2	#6-32 Keps Nut *(with 1/4" Hex Body)*	240-5011-00
K3	#8-32 Keps Nut	240-5104-00
K4	#10-32 Keps Nut	240-5208-00
K5	#10-24 Keps Nut	240-5207-00
K6	#4-40 Keps Nut	240-5318-00

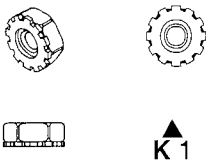

Nr.	HEX NUTS*	SPI PART Nr.
H1	#6-32 Hex Nut *(No Star Washer)*	240-5004-00
H2	#8-32 Hex Nut	240-5103-00
H3	#10-32 Hex Nut	240-5201-00
H4	#10-24 Hex Nut	240-5202-00
	*Item **H4** used with #10-24 X 1" Carriage Bolt Square Neck Black (231-5021-00) located in the Cabinet for the Side Armor Rear (towards Backbox).*	
H5	#10-32 X 3/8" Hex Nut	240-5209-00
H6	3/4-16 Hex Nut	240-5315-00
H7	#2-56 Hex Nut	240-5301-00
H8	7/8"-14 Hex Nut	240-5317-00

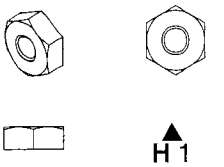

Nr.	T-NUTS*	SPI PART Nr.
T1	#6-32 T-Nut	240-5002-00
T2	#6-32 T-Nut *(with Side Cut Off)*	240-5002-01
T3	#8-32 T-Nut	240-5101-00
T4	#10-32 *(Black Oxide)* T-Nut	240-5007-00
T5	#10-32 T-Nut *(with Side Cut Off)*	240-5205-00
T6	#10-32 X 5/16" 3-Prong T-Nut	240-5204-00
T7	#10-24 T-Nut	240-5200-00

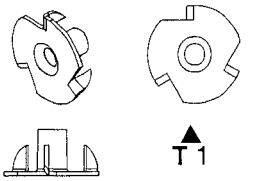

Nr.	FLANGE NUT*	SPI PART Nr.
F1	1/4" X 20 Flange Nut	240-5300-00
	*Item **F1** used with 1/4-20 X 1-1/4 Sq. Neck Carriage Bolt Black (231-5003-00) located in the Cabinet for the Side Armor (Front) and Pivot Hinges.*	

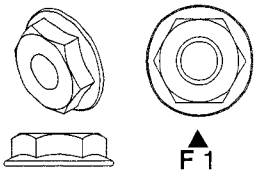

Nr.	PAL NUTS*	SPI PART Nr.
P1	Plastic Pal Nut *(on Flipper Buttons)*	240-5003-00
P2	Metal Pal Nut *(on Flipper Buttons)*	240-5003-01

* *Not Shown*

Nr.	WING NUTS*	SPI PART Nr.
W1	#6-32 Wing Nut	240-5001-00
W2	#8-32 Wing Nut	240-5100-00
W3	#10-24 Wing Nut	240-5211-00
W4	1/4"-20 Wing Nut	240-5302-00
W5	1/4"-20 Toggle Wing	240-5324-00

* *Not Shown*

NOT ALL PARTS LISTED ABOVE ARE USED ON THIS GAME (QUANTITIES PER GAME WILL DIFFER). COMPARE ACTUAL PART ON GAME TO ABOVE DRAWINGS TO IDENTIFY THE PART NUMBER REQUIRED.

Playfield Top - Hex Spacers (Actual Size) †

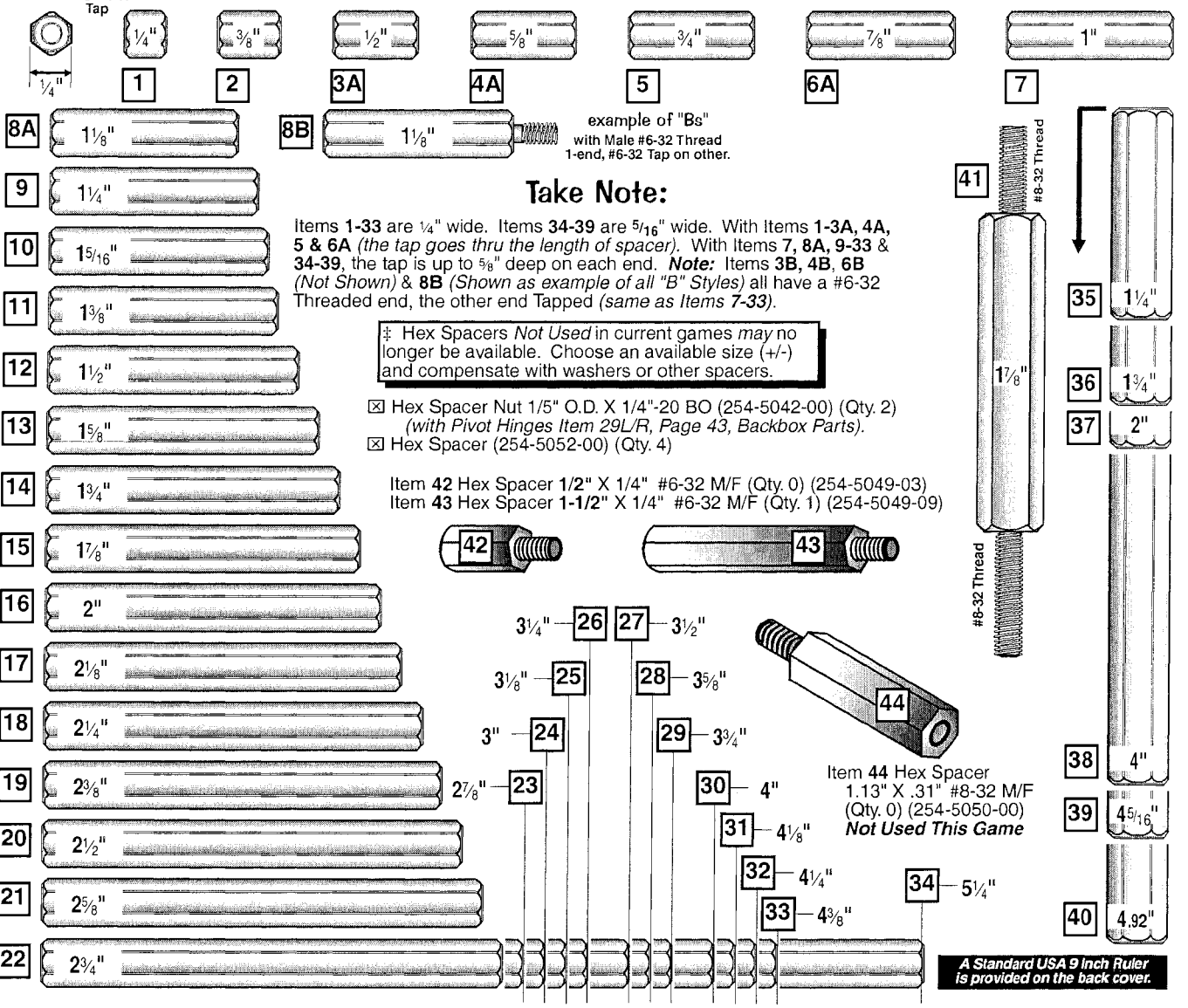

Take Note:

Items **1-33** are 1/4" wide. Items **34-39** are 5/16" wide. With Items **1-3A, 4A, 5 & 6A** *(the tap goes thru the length of spacer)*. With Items **7, 8A, 9-33** & **34-39**, the tap is up to 5/8" deep on each end. ***Note:*** Items **3B, 4B, 6B** *(Not Shown)* & **8B** *(Shown as example of all "B" Styles)* all have a #6-32 Threaded end, the other end Tapped *(same as Items 7-33)*.

‡ Hex Spacers *Not Used* in current games *may* no longer be available. Choose an available size (+/-) and compensate with washers or other spacers.

☒ Hex Spacer Nut 1/5" O.D. X 1/4"-20 BO (254-5042-00) (Qty. 2) *(with Pivot Hinges Item 29L/R, Page 43, Backbox Parts).*
☒ Hex Spacer (254-5052-00) (Qty. 4)

Item **42** Hex Spacer **1/2"** X 1/4" #6-32 M/F (Qty. 0) (254-5049-03)
Item **43** Hex Spacer **1-1/2"** X 1/4" #6-32 M/F (Qty. 1) (254-5049-09)

Item **44** Hex Spacer 1.13" X .31" #8-32 M/F (Qty. 0) (254-5050-00) ***Not Used This Game***

A Standard USA 9 Inch Ruler is provided on the back cover.

Nr.	HEX SPACERS	SPI PART Nr.	Nr.	HEX SPACERS	SPI PART Nr.
1	1/4" X 1/4" : #6-32 Tap *(both ends)*	254-5008-00	19	2 3/8" X 1/4" : #6-32 Tap *(both ends)*	254-5008-28
2	3/8" X 1/4" : #6-32 Tap *(both ends)*	254-5008-12	20	2 1/2" X 1/4" : #6-32 Tap *(both ends)*	254-5008-16
3A	1/2" X 1/4" : #6-32 Tap *(both ends)*	254-5008-03	21	2 5/8" X 1/4" : #6-32 Tap *(both ends)*	254-5008-08
3B*	Identical to **3A** *with #6-32 Thread end*	254-5024-03	22	2 3/4" X 1/4" : #6-32 Tap *(both ends)*	254-5008-15
4A	5/8" X 1/4" : #6-32 Tap *(both ends)*	254-5008-02	23	2 7/8" X 1/4" : #6-32 Tap *(both ends)*	254-5008-31
4B*	Identical to **4A** *with #6-32 Thread end*	254-5024-02	24	3" X 1/4" : #6-32 Tap *(both ends)*	254-5008-14
5	3/4" X 1/4" : #6-32 Tap *(both ends)*	254-5008-04	25	3 1/8" X 1/4" : #6-32 Tap *(both ends)*	254-5008-19
6A	7/8" X 1/4" : #6-32 Tap *(both ends)*	254-5008-05	26	3 1/4" X 1/4" : #6-32 Tap *(both ends)*	254-5008-26
6B*	Identical to **6A** *with #6-32 Thread end*	254-5024-05	27	3 1/2" X 1/4" : #6-32 Tap *(both ends)*	254-5008-27
7	1" X 1/4" : #6-32 Tap *(both ends)*	254-5008-06	28	3 5/8" X 1/4" : #6-32 Tap *(both ends)*	254-5008-25
8A	1 1/8" X 1/4" : #6-32 Tap *(both ends)*	254-5008-17	29	3 3/4" X 1/4" : #6-32 Tap *(both ends)*	254-5008-36
8B	Identical to **8A** *with #6-32 Thread end*	254-5024-17	30	4" X 1/4" : #6-32 Tap *(both ends)*	254-5008-21
9	1 1/4" X 1/4" : #6-32 Tap *(both ends)*	254-5008-11	31	4 1/8" X 1/4" : #6-32 Tap *(both ends)*	254-5008-23
10	1 5/16" X 1/4" : #6-32 Tap *(both ends)*	254-5008-34	32	4 1/4" X 1/4" : #6-32 Tap *(both ends)*	254-5008-30
11 ‡	1 3/8" X 1/4" : #6-32 Tap *(both ends)*	254-5008-33	33	4 3/8" X 1/4" : #6-32 Tap *(both ends)*	254-5008-29
12	1 1/2" X 1/4" : #6-32 Tap *(both ends)*	254-5008-09	34	5 1/4" X 1/4" : #6-32 Tap *(both ends)*	254-5008-35
13 ‡	1 5/8" X 1/4" : #6-32 Tap *(both ends)*	254-5008-13	35	1 1/4" X 5/16" : #6-32 Tap *(both ends)*	254-5018-09
14	1 3/4" X 1/4" : #6-32 Tap *(both ends)*	254-5008-10	36	1 3/4" X 5/16" : #6-32 Tap *(both ends)*	254-5018-06
15 ‡	1 7/8" X 1/4" : #6-32 Tap *(both ends)*	254-5008-20	37	2" X 5/16" : #6-32 Tap *(both ends)*	254-5018-07
16	2" X 1/4" : #6-32 Tap *(both ends)*	254-5008-07	38	4" X 5/16" : #6-32 Tap *(both ends)*	254-5018-03
17	2 1/8" X 1/4" : #6-32 Tap *(both ends)*	254-5008-32	39	4 5/16" X 5/16" : #6-32 Tap *(both ends)*	254-5018-00
18	2 1/4" X 1/4" : #6-32 Tap *(both ends)*	254-5008-18	40	4.92" X 5/16" : #6-32 Tap *(both ends)*	254-5018-04

NOT ALL PARTS LISTED ABOVE ARE USED ON THIS GAME (QUANTITIES PER GAME WILL DIFFER). COMPARE ACTUAL PART ON GAME TO ABOVE DRAWINGS TO IDENTIFY THE PART NUMBER REQUIRED.

Playfield Top - Plastic Posts & Spacers & Metal Spacers (Actual Size) †

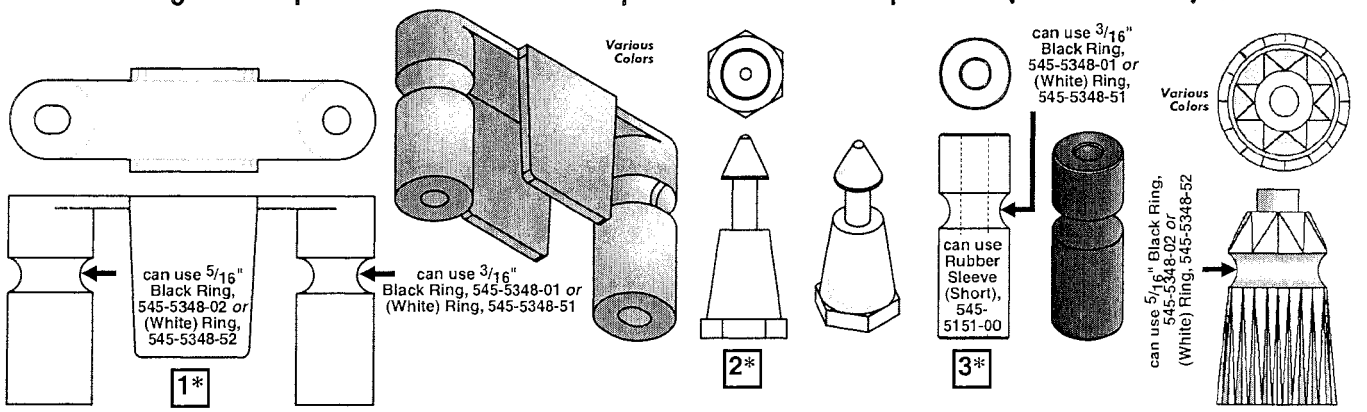

PLASTIC PART COLOR CHART

Nr.	Color	Nr.	Color	Nr.	Color
-00	Black	-06	Yellow	-12	Fluor. Blue
-01	Clear	-07	Orange	-13	Teal Green
-02	Red	-08	(White)	-14	(Gray)
-03	Amber	-09	Purple	-15	Luminescent
-04	Green	-10	Fluor. Org.	-16	Gold
-05	Blue	-11	Fluor. Green		

* Items **1 & 5** come in various colors. *The "**-XX**" (the last 2-Digits in the Part Number)*, should be replaced with the desired 2-Digit number from the above Color Chart *(may not be available in every color; other colors used in prior games may no longer be available.) Call for availability.*

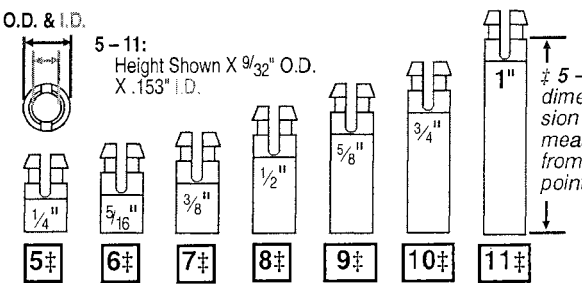

‡ *Items **5** through **11** dimensions are measured from bottom to just under the cut-away. Item **33** dimension is measured from top-to-top of curve. See pictorials with Items **11** & **33**.*

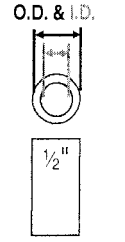

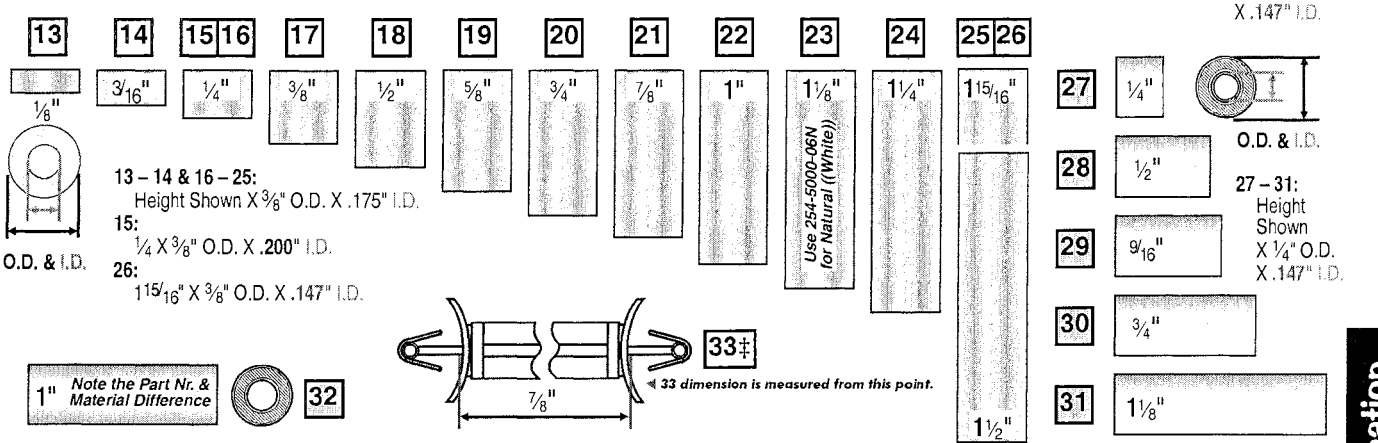

Nr.	PLASTIC POSTS & SPACERS	SPI PART Nr.
1**	Top Lane Plastic Mini-Lite Hood (XX-Color)	550-5061-XX
2**	Mini-Jewel Plastic Post (XX-Color)	550-5052-XX
3**	1 1/16" 1-Groove Plastic Post (XX-Color)	550-5059-XX
	***Item 3 Only :** Use Part Number (550-5059-00) for color **Black**.*	
4**	1-Groove Jewel Plastic Post (XX-Color)	550-5034-XX
	Items 3 & 4 typically sec'd by: Post Fastening Scr. #6-32 Top / #6-32 Bot. (530-5012-02). ***Use Color Chart above for last 2-digits. Not all colors are available.***	
	Items 1–4 Note: Use Color Chart above for last 2-digits. Not all colors are available.	
5 ‡	1/4" Self Retain. Plastic Spacer (White)	254-5007-02
6 ‡	9/16" Self Retain. Plastic Spacer (White)	254-5007-05
7 ‡	3/8" Self Retain. Plastic Spacer (White)	254-5007-01
8 ‡	1/2" Self Retain. Plastic Spacer (White)	254-5007-04
9 ‡	5/8" Self Retain. Plastic Spacer (White)	254-5007-00
10 ‡	3/4" Self Retain. Plastic Spacer (White)	254-5007-03
11 ‡	1" Self Retain. Plastic Spacer (White)	254-5007-06
12	1/2" X 1/4" O.D. X .147" I.D. Pls. Spacer (White)	254-5000-03
13	1/8" X 3/8" O.D. X .175" I.D. Pls. Spacer (Gray)	254-5000-19
14	3/16" X 3/8" O.D. X .175" I.D. Pls. Spcr. (Gray)	254-5000-18
15	1/4" X 3/8" O.D. X **.200"** I.D. Pls. Spcr. (Gray)	254-5000-02
16	1/4" X 3/8" O.D. X .175" I.D. Pls. Spacer (Gray)	254-5000-09
17	3/8" X 3/8" O.D. X .175" I.D. Pls. Spacer (Gray)	254-5000-12
18	1/2" X 3/8" O.D. X .175" I.D. Pls. Spacer (Gray)	254-5000-01
19	5/8" X 3/8" O.D. X .175" I.D. Pls. Spacer (Gray)	254-5000-14
20	3/4" X 3/8" O.D. X .175" I.D. Pls. Spacer (Gray)	254-5000-07

Nr.	PLASTIC POSTS & SPACERS	SPI PART Nr.
21	7/8" X 3/8" O.D. X .175" I.D. Pls. Spacer (Gray)	254-5000-11
22	1" X 3/8" O.D. X .175" I.D. Pls. Spacer (Gray)	254-5000-04
23	1 1/8" X 3/8" O.D. X .175" I.D. Pls. Spcr. (Gray)	254-5000-06
	***Item 23 Only :** Add the letter " **N** " for color Natural (if available) or " **B** " for color Black.*	
24	1 1/4" X 3/8" O.D. X .175" I.D. Pls. Spcr. (Gray)	254-5000-05
25	1 1/2" X 3/8" O.D. X .175" I.D. Pls. Spcr. (Gray)	254-5000-08
26	1 15/16" X 3/8" O.D. X .147" I.D. Plastic Spacer (Gray)	254-5000-15
	***Items 13-26 Only :** Spacers may also be Black in color (random from vendor).*	
	Not Shown and listed for reference only : 254-5000-10: 2 1/2" X 3/8" O.D. X .175" I.D. -13: 5/16" X 1/4" X .147"; -16: 5/16" X 5/16" X .190"; -17: 1 3/4" X 3/8" O.D. X .175" I.D.	
27	1/4" X 5/16" O.D. X .144" I.D. Metal Spacer	254-5014-03
28	1/2" X 5/16" O.D. X .144" I.D. Metal Spacer	254-5014-00
29	9/16" X 5/16" O.D. X .144" I.D. Metal Spacer	254-5014-04
30	3/4" X 5/16" O.D. X .144" I.D. Metal Spacer	254-5014-01
31	1 1/8" X 5/16" O.D. X .144" I.D. Metal Spacer	254-5014-02
32	1" X 5/16" O.D. X .144" I.D. Metal Spacer	254-5001-00
33‡	7/8" Plastic Spacer Support *(Dual-Locking)*	254-5039-14
34	Plastic Spacer, .5" Plastic Mounting	254-5054-00
35	Plastic Spacer, 1.13" Plastic Mounting	254-5054-01

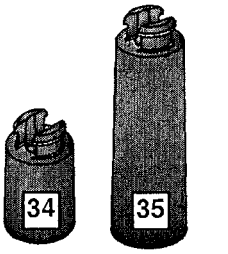

NOT ALL PARTS LISTED ABOVE ARE USED ON THIS GAME (QUANTITIES PER GAME WILL DIFFER). COMPARE ACTUAL PART ON GAME TO ABOVE DRAWINGS TO IDENTIFY THE P/N REQUIRED.

Playfield Top & Bottom - Small Bayonet Sockets & Bulbs ■ (Actual Size) †

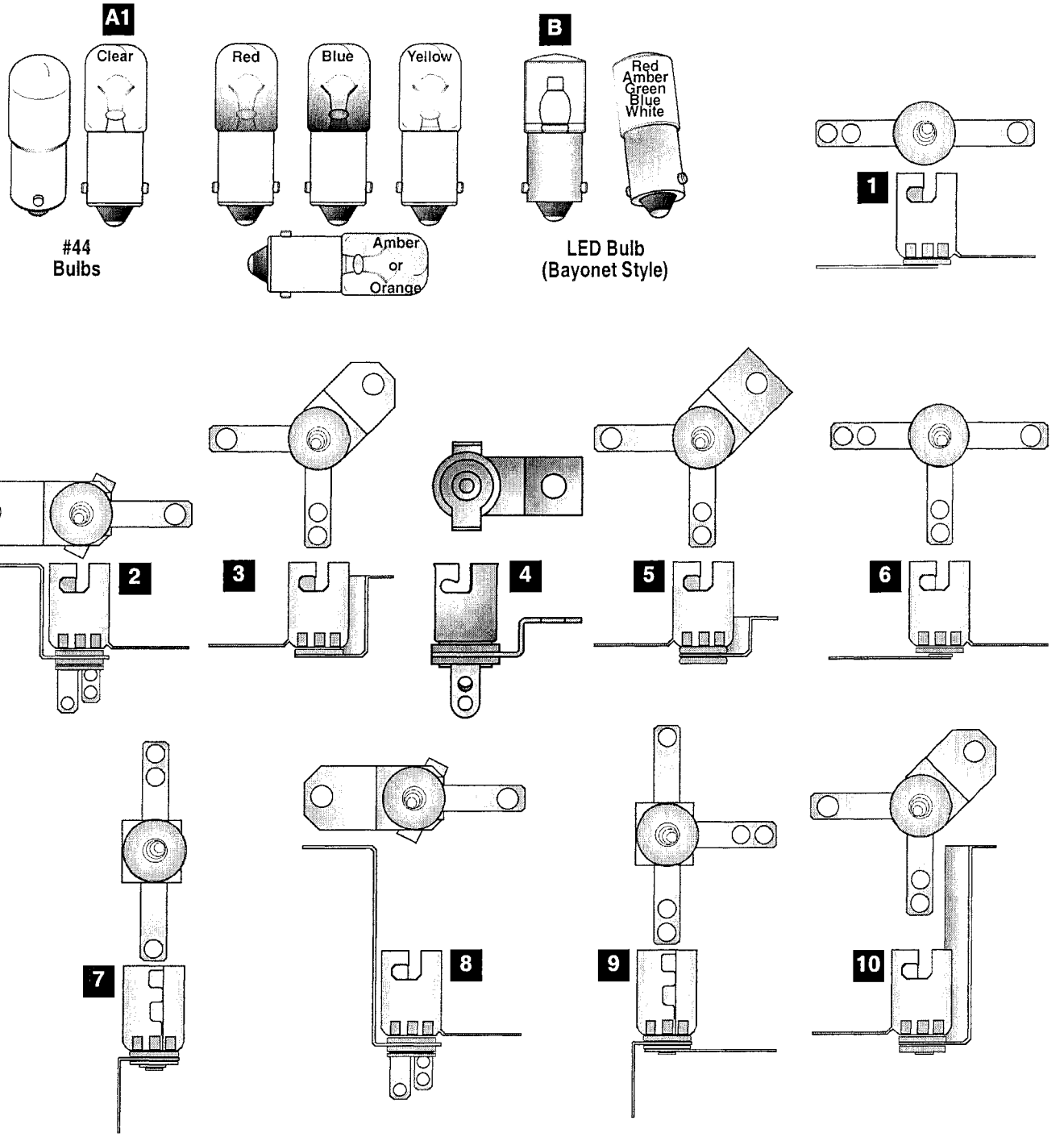

Nr.	BULBS (#44)	SPI PART Nr.
A	#44 Bulb (Clear) *Heavy Filament*	165-5000-44-HF
	#44 Bulb *(replace -XX w/color below)*	165-5053-XX-HF

Item A Note: Amber (165-5053-03-HF); Green (165-5053-04-HF); Yellow (165-5053-06-HF); Red (165-5053-02-HF); Blue (165-5053-05-HF); Orange (165-5053-07-HF)

Nr.	BULBS (LED & #455)	SPI PART Nr.
B	LED Module (WHT) (12.8v 20-25mA) Bynt.	112-5023-08

Item B Note: *Different Colors may be available ~*
Red (112-5023-02); Amber (112-5023-03); Green (112-5023-04); Blue (112-5023-05);

Nr.	SMALL BAYONET SOCKETS	SPI PART Nr.
1	2-Lug Staple Down Socket	077-5000-00
2	3-Lug Stand-Up Socket (Med. Brkt.)	077-5008-00
3	2-Lug Stand-Up Socket (Med. Brkt.)	077-5002-00
4	2-Lug Stand-Up Socket (Short Brkt.)	077-5223-00
5	2-Lug Stand-Up Sckt. (Short Bracket)	077-5002-31
6	3-Lug Staple Down Socket	077-5001-00
7	2-Lug Laydown Socket	077-5003-00
8	3-Lug Stand-Up Socket (Tall Bracket)	077-5009-00

Nr.	SMALL BAYONET SOCKETS	SPI PART Nr.
9	3-Lug Laydown Socket (3 Lugs Flat)	077-5006-00
10	2-Lug Stand-Up Socket (Tall Bracket)	077-5005-00
11	3-Lug Stand-Up Long Shell Socket	077-5013-00
12	2-Lug Stand-Up Lg. Shell Socket (Gls)	077-5031-00
13	1-Lug S-U Lg. Shell Sckt. (Med. Brkt.)	077-5012-00
14	3-Lug S-U Lg. Shell Sckt. (45° Brkt.)	077-5035-00
15	3-Lug Laydown Socket (2 Lugs Bent)	077-5032-00

NOT ALL PARTS LISTED ABOVE ARE USED ON THIS GAME (QUANTITIES PER GAME WILL DIFFER). COMPARE ACTUAL PART ON GAME TO ABOVE DRAWINGS TO IDENTIFY THE PART NUMBER REQUIRED.

Playfield Top & Bot. - Small Bayonet Sockets & Bulbs ■ (Actual Size) † Continued

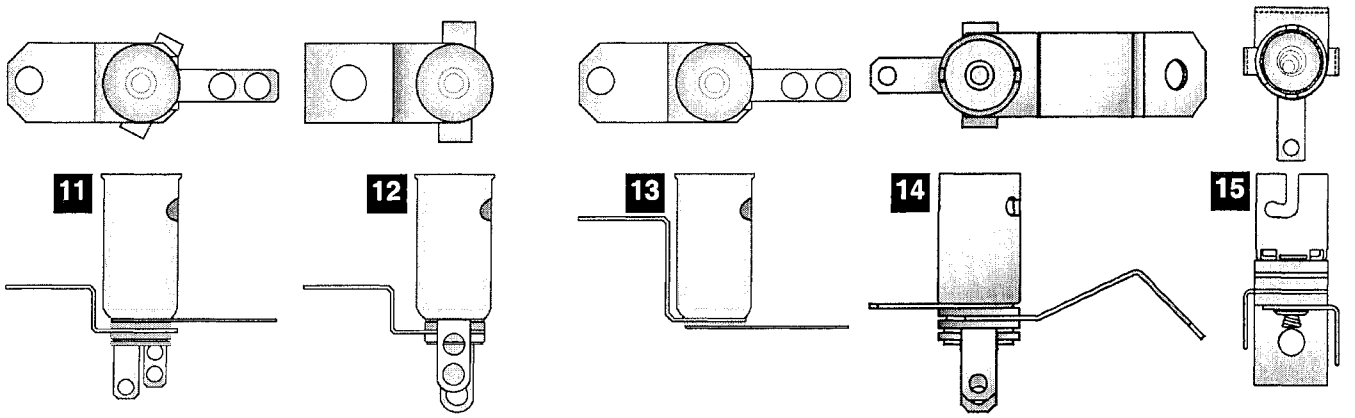

Playfield Bottom - Large Bayonet Sockets & Bulbs ■ (Actual Size) †

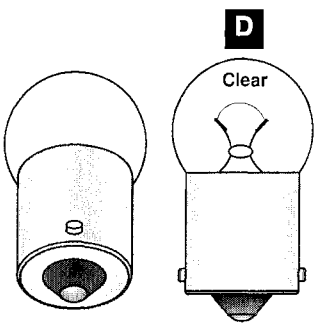

#89
Bulb

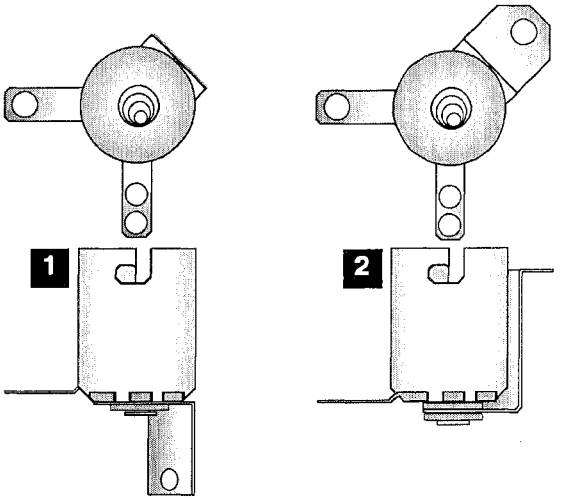

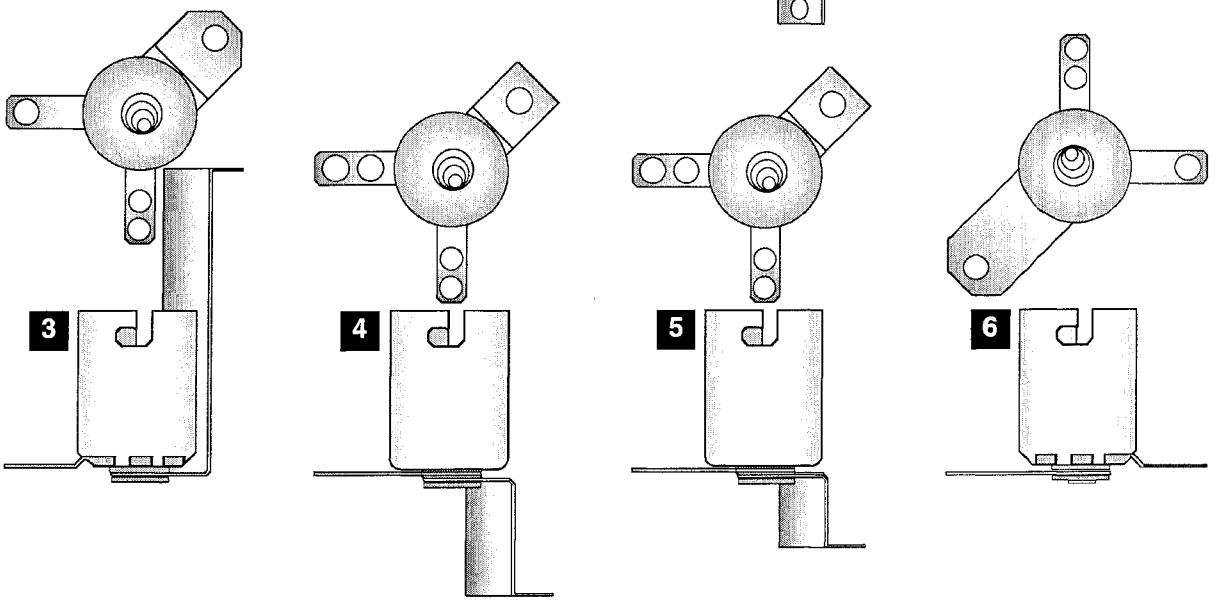

Nr.	BULBS (#89)	SPI PART Nr.
D	#89 Bulb *Heavy Filament*	165-5000-89-HF

Nr.		
1	2-Lug Laydown Standard Socket	077-5100-00
2	2-Lug Stand-Up Short Socket	077-5101-00
3	2-Lug Stand-Up Long Socket	077-5102-00
4	2-Lug Stand-Up Rev. Mount Socket	077-5103-00
5	2-Lug Stand-Up Rv. Mnt. Short Socket	077-5106-00
6	2-Lug Straight Leg Socket	077-5107-00

Nr.	LARGE BAYONET SOCKETS	SPI PART Nr.

NOT ALL PARTS LISTED ABOVE ARE USED ON THIS GAME (QUANTITIES PER GAME WILL DIFFER). COMPARE ACTUAL PART ON GAME TO ABOVE DRAWINGS TO IDENTIFY THE PART NUMBER REQUIRED.

Playfield Top & Bottom - Wedge Base Sockets & Bulbs ■ (Actual Size) †

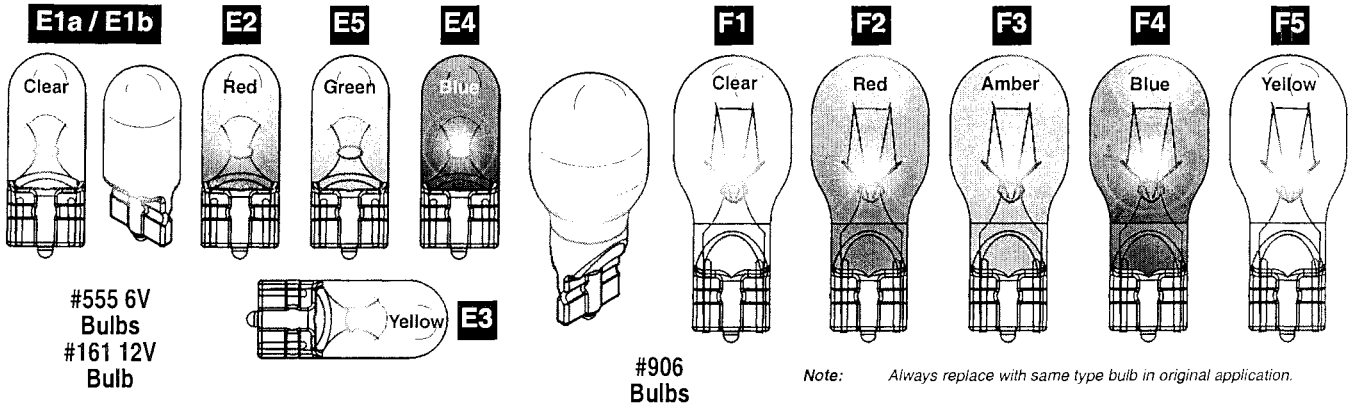

Note: *Always replace with same type bulb in original application.*

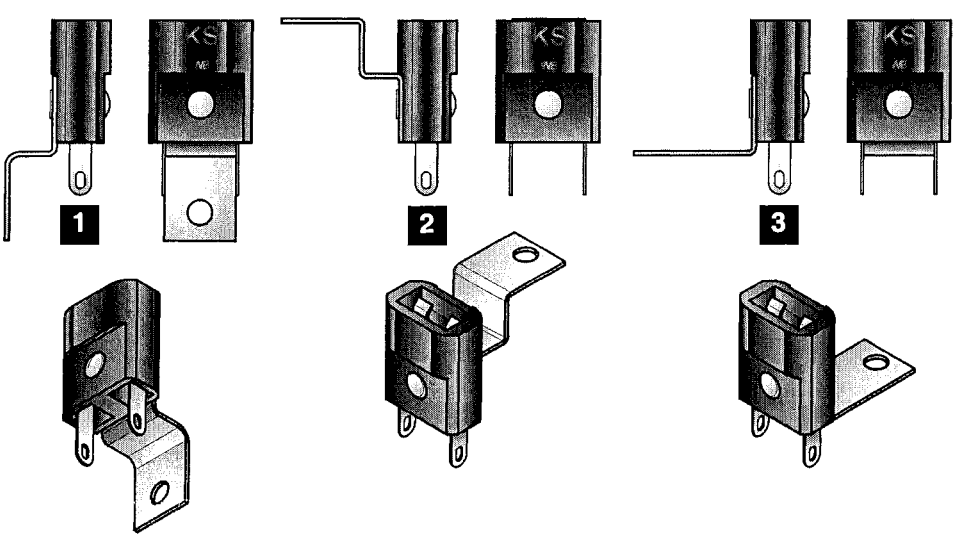

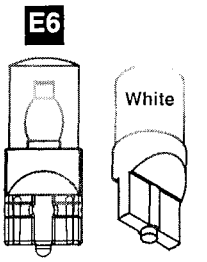

LED Bulb (Wedge Base)

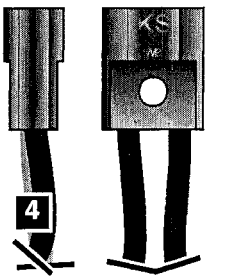

Item 4 Socket does not require brackets. Old stock may include "L" style brackets (each side); do not secure to assembly. ***Black Wires (Qty. 2) are 12" each.***

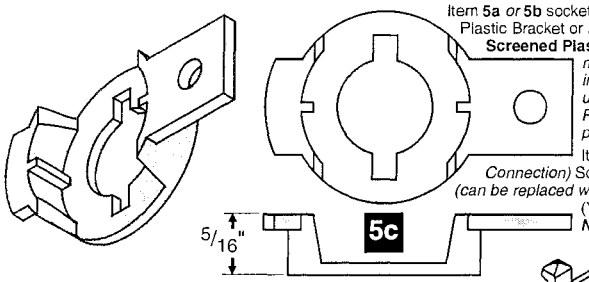

Item **5a** *or* **5b** sockets are secured to the playfield or assembly by Item **5c** Plastic Bracket or *may* also be snapped into specially cut **Clear and / or Screened Plastic Pieces** *or* **Metal Brackets** *(used for multiple mounting of sockets when positioned closely together or in tight areas). If Plastic Pieces or Metal Brackets are used to mount Item* ***5a*** *or* ***5b*** *Sockets, it will be noted on* ***Playfield Bottom - Miscellaneous Parts and Brackets,*** *page earlier in this Chapter.*

Item **5a** is a solderless **IDC** *(Insulation Displacement Connection)* Socket with a built-in Diode, 1N4003 (112-5003-00) *(can be replaced with 1N4001 Diode, 112-5001-00).* Item **5b** Socket (Yellow) is identical to **5a** (Socket) *except* it does ***NOT REQUIRE*** a diode *(Flash Lamp usage).*

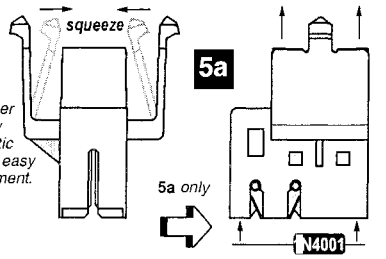

Just squeeze the "side arms" of the socket together and pull away from the plastic or bracket for easy Bulb replacement.

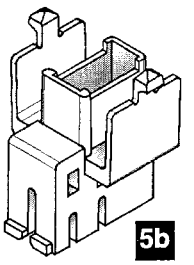

5b *is Yellow with* ***No Diode***

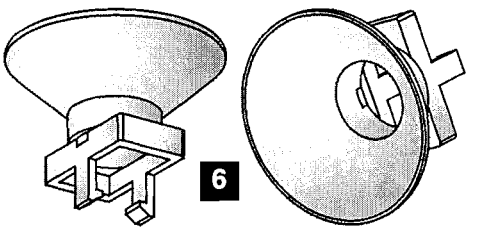

Nr.	BULBS (#555)	SPI PART Nr.
E1a	#555 Wedge Base Bulb (Clear)	165-5002-00
E2-E5	#555 Wedge Base Bulb (Multi-Color)	165-5054-XX
	Item E2-E5 Bulb Note: *Different Colors available (not used in this game) ~* **Red (165-5054-02); Green (165-5054-04); Blue (165-5054-05); Yellow (165-5054-06);**	
E1b	#161 12V Wedge Base Bulb (Clear)	165-5032-00

Nr.	BULBS (LED & #906)	SPI PART Nr.
E6	LED Module (WHT) **(5v - 6.3v) Wedge Base**	112-5024-08
	Item E6 Bulb Note : *Typically used with Item 4 Socket in Pop Bumpers.*	
F	#906 Wedge Base Bulb (Clear)	165-5004-00
	Item F Note: *Different Colors available (not used in this game) ~* **Red (165-5004-02); Amber (165-5004-03); Blue (165-5004-05); Yellow (165-5004-06)**	

Nr.	WEDGE BASE SOCKETS	SPI PART Nr.
1	Wedge Base Socket (Laydown)	077-5026-01
2	Wedge Base Socket (Offset)	077-5029-00
3	Wedge Base Socket (Laydown GI)	077-5030-00
4	W.B. Socket (Bumpers/Special App.)	077-5206-00

Nr.	WEDGE BASE SOCKETS	SPI PART Nr.
5a	IDC Snap-On Socket (Biege)	077-5216-00
5b	IDC Snap-On Socket ***No Diode*** (Yel.)	077-5216-**01**
5c	$^{5}/_{16}$" Ht. Bracket (White)	545-5760-18
6	Light Reflector (Silver Plst.) REF540N	545-5409-01
	Note Item 6 : *Typically used with Item 1 (but will fit on any similiar Wedge Base Socket).*	

NOT ALL PARTS LISTED ABOVE ARE USED ON THIS GAME (QUANTITIES PER GAME WILL DIFFER). COMPARE ACTUAL PART ON GAME TO ABOVE DRAWINGS TO IDENTIFY THE PART NUMBER REQUIRED.

Optional Kits available through your Distributor:

Flipper Rebuild Kit (Left) 500-6307-10

Flipper Base Plate Kit (Left) 515-6617-01

Kit includes: *Flipper Base Plate (Left) pre-threaded with securing hardware; see the Flipper Drawing for view.*

Flipper Rebuild Kit (Right) 500-6307-00

Flipper Base Plate Kit (Right) 515-6617-00

Kit includes: *Flipper Base Plate (Left) pre-threaded with securing hardware; see the Flipper Drawing for view.*

Pinball Location Maintenance Standard Kit (for MUSTANG LE Pinball) 502-6002-F2

Standard Kit includes : *8 oz. Novus Wax #2 Fine (Red) (**675-0003-01**), Cloth, Rubber Rings (used above playfield), Bulbs (Bulb quantities vary and is limited to 25 per type), Fuses (1/per type) and 4 Pinballs.* ***Note:*** *Quanties, sizes and contents subject to change without notice.*

Pinball Location Maintenance Deluxe Kit (for MUSTANG LE Pinball) 502-6003-F2

Deluxe Kit includes : *Pinball Location Maintenance Standard Kit as described above plus a quantity of Flipper Rebuild Kits.* ***Note:*** *Quantity varies which equals the same quantity of flippers used in this game.*

▲ THIS GAME KIT INCLUDES (2) FLIPPER REBUILD KITS ▲

Plastic*Kit (for MUSTANG PRO Pinball).....803-5000-F1

Plastic Kit includes: Plastic Sets (830-6928-XX,830-6940-XX)

Plastics*Kit (for MUSTANG L,Pre. Pinball) 803-5000-F2

Plastics Kit includes: *Plastic Set (830-6941-XX,830-6942-XX)*

Decals* Kit (for MUSTANG PRO Pinball).....802-5000-F1

Decals Kit includes: Decal Set (820-7917-XX)

Decals*Kit (for MUSTANG LE,PRE Pinball) 802-5000-F2

Decals Kit includes: *Decal Set (820-7917-XX,820-7920-XX)*

****Attention:*** *No individual Plastic or Decal can be ordered separately, unless noted otherwise. Plastics & Decals are subject to change without notice during and / or after production. Key Fobs subject to availability and may or may not be included in the plastic set. All designs, shapes & pieces used subject to change without notice. Kit contents subject to change. Service Bulletin(s) will announce any critical changes, if warranted. The last 2-digits shown on plastics or decals are for reference only.*

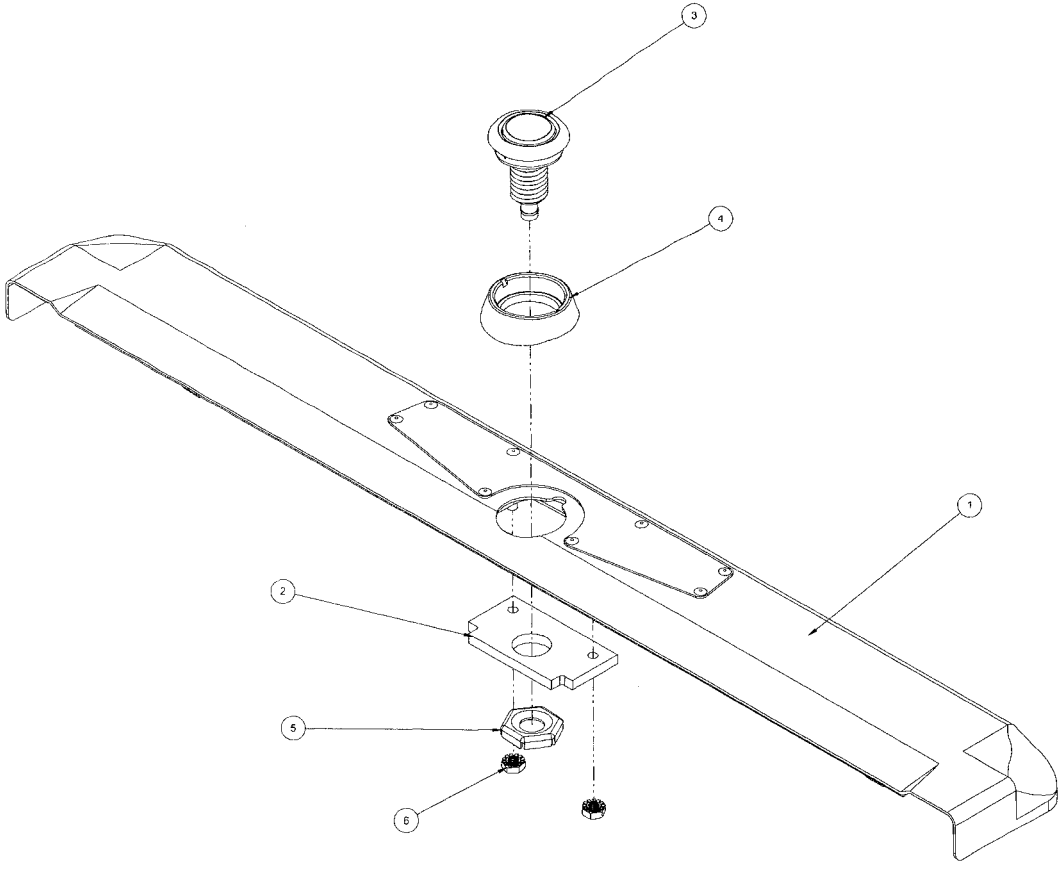

ITEM #	QTY	PART #	DESCRIPTION
1	1	500-7283-75	FRONT MOLD ASSEMBLY - LOCKDOWN - CENTER BUTTON
2	1	545-7291-00	TOP BUTTON BAR
3	1	515-7791-00	BUTTON ASSY - CLEAR
4	1	545-7292-10	TOP BUTTON SPACER-MOLDED
5	1	240-5003-01	PAL NUT
6	2	240-5104-00	8-32 KEPS NUT

FRT MOLD FINAL ASSY - LOCKDOWN - CENTER BUTTON

STAR TREK L E

500-9838-75

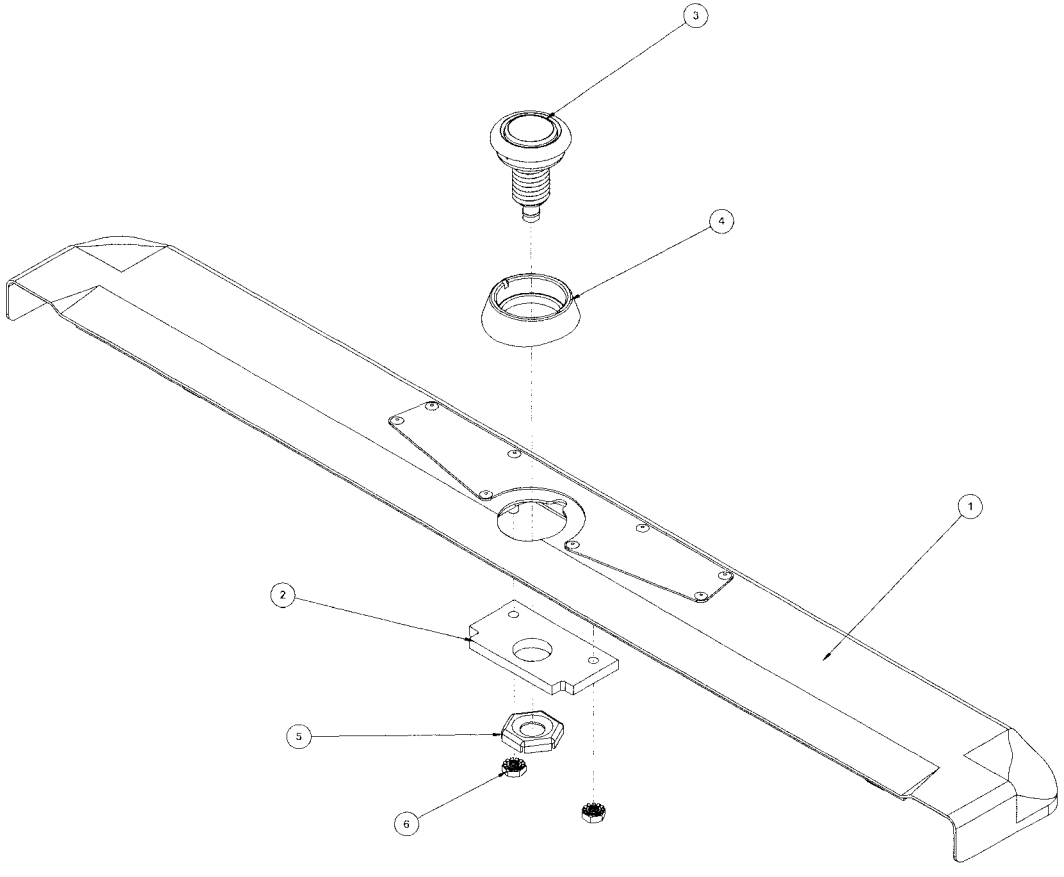

ITEM #	QTY	PART #	DESCRIPTION
1	1	500-7283-00	FRONT MOLD ASSEMBLY - LOCKDOWN - CENTER BUTTON
2	1	545-7291-00	TOP BUTTON BAR
3	1	515-7791-00	BUTTON ASSY - CLEAR
4	1	545-7292-10	TOP BUTTON SPACER-MOLDED
5	1	240-5003-01	PAL NUT
6	2	240-5104-00	8-32 KEPS NUT

FRT MOLD FINAL ASSY - LOCKDOWN - CENTER BUTTON
STAR TREK PREMIUM
500-9838-00

Ball Shooter (Plunger) Assembly, 500-6146-00-07 (Items 1-6)

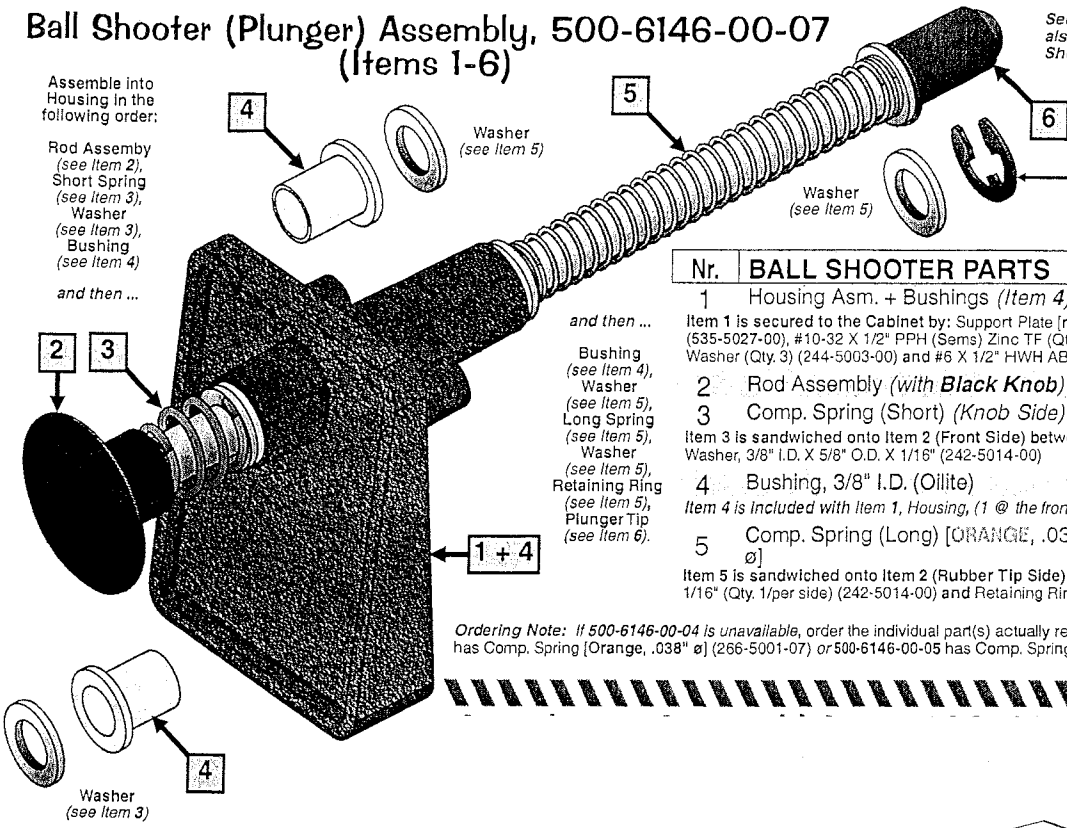

Securing Hardware for Items 3 & 5 are also shown separated from the Ball Shooter (Plunger) Assembly for clarity.

Nr.	BALL SHOOTER PARTS	QTY.	SPI PART Nr.
1	Housing Asm. + Bushings *(Item 4)*	1	535-5067-02
	Item 1 is secured to the Cabinet by: Support Plate [not included with Item 1 *or* Assembly] (535-5027-00), #10-32 X 1/2" PPH (Sems) Zinc TF (Qty. 3) (237-6033-00), #10 Split Lock Washer (Qty. 3) (244-5003-00) and #6 X 1/2" HWH AB (Zinc) Red (Qty. 2) (234-5001-02)		
2	Rod Assembly *(with **Black Knob**)*	1	515-6557-00
3	Comp. Spring (Short) *(Knob Side)*	1	266-5010-00
	Item 3 is sandwiched onto Item 2 (Front Side) between the knob and by: Washer, 3/8" I.D. X 5/8" O.D. X 1/16" (242-5014-00)		
4	Bushing, 3/8" I.D. (Oilite)	2	280-5010-00
	Item 4 is included with Item 1, Housing, (1 @ the front; 1 @ the back) ***as shown.***		
5	Comp. Spring (Long) [ORANGE, .035" ø]	1	266-5001-04
	Item 5 is sandwiched onto Item 2 (Rubber Tip Side) by: Washer, 3/8" I.D. X 5/8" O.D. X 1/16" (Qty. 1/per side) (242-5014-00) **and** Retaining Ring, 3/8" ø Shaft (270-5012-00)		

*Ordering Note: If **500-6146-00-04** is unavailable,* order the individual part(s) actually required. ... Identical to 500-6146-00-07 has Comp. Spring [Orange, .038" ø] (266-5001-07) *or* 500-6146-00-05 has Comp. Spring [Blue, .031" ø] (266-5001-05).

ITEM NO.	QTY.	PART NUMBER	DESCRIPTION
1	1	515-9689-00	MAIN BRKT: AUTO-PLUNGER
2	1	535-0728-00	KICKER ARM, AUTO-PLUNGER
3	1	270-5001-00	RETAINING E-RING, 3/16" SHAFT OD
4	1	545-5352-00	NYLINER, 3/16" SHAFT
5	1	090-5001-ND	COIL - 23-800, NO DIODE
6	1	545-5411-00	COIL SLEEVE
7	1	266-5020-00	COMPRESSION SPRING-CONICAL
8	1	530-7834-00	PIN: KICKER ARM, AUTO-PLUNGER
9	4	232-5300-00	SCREW, 8-32 X 1/4" PPH SEMS
10	1	530-7835-00	PIVOT, AUTO-PLUNGER
11	1	545-5423-00	NYLINER, 1/4" SHAFT, 4L1-FF
12	2	237-5937-02	SCREW, 2-56 X 1/2" HWH MS
13	1	535-6539-00	SWITCH BODY PROTECT PLATE
14	1	180-5157-01	P/F ROLLOVER SWITCH - LITE
15	1	545-6268-00	FISCHE PAPER
16	1	535-9959-00	STOP BRKT
17	1	515-6304-03	PLUNGER / LINK ASSEMBLY

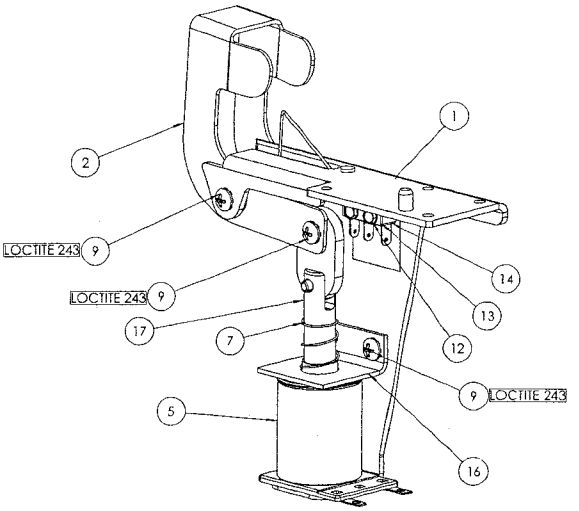

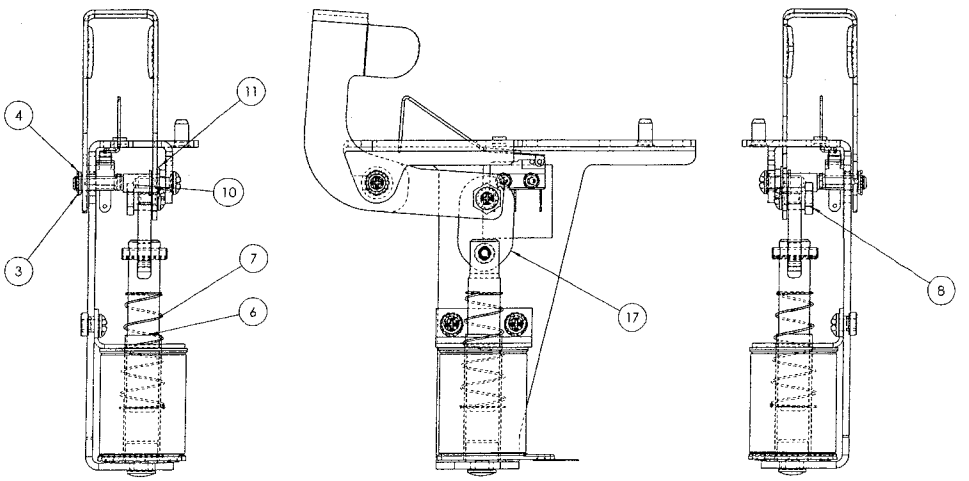

AUTO-PLUNGER

500-9818-00

6-Ball Trough Assembly, 500-6318-16-ND (Items 1-13)
and Associated Parts: See Parts Table Below.

Nr.	4-BALL TROUGH PARTS	QTY.	SPI PART Nr.
1	Ball Trough Outhole Mounting Bracket	1	515-6580-01
	Item 1 is secured below the playfield by: #8 X 1/2" SHWH AB (Zc.) (Qty. 4) (234-5101-00)		
2	Coil Mounting Bracket	1	535-7330-01
	Item 2 is secured to Item 1 by: #8-32 X 3/8" HWH Swage (Sr.) Zinc (Qty. 4) (237-5975-00)		
3	Coil Retaining Bracket	1	535-5203-03
	Item 3 is secured to Item 2 by: #8-32 X 1/4" SHWH (Serr) Zinc (Qty. 2) (237-5975-04)		
4	Coil, 26-1200 [NO DIODE]	1	090-5044-ND
	COIL DOES NOT REQUIRE A DIODE. SEE ⟲ COIL NOTE BELOW FOR DETAILS.		
5	Coil Sleeve (Short) (Formost #10-7077)	1	545-5076-01
6	Steel & Nylon Plunger Assembly	1	515-7309-01
7	Compression (Return) Spring	1	266-5020-00
8	Rubber Bumper (Grommet)	1	545-5105-00
9	Micro Switch (Roller Actuator, Lite-Force)	3	180-5119-02
	Item 9 requires: Heat Shrink Tubing 1/8" ø PUI-24 (Qty. 1"/per) (605-5006-00) Switch has a Diode (1N4004) (112-5003-00). *Can be replaced with (1N4001) (112-5001-00)*		
10	Switch Body Protect Plate	3	535-6539-00

Nr.	4-BALL TROUGH PARTS	QTY.	SPI PART Nr.
11	Trough Ball Guide Plate	0	535-7801-00
	Item 11 is secured to Item 1 by: 1/4" X 5/16" X 1/4" ID Spacer Tan (Qty. 1) (234-8014-03) and #2-56 X 1/2" HWH (Ser) UNS 4-40 TR3 BC (Qty. 4) (237-5937-02)		
12	Dual OPTO TRANS Board Assembly	1	515-0173-00
13	Dual OPTO REC Board Assembly	1	515-0174-00
	Items 12 & 13 are secured by: #6-32 X 5/8" HWH Swg (Ser) Zc (Qty. 3/per) (237-5976-04) *For individual items use:* Dual OPTO Transmitter Board (Qty. 1) (520-5173-00), Dual OPTO Receiver Board (Qty. 1) (520-5174-00), OPTO PCB Tube Spacer (Brass) (Qty. 3/per) (530-5308-02) and OPTO PCB Rubber Grommet (Qty. 3/per) (545-5518-00)		

Ordering Note: If 500-6318-14-ND is unavailable, order the individual part(s) actually required. This assembly is identical to 500-6318-24-ND, -15 or -25 except for the quantity of Items 9 & 10 (Qty. 4/per on 5-Ball Trough) and Item 11, required when a Magnet Mech. is used in the game (this game not required). -ND means no diode on Item 4, Coil, 26-1200.

ASSOCIATED PARTS ARE NOT INCLUDED WITH THE ABOVE ASSEMBLY.

Nr.	ASSOCIATED PART(S)	QTY.	SPI PART Nr.
AP-A	Ball Trough Enter / Exit Scoop	1	535-7329-01
	Item AP-A secured to the playfield by: #8 X 1/2" SHWH AB (Zinc) (Qty. 4) (234-5101-00).		
AP-B	* Steel Balls (1-1/16" ø)	4	260-5000-00

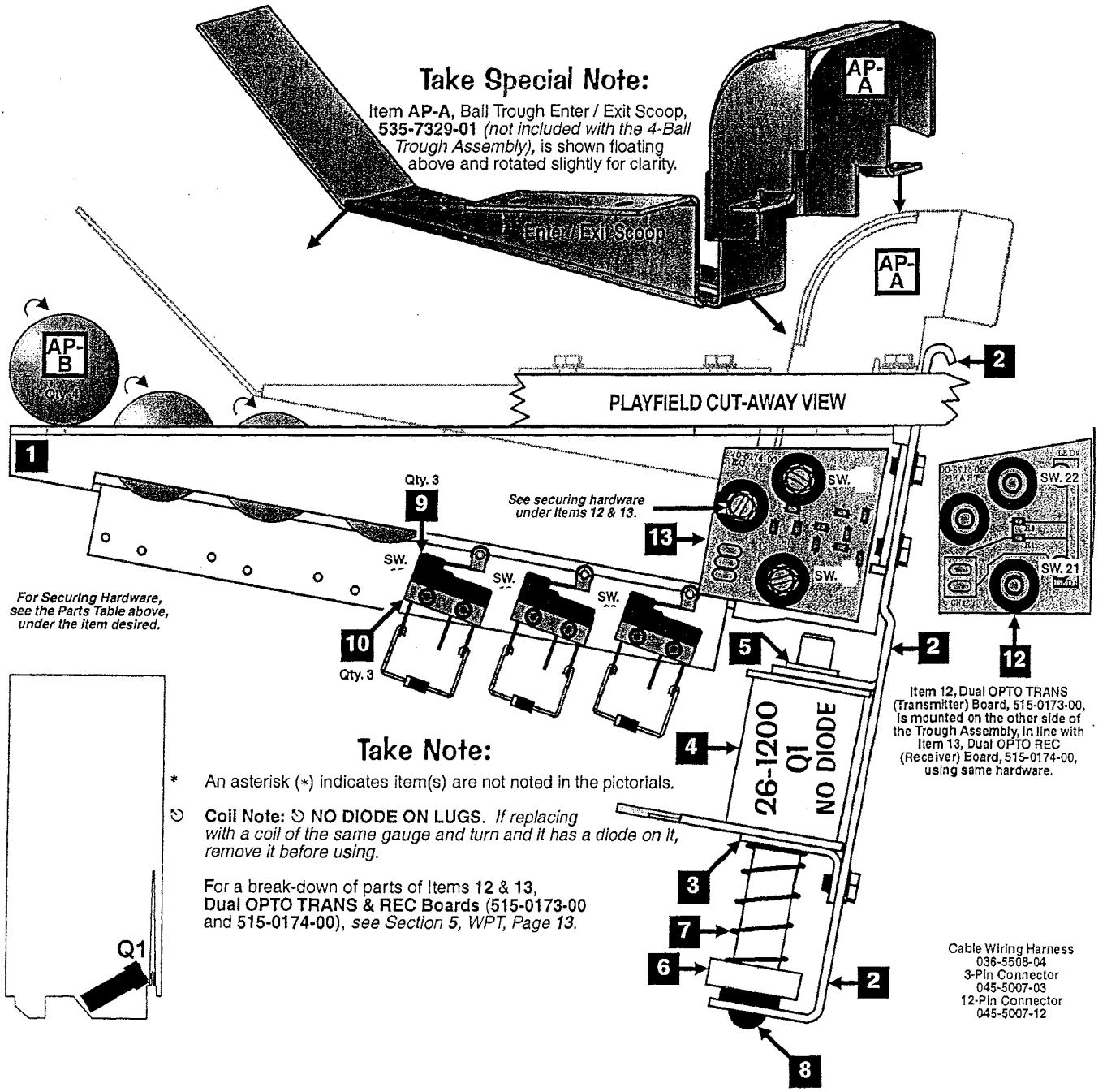

Item 12, Dual OPTO TRANS (Transmitter) Board, 515-0173-00, is mounted on the other side of the Trough Assembly, in line with Item 13, Dual OPTO REC (Receiver) Board, 515-0174-00, using same hardware.

Take Special Note:

Item **AP-A**, Ball Trough Enter / Exit Scoop, **535-7329-01** *(not included with the 4-Ball Trough Assembly)*, is shown floating above and rotated slightly for clarity.

Take Note:

* An asterisk (*) indicates item(s) are not noted in the pictorials.

⟲ **Coil Note:** ⟲ **NO DIODE ON LUGS.** *If replacing with a coil of the same gauge and turn and it has a diode on it, remove it before using.*

For a break-down of parts of Items **12** & **13**, **Dual OPTO TRANS & REC Boards** (**515-0173-00** and **515-0174-00**), *see Section 5, WPT, Page 13.*

Cable Wiring Harness
036-5508-04
3-Pin Connector
045-5007-03
12-Pin Connector
045-5007-12

Flipper (Left) Assembly, 500-6543-13-ND (Items 1-15)
and Associated Parts: Yellow Flipper Bat & Shaft Asm., 515-5133-06-06 (Items AP-A / AP-B)

Nr.	FLIPPER (LEFT) PARTS	QTY.	SPI PART Nr.
1	Flipper Base Plate (**LEFT**)	1	*See **FRP1***
	Item 1 is secured below by: #8 X 1/2" SHWH AB (Zinc) (Qty. 8) (234-5101-00) *Ordering Note : Individual Part (535-7275-01) is not prethreaded, see Item FRP1.*		
2	Flipper Bat Bushing (White Plastic) .25" ø I.D.	1	545-5070-00
	Item 2 is secured to Item 1 by: #6-32 X 3/8" HWH Swage (Ser.) Zc. (Qty. 3) (237-5976-02)		
3	Power (EOS / End-of-Stroke) Switch	1	180-5149-00
	Item 3 is secured to Item 1 by: #6-32 X 5/8" HWH Swage (Ser.) Zc. (Qty. 2) (237-5976-04)		
4	Sw. Plate/Spring Return Brkt. (**LEFT**)	1	535-7354-**01**
5	Flipper Return Spring	1	265-5035-00
6	Coil Stop Bracket Sub-Assembly	1	515-6308-01
	Item 6 is secured to Item 1 by: #10-32 X 3/8" SHWH Swage (Serr) Zinc (Qty. 2) (237-5985-00) and #10 Split Lock Washer (Qty. 2) (244-5003-00)		
7	Spring Washer (17/32" ID X 3/4" X 1")	1	269-5002-00
8	Coil Support Bracket	1	535-7356-00
	Item 8 is secured to Item 1 by: #8-32 X 3/8" HWH Swage (Ser.) Zc. (Qty. 2) (237-5975-00)		
9	Coil, 23-900 [NO DIODE] BLUE	1	090-5020-30
	COIL DOES NOT REQUIRE A DIODE. SEE ↻ COIL NOTE BELOW FOR DETAILS.		
10	Coil Sleeve	1	545-5388-00
11	Deflector Pad (Bumper)	1	545-5428-00
12	Flipper Plunger & Link Sub-Assy.	1	515-6304-03
	For Individual Items use : Flipper Plunger (**530-5349-01**) and Plunger "Flipper" Link (**545-5611-01**) and is secured to the Plunger by: Bushing, .16" ø ID X .281" ø OD X .187" (Qty. 1) (530-5532-00) and Spiral Pin ø 5/32" X 3/4" Lg. (Qty. 1) (251-5015-02)		
13	Crank Bar (Pawl)	1	530-5070-02
	Item 13 requires: Bushing, .192" ø ID X .312" ø OD X .195" (Qty. 1) (530-5139-00)		
14®	Switch Actuator (**LEFT**) Sub-Assy.	1	515-7257-**01**
	For Individual Items use : Actuator & Spring Bracket (**LEFT**) (**535-9038-01**) and ® Switch Actuator (White Plastic) (**545-5612-00**) and is secured to the Bracket by: Rivet, 1/8" ø X 1/4" Lg. (Qty. 1) (249-5003-00)		
15	Set Screw: #10-32 X 3/4" Socket Hd.	2	237-6144-00
	Item 15 requires: #10-32 Nylon Stop Nut (Qty. 1) *Flipper Link Side Only* (240-5203-00) and #10 Split Lock Washer (Qty. 1) *Switch Actuator Side Only* (244-5003-00) *Tool required for Item 15:* 5/32" *or* 4mm Allen Wrench		

Flipper Rebuild Parts for Easier Installation, $ave $:

FRP 1	**FLIPPER BASE PLATE KIT (LEFT) :** *Includes Item 1 pre-threaded >+< Securing Hardware for Items 2, 3, 6 & 8.*	515-6617-**01**
FRP 2	**PLUNGER, LINK & CRANK (LEFT STYLE) ASSEMBLY :** *Includes Items 12, 13, 14 & 15 (comes assembled).*	515-7203-**01**
FRP 3	**FLIPPER (LEFT) REBUILD KIT:** *Includes Items 6, 10 AND above FRP2*	500-6307-**10**

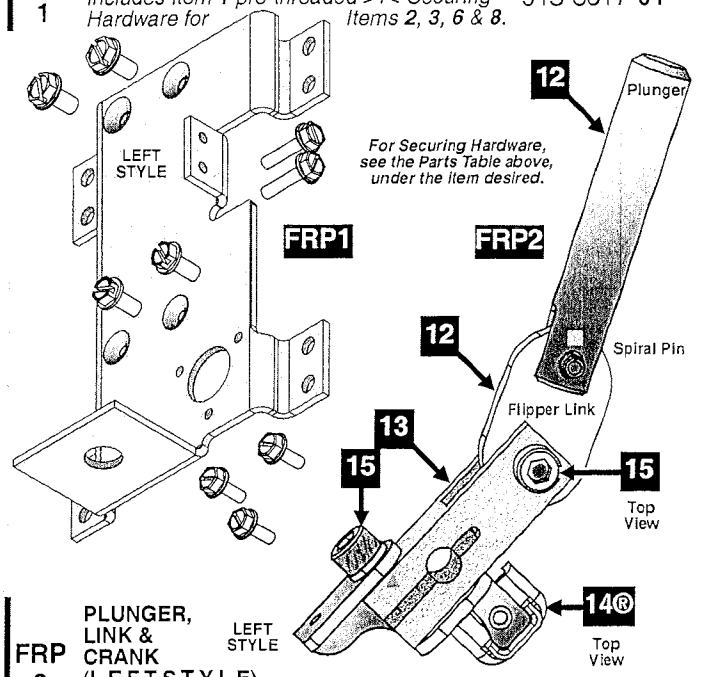

Item 14® is also shown separated from Item 13, Crank Bar, for clarity.

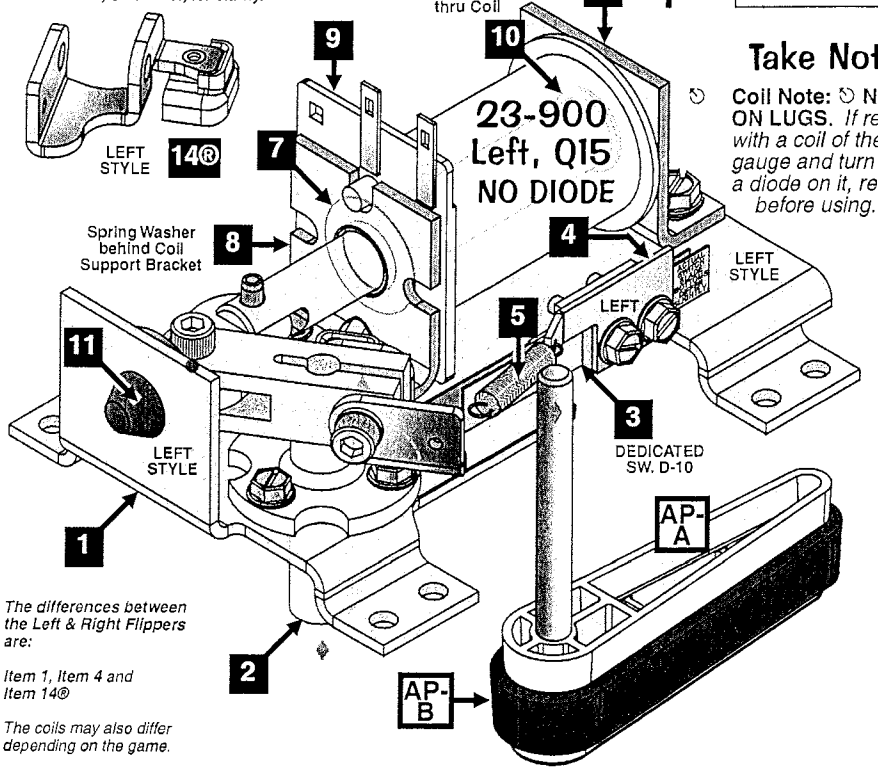

The differences between the Left & Right Flippers are:

Item 1, Item 4 and Item 14®

The coils may also differ depending on the game.

Take Note:

Coil Note: ↻ **NO DIODE ON LUGS.** *If replacing with a coil of the same gauge and turn & it has a diode on it, remove it before using.*

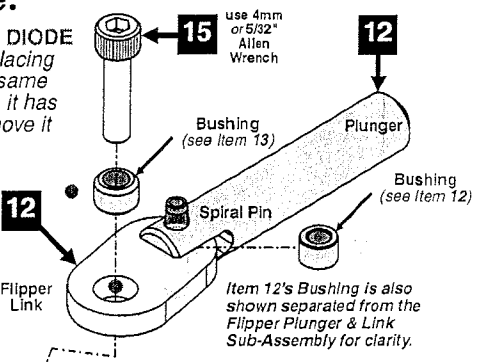

Item 12's Bushing is also shown separated from the Flipper Plunger & Link Sub-Assembly for clarity.

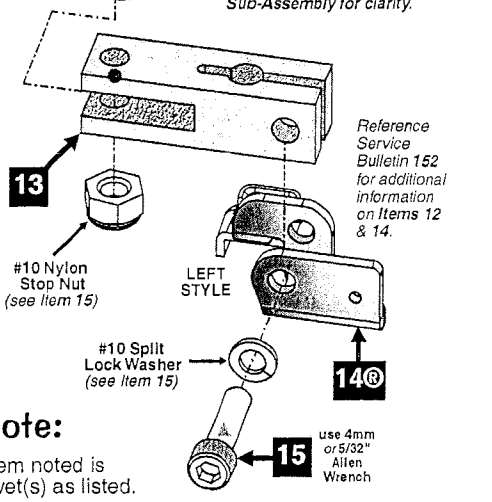

Reference Service Bulletin 152 for additional information on Items 12 & 14.

Take Note:

® "R" indicates Item noted is secured with rivet(s) as listed.

ASSOCIATED PARTS **ARE NOT** INCLUDED WITH THE ABOVE ASSEMBLY.

Nr.	ASSOCIATED PART(S)	QTY.	SPI PART Nr.
AP-A	Yellow Flipper Bat & Shaft Asm. (Non-Knurled End) ***without*** *Rubber Ring*	1	515-5133-**06**-06
AP-B	Large Flipper BLK Rubber Ring	1	545-5277-00

Assemblies & Ramps

Flipper (Right) Assembly, 500-6543-02-ND (Items 1-15)
and Associated Parts: Yellow Flipper Bat & Shaft Asm., 515-5133-06-06 (Items AP-A / AP-B)

Nr.	FLIPPER (RIGHT) PARTS	QTY.	SPI PART Nr.
1	Flipper Base Plate (**RIGHT**)	1	*See FRP1*
	Item 1 is secured below by: #8 X 1/2" SHWH AB (Zinc) (Qty. 8) (234-5101-00)		
	***Ordering Note : Individual Part (535-7275-00) is not prethreaded,** see Item FRP1.*		
2	Flipper Bat Bushing (White Plastic) .25" ø I.D.	1	545-5070-00
	Item 2 is secured to Item 1 by: #6-32 X 3/8" HWH Swage (Ser.) Zc. (Qty. 3) (237-5976-02)		
3	Power (EOS / End-of-Stroke) Switch	1	180-5149-00
	Item 3 is secured to Item 1 by: #6-32 X 5/8" HWH Swage (Ser.) Zc. (Qty. 2) (237-5976-04)		
4	Sw. Plate/Spring Return Brkt. (**RIGHT**)	1	535-7354-**00**
5	Flipper Return Spring	1	265-5035-00
6	Coil Stop Bracket Sub-Assembly	1	515-6308-01
	Item 6 is secured to Item 1 by: #10-32 X 3/8" SHWH Swage (Serr) Zinc (Qty. 2) (237-5985-00) **and** #10 Split Lock Washer (Qty. 2) (244-5003-00)		
7	Spring Washer (17/32" ID X 3/4" X 1")	1	269-5002-00
8	Coil Support Bracket	1	535-7356-00
	Item 8 is secured to Item 1 by: #8-32 X 3/8" HWH Swage (Ser.) Zc. (Qty. 2) (237-5975-00)		
9	Coil, 22-1080 [NO DIODE] BLUE	1	090-5032-ND
	COIL DOES NOT REQUIRE A DIODE. SEE ↻ COIL NOTE PREV. PAGE FOR DETAILS.		
10	Coil Sleeve	1	545-5388-00
11	Deflector Pad (Bumper)	1	545-5428-00
12	Flipper Plunger & Link Sub-Assy.	1	515-6304-03
	For Individual Items use : Flipper Plunger (**530-5349-01**) **and** Plunger "Flipper" Link (**545-5611-01**) **and is secured to the Plunger by:** Bushing, .16" ø ID X .281" ø OD X .187" (Qty. 1) (530-5532-00) **and** Spiral Pin ø 5/32" X 3/4" Lg. (Qty. 1) (251-5015-02)		
13	Crank Bar (Pawl)	1	530-5070-02
	Item 13 requires: Bushing, .192" ø ID X .312" ø OD X .195" (Qty. 1) (530-5139-00)		
14®	Switch Actuator (**RIGHT**) Sub-Assy.	1	515-7257-**00**
	For Individual Items use : Actuator & Spring Bracket (**LEFT**) (**535-9038-01**) **and** ® Switch Actuator (White Plastic) (**545-5612-00**) **and is secured to the Bracket by:** Rivet, 1/8" ø X 1/4" Lg. (Qty. 1) (249-5003-00)		
15	Set Screw: #10-32 X 3/4" Socket Hd.	2	237-6144-00
	Item 15 requires: #10-32 Nylon Stop Nut (Qty. 1) ***Flipper Link Side Only*** (240-5203-00) **and** #10 Split Lock Washer (Qty. 1) ***Switch Actuator Side Only*** (244-5003-00)		
	Tool required for Item 15: **5/32"** *or* **4mm Allen Wrench**		

Flipper Rebuild Parts for Easier Installation, $ave $:

FRP 1 **FLIPPER BASE PLATE KIT (RIGHT) :** *Includes Item 1 pre-threaded >+< Securing Hardware for Items 2, 3, 6 & 8.* 515-6617-**00**

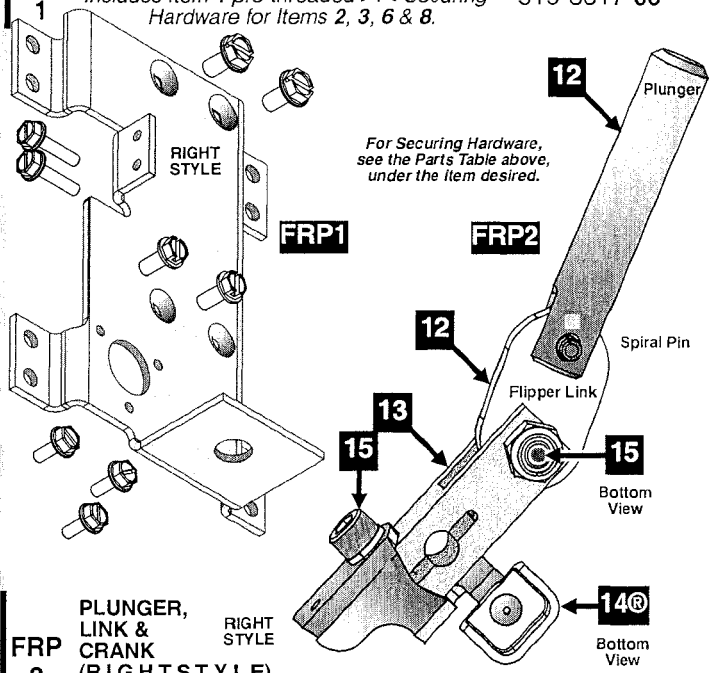

FRP 2 **PLUNGER, LINK & CRANK (RIGHT STYLE) ASSEMBLY :** *Includes Items 12, 13, 14 & 15 (comes assembled).* 515-7203-**00**

FRP 3 **FLIPPER (RIGHT) REBUILD KIT :** *Includes Items 6, 10 AND above FRP2* 500-6307-**00**

Item 14® is also shown separated from Item 13, Crank Bar, for clarity.

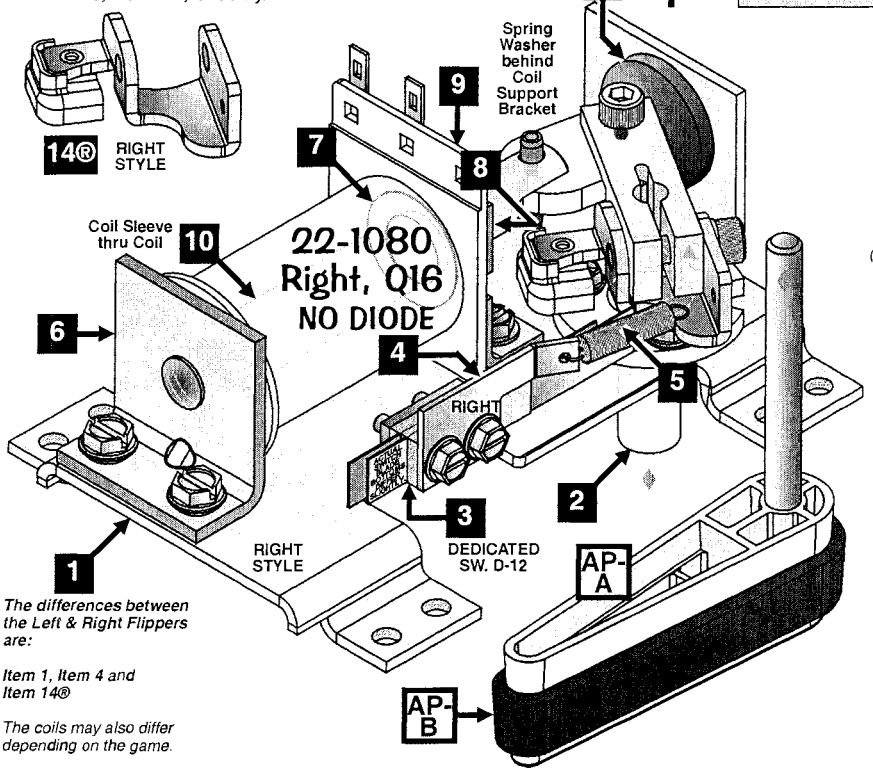

The differences between the Left & Right Flippers are:

Item 1, Item 4 and Item 14®

The coils may also differ depending on the game.

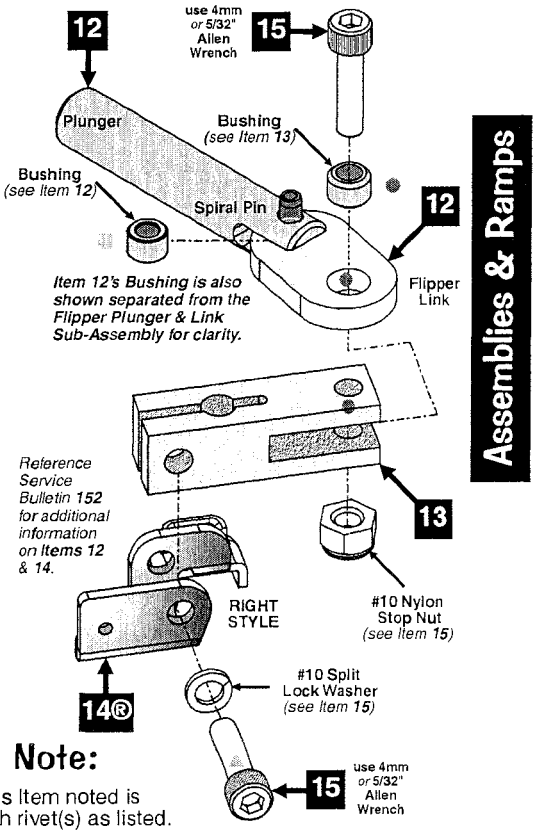

ASSOCIATED PARTS **ARE NOT INCLUDED** WITH THE ABOVE ASSEMBLY.

Nr.	ASSOCIATED PART(S)	QTY.	SPI PART Nr.
AP-A	**YELLOW** Flipper Bat & Shaft Asm. (Non-Knurled End) ***without*** *Rubber Ring*	1	515-5133-06-06
AP-B	Large Flipper **BLK** Rubber Ring	1	545-5277-00

Take Note:

® "R" indicates Item noted is secured with rivet(s) as listed.

Slingshot (Left & Right) Assemblies, 500-5849-01-ND (Qty. 2) (Items 1-9)

Nr.	SLINGSHOT PARTS	QTY.	SPI PART Nr.
1	Slingshot Bracket Assembly	1/per	515-5339-01
	Item 1 is secured below the playfield by: #8 X 1/2" SHWH AB (Zc.) (Qty. 3) (234-5101-00)		
2	Coil Retaining Bracket	1/per	535-5203-03
	Item 2 is secured to Item 1 by: #8-32 X 3/8" PPH MS (Sems) (Qty. 2) (232-5301-00)		
3	Coil, 26-1200 [NO DIODE]	1/per	090-5044-ND
	COIL DOES NOT REQUIRE A DIODE. SEE ↻ COIL NOTE BELOW FOR DETAILS.		
4	Coil Sleeve	1/per	545-5031-00
5	Plunger & Link Assembly	1/per	515-5338-00
	For Individual Items use : Plunger 2" Lg. (530-5025-01), Plunger Link (545-5293-00) and Roll Pin 1/8" ø x 5/8" Lg. (251-5008-00) The Plunger Link is secured to the Riveted Arm by: Retaining Ring, 1/4" ø Shaft (Qty. 1) (270-5002-00)		
	Ordering Note: If 515-5338-00 is unavailable, order the individual part(s) actually required.		

Nr.	SLINGSHOT PARTS	QTY.	SPI PART Nr.
6	Compression (Return) Spring	1/per	266-5020-00
7	Slingshot Stack (Blade) Switch	2/per	180-5054-00
	Only 1 of the 2 Switches has a Diode (1N4004) (112-5003-00). *See Note Below on Drawing. Can be replaced with (1N4001) (112-5001-00).*		
8	Switch Body Protect Plate	2/per	535-5045-00
	Items 7 & 8 are secured to Item 1 by: #6-32 X 5/8" HWH Swage (Qty. 4) (237-5976-04)		
9®	Riveted Arm & Tip Assembly	1/per	515-5340-01
	For Individual Parts use (requires drilling out rivet & rereviting) : Arm (515-5341-01), Kicker Tip (545-5216-01) and Rivet, 1/8" ø x 1/4" Lg. (249-5003-00) The Riv. Arm is secured to Item 1 by: Retaining Ring, 1/4" ø Shaft (Qty. 1) (270-5002-00)		
	Ordering Note: If 515-5340-01 is unavailable, order the individual part(s) actually required.		
	Ordering Note: If 500-5849-00-ND is unavailable, order the individual part(s) actually required. This assembly is identical to 500-5849-02-ND with the exception of Item 3, which uses a Coil, 27-1500 [NO DIODE] (090-5004-ND) instead.		

Take Note:

↻ **Coil Note:** ↻ NO DIODE ON LUGS. *If replacing with a coil of the same gauge and turn and it has a diode on it, remove it before using.*

® "R" indicates Item noted is secured with rivet(s) as listed.

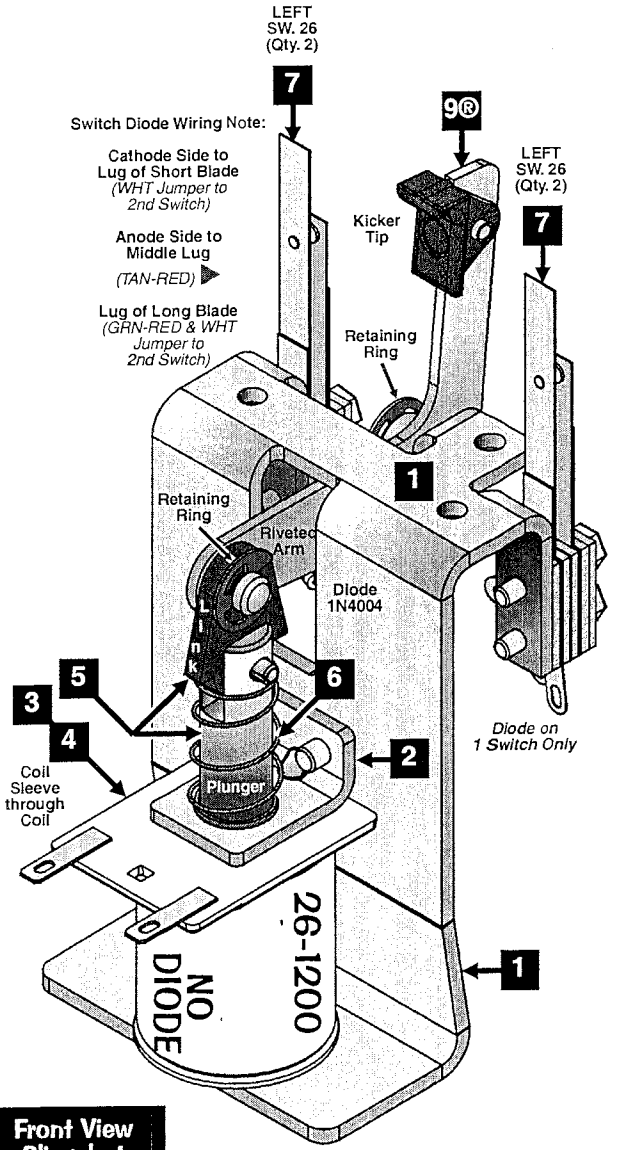

Front View Slingshot (Left)

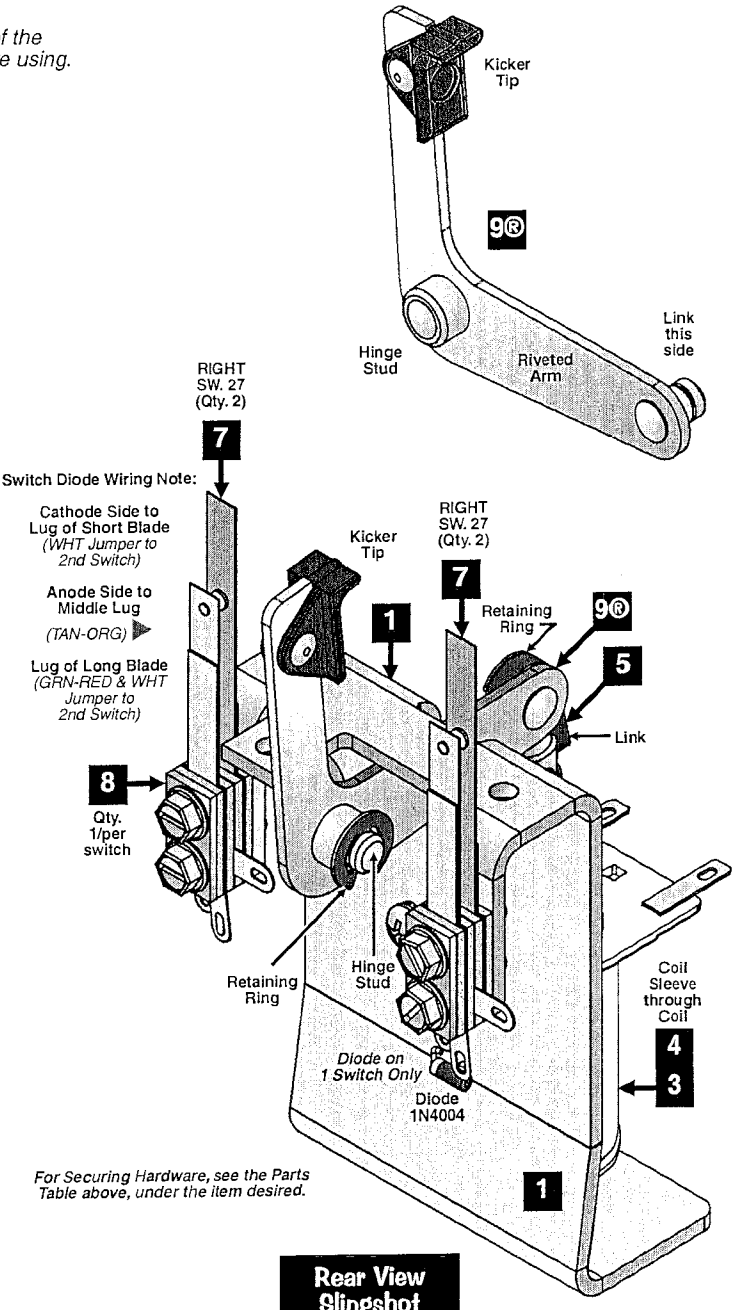

Rear View Slingshot (Right)

For Securing Hardware, see the Parts Table above, under the item desired.

Assemblies & Ramps

Left, Right & Bottom Bumper & Switch Individual Parts Only (Items 1-18)
and Associated Part: See Parts Table Below.

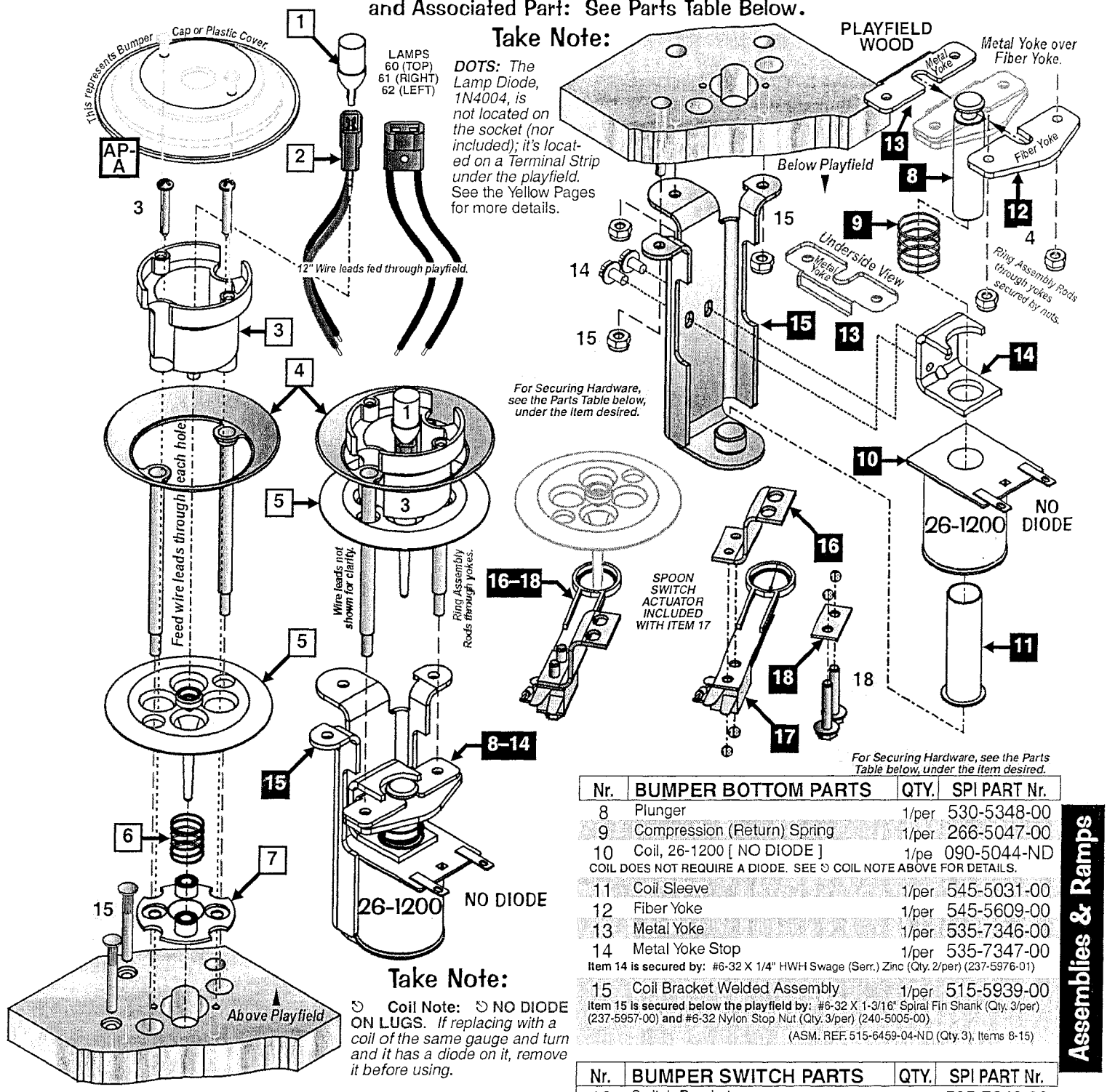

Nr.	BUMPER TOP PARTS	QTY.	SPI PART Nr.
1	LED Module (WHT) (6.3v) Wedge Base	1/per	112-5024-08
2	Wedge Base Socket	1/per	077-5206-00
3	Bumper Body	1/per	545-5197-00
	Item 3 is secured above the P/F by: #5 X 7/8" PRH AB (Zinc) (Qty. 2/per) (237-5826-00)		
4	Ring Assembly	1/per	515-5085-00
	Item 4 is secured by: #6-32 Nylon Stop Nut (Qty. 2/per) (240-5005-00)		
5	Bumper Skirt (Switch Actuator)	1/per	545-5607-00
6	Bumper Skirt Compression Spring	1/per	266-5048-00
7	Bumper Base	1/per	545-5195-00
	(ASM. REF. 515-6459-01L (Qty. 3), Items 1-7		

The Top & Bottom Assemblies are secured together by hardware noted in Item 4.

Nr.	BUMPER BOTTOM PARTS	QTY.	SPI PART Nr.
8	Plunger	1/per	530-5348-00
9	Compression (Return) Spring	1/per	266-5047-00
10	Coil, 26-1200 [NO DIODE]	1/pe	090-5044-ND
	COIL DOES NOT REQUIRE A DIODE. SEE ↻ COIL NOTE ABOVE FOR DETAILS.		
11	Coil Sleeve	1/per	545-5031-00
12	Fiber Yoke	1/per	545-5609-00
13	Metal Yoke	1/per	535-7346-00
14	Metal Yoke Stop	1/per	535-7347-00
	Item 14 is secured by: #6-32 X 1/4" HWH Swage (Serr.) Zinc (Qty. 2/per) (237-5976-01)		
15	Coil Bracket Welded Assembly	1/per	515-5939-00
	Item 15 is secured below the playfield by: #6-32 X 1-3/16" Spiral Fin Shank (Qty. 3/per) (237-5957-00) and #6-32 Nylon Stop Nut (Qty. 3/per) (240-5005-00)		
	(ASM. REF. 515-6459-04-ND (Qty. 3), Items 8-15)		

Nr.	BUMPER SWITCH PARTS	QTY.	SPI PART Nr.
16	Switch Bracket	1/per	535-7342-00
	Item 16 is secured by: #8 X 1/2" HWH AB (Zinc) (Qty. 2/per) (234-5101-00)		
17	Bumper Stack (Blade) Switch Assy.	1/per	180-5015-04
	Included with Item 17: Spoon Switch Actuator (545-5610-02). Switch has a Diode (1N4004) (112-5003-00). *Can be replaced with (1N4001) (112-5001-00).*		
18	Switch Body Protect Plate	1/per	535-7344-00
	Items 17 & 18 are secured by: #6-32 X 3/4" HWH Swage (Serr) Zc. (Qty. 2) (237-5976-05)		
	Can substitute Item 17 with 180-5015-05 (ASM. REF. 515-6459-09/R (Qty. 3), Items 16-18)		

ASSOCIATED PARTS ARE NOT INCLUDED WITH THE ABOVE ASSEMBLIES.

Nr.	ASSOCIATED PART(S)	QTY.	SPI PART Nr.
AP-A	Kit: Plastics *(includes -10, -11 & -12)*	1	803-5000-E6
	Note: Individual Plastics (830-6071-XX) are not available individually, ordering of kit is required.		
	Item AP-A is secured Item 3 by: #5 X 7/8" PRH AB (Zinc) (Qty. 2/per) (237-5826-00)		

ASSEMBLY, 1-BANK DROP TARGET W/ TRIP COIL

500-9826-01

ITEM NO.	PART NUMBER	DESCRIPTION	QTY
1	515-0183-00	FRAME ASSY, 1-BANK DT W/ TRIP	1
2	545-6163-01	LEDGE, 1-BANK DROP TARGET	1
3	545-6798-00	SHIM - FICHE PAPER - D.T. SINGLE	1
4	237-6169-00	SCREW, 4-40 X 1/4 PPH MS	2
5	545-6305-00	TARGET - ROLLOVER - BLACK	1
6	242-5091-00	WASHER, 1/2 X 17/64 X .03 - DT	3
7	266-5089-00	SPRING COMPRESSION - DT	1
8	270-5002-00	RETAINING RING - 1/4"	2
9	535-9959-00	STOP BRKT	1
10	240-5102-00	8-32 NYLON LOCK NUT	4
11	545-5076-01	COIL SLEEVE	1
12	269-5002-00	SPRING WASHER	1
13	090-5034-ND	COIL 25-1240 - NO DIODE	1
14	530-5757-00	PLUNGER - D.T. ASSY.	1
15	535-9760-01A	LIFT BRKT - 1 BANK	1
16	237-5985-00	10-32 X 3/8 SHWH SWAGE SCREW	1
17	266-5020-00	COMPRESSION SPRING-CONICAL	1
18	535-9777-01	COIL BRACKET-DT-OD	1
19	237-5602-00	SCREW, 8-32 X 1/2" PPH MS, ZINC	2
20	265-5003-03	TARGET RESET SPRING	1
22	237-5501-00	SCREW, 6-32 X 3/8" PPH MS ZINC	2
21	520-5252-01	1 BANK DROP TARGET PCB-OPTO	1
21	520-5252-01	1 BANK DROP TARGET PCB-OPTO	1
22	237-5501-00	SCREW, 6-32 X 3/8" PPH MS ZINC	2
23	535-0789-00	BRACKET, TRIP COIL MOUNT, 1-DT	1
24	232-5300-00	SCREW, 8-32 X 1/4" PPH SEMS	2
25	515-9702-00-ND	COIL ASSEMBLY, TARGET DROP	1
26	237-5975-00	SCREW, 8-32 X 3/8" HWH SWAGE ZN	1
99*	036-5605-07-E4	CABLE, DT W/ TRIP	1

* ITEM NOT SHOWN

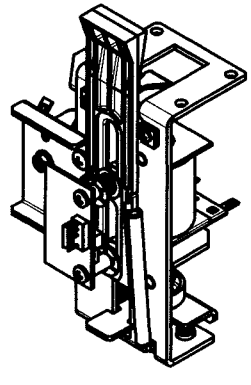

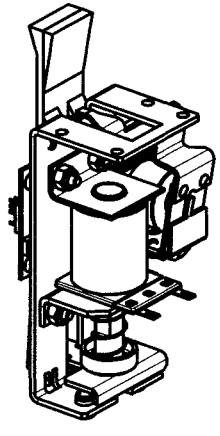

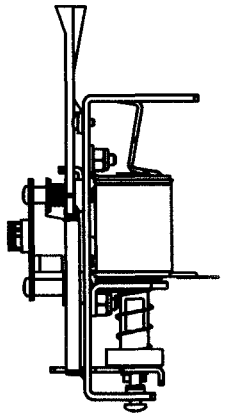

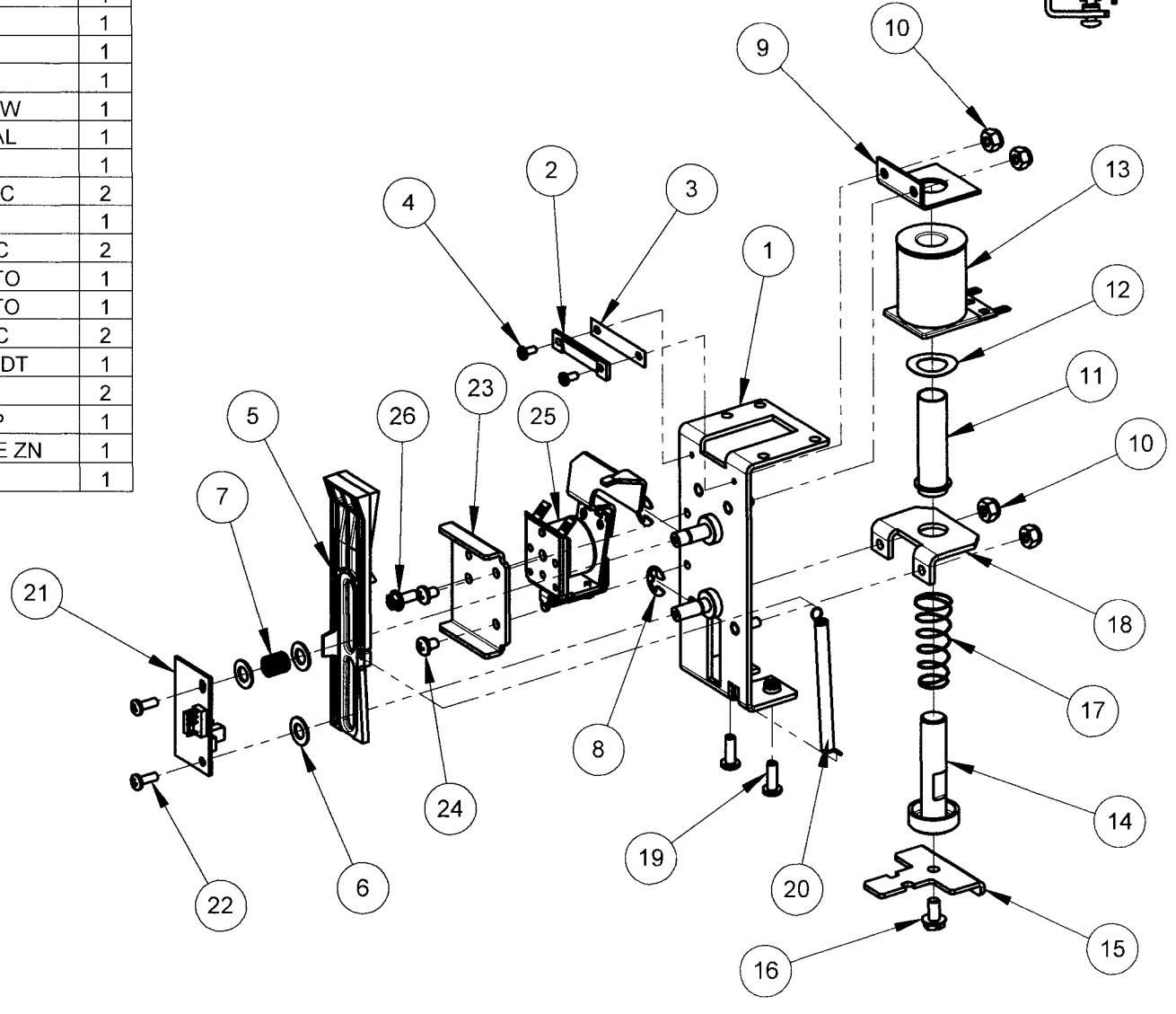

ITEM NO.	PART NUMBER	DESCRIPTION	QTY.
1	545-7885-00	TURNTABLE DISK, BISCUIT LE	1
2	515-9734-00	WELDMENT, TT MOUNT, BISCUIT LE	1
3	232-5301-00	SCREW, 8-32 X 3/8" PPH SEMS	4
4	880-6154-01	CAR, MAISTO 1:24 SCALE, MODIFIED	1
5	254-5000-12	NYLON SPACER - BLACK - 3/8 OD X .175 ID X 3/8"	2
6	232-5006-00	SCREW, #6 X 1-1/4" PPH AB ZINC	2
7	242-5005-00	#8 WASHER	4

ASSEMBLY, TURNTABLE
MUSTANG LE
511-7534-00

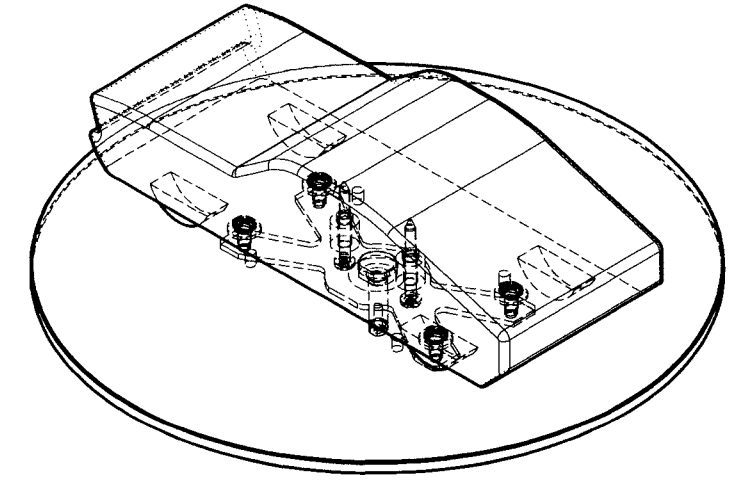

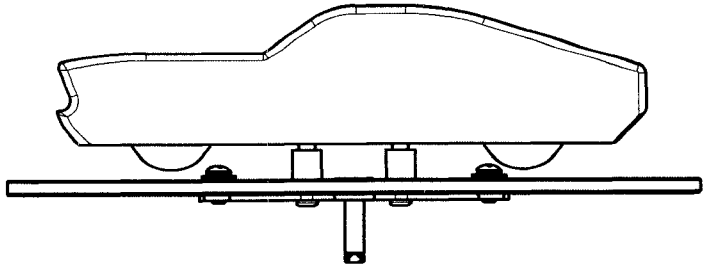

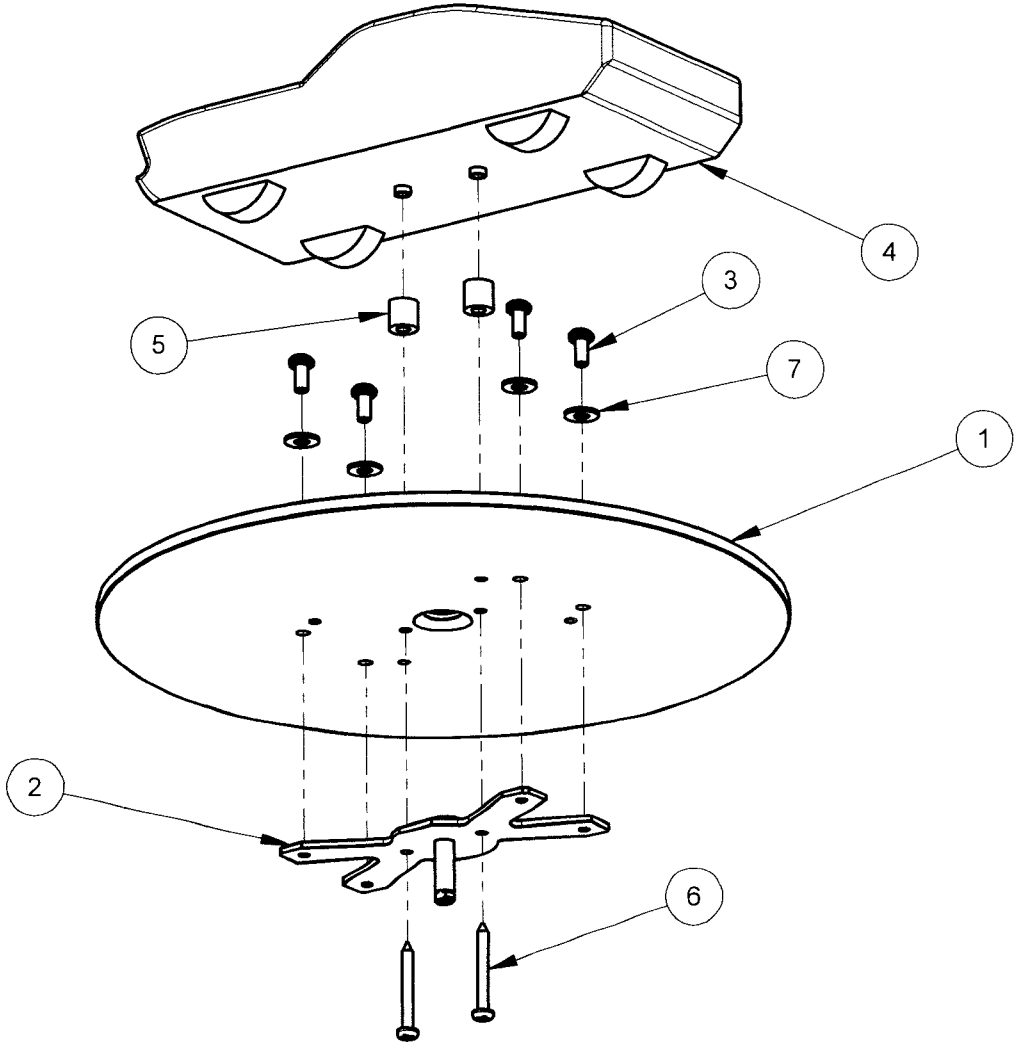

ASSEMBLY, TURNTABLE / SUPPORT
MUSTANG LE / PREMIUM
500-9845-00 / -02

ITEM NO.	PART NUMBER	DESCRIPTION	QTY.
1	511-7533-00	ASSEMBLY, TURNTABLE SUPPORT, BISCUIT	1
2	242-5618-00	WASHER, TURNTABLE SUPPORT, BISCUIT LE	1
3	* 511-7534-00	ASSEMBLY, TURNTABLE, BISCUIT LE	1
4	232-5201-00	SCREW, 6-32 X 3/8" PPH MS SEMS	1
5	242-5001-00	#6 WASHER	1
6	535-0905-00	PLATE, TT ENCODER, BISCUIT LE	1
7	242-5091-00	WASHER, 1/2 X 17/64 X .03 - DT	1
8	242-5008-00	WASHER, 1/4" ID X 1/2" OD X 1/16" THICK	1
9	270-5002-00	RETAINING RING - 1/4"	1

* PREMIUM ASSEMBLY = -01

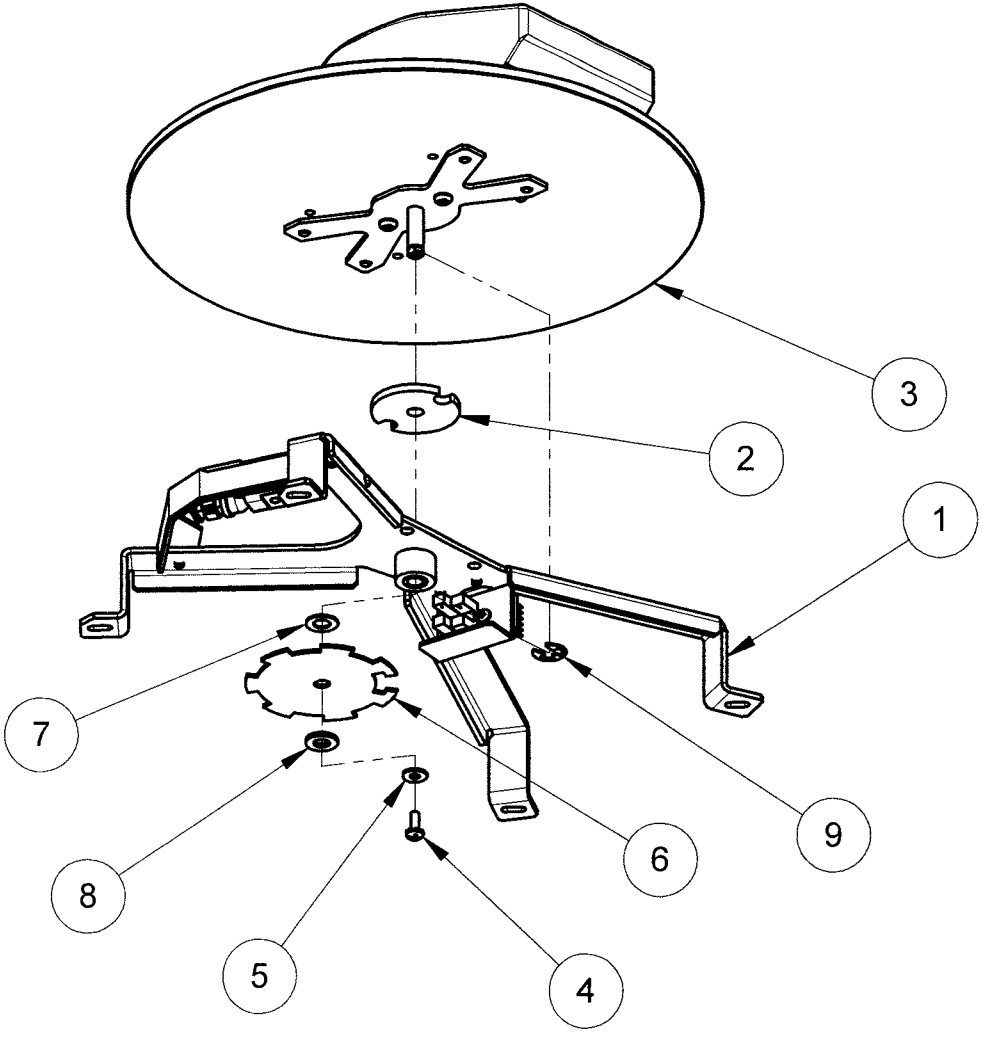

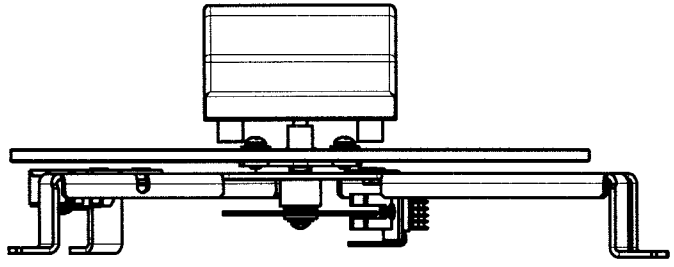

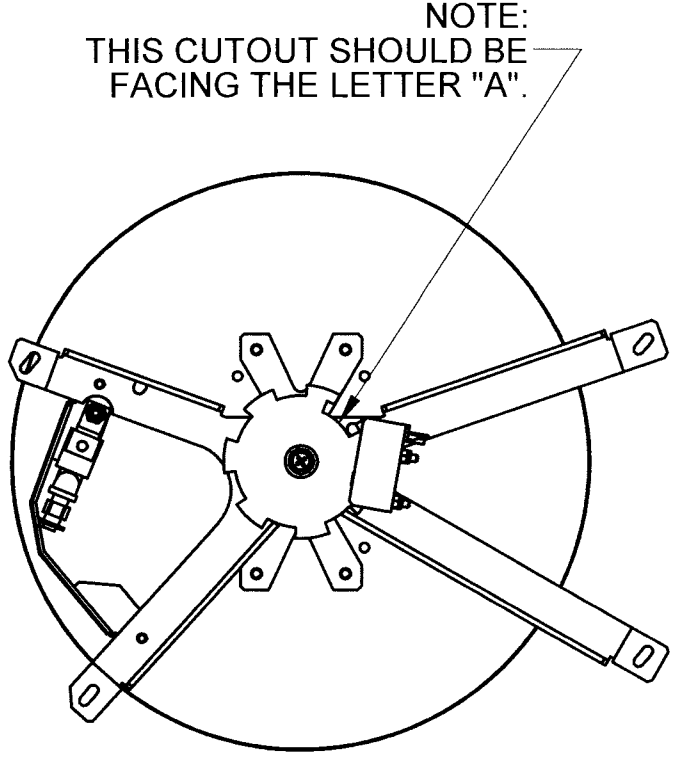

ITEM NO.	PART NUMBER	DESCRIPTION	QTY.
1	515-9733-00	WELDMENT, TT SUPPORT, BISCUIT	1
2	511-7531-00	ASSEMBLY, TT OPTO, BISCUIT LE	1
	535-0984-00	BRACKET, TT OPTO MOUNT, BISCUIT LE	1
	520-6931-00	OPTO INTERRUPTOR BOARD - DUAL OPTO	1
	237-5979-00	SCREW, 4-40 X 3/8", PPH (ZINC)	2
	240-5303-00	4-40 NYLON LOCK NUT	2
3	237-5871-01	SCREW, 6-32 X 1/4" PFH 82-DEG U/C ZINC	4
4	511-7555-00	ASSEMBLY, INDICATOR BRKT, BISCUIT LE	1
	535-0904-00	BRACKET, TT INDICATOR, BISCUIT LE	1
	077-5026-01	SOCKET, L/D WEDGE BASE BLACK	1
	112-5041-08	MULTI-LED FLASHER - WEDGE BASE - WHITE	1
	240-5005-00	6-32 NYLON STOP NUT	1
	820-8339-50	DECAL #50, BISCUIT LE	1

ASSEMBLY, TURNTABLE SUPPORT
MUSTANG LE / PREMIUM
511-7533-00

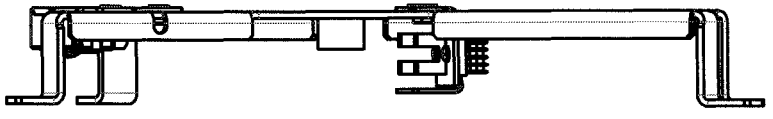

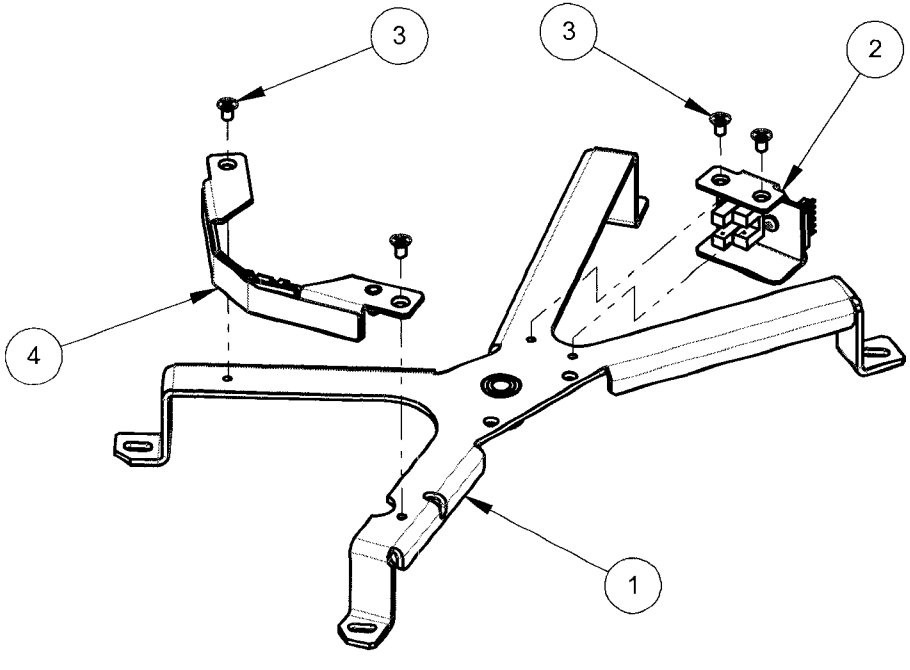

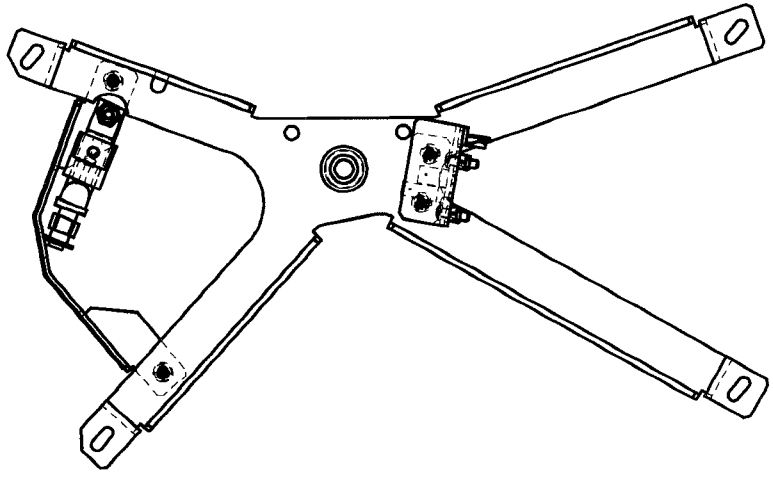

ITEM NO.	PART NUMBER	DESCRIPTION	QTY.
1	515-9732-00	SUPPORT TUBE, TT MOTOR, BISCUIT	1
2	232-5204-00	SCREW, 6-32 X 3/4" PPH SEMS	2
3	234-5101-00	SCREW, #8 X 1/2" SLT HWH AB ZINC	4
4	511-7556-01	ASSEMBLY, MOTOR SHAFT, BISCUIT LE	1
5	500-9844-00	ASSEMBLY, TURNTABLE MOTOR, BISCUIT	1
6	242-5008-00	WASHER, 1/4" ID X 1/2" OD X 1/16" THICK	3
7	511-7532-00	ASSEMBLY, TT DRIVE, BISCUIT LE	1
8	234-5001-02	SCREW, #6 X 1/2" HWH	1
9	240-5203-00	10-32 NYLON LOCK NUT	1
10	* 500-9845-00	ASSY, TURNTABLE / SUPPORT, BISCUIT	1
11	240-5002-00	6-32 T-NUT	2
12	545-7900-00	COUPLING DISC, TT MOTOR, BISCUIT LE	1

TURNTABLE REFERENCE ASSEMBLY
MUSTANG LE / PREMIUM

* PREMIUM ASSEMBLY = -02

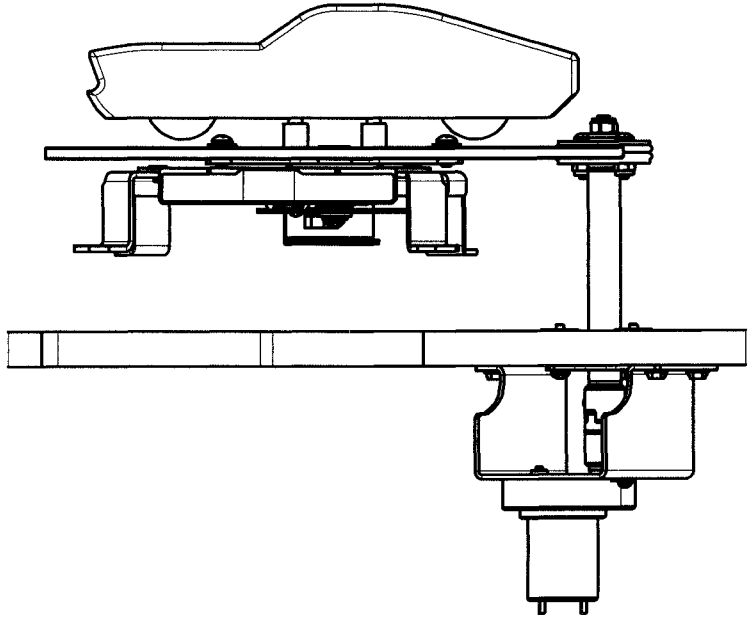

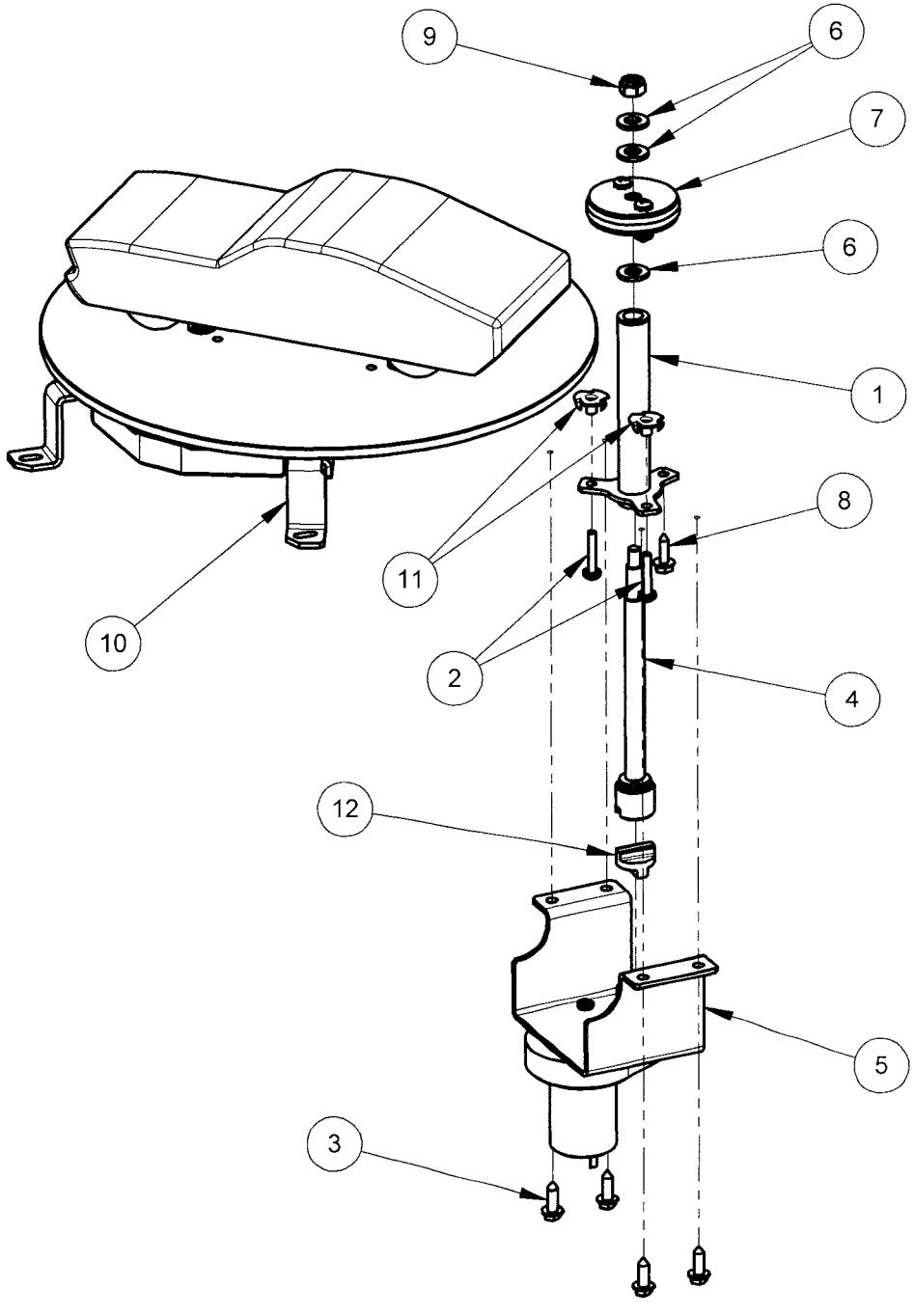

ITEM NO.	PART NUMBER	DESCRIPTION	QTY.
1	530-7881-00	DRIVE HUB, TURNTABLE, BISCUIT LE	1
2	535-0903-00	CLAMP PLATE, TT DRIVE, BISCUIT LE	2
3	545-7894-01	O-RING, TYPE 216 1" ID X Ø 1/8", URETHANE	2
4	232-5203-00	SCREW, 6-32 X 5/8" PPH SEMS ZINC	2
5	240-5005-00	6-32 NYLON STOP NUT	2

ASSEMBLY, TURNTABLE DRIVE
MUSTANG LE / PREMIUM
511-7532-00

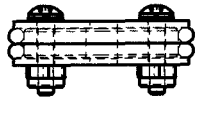

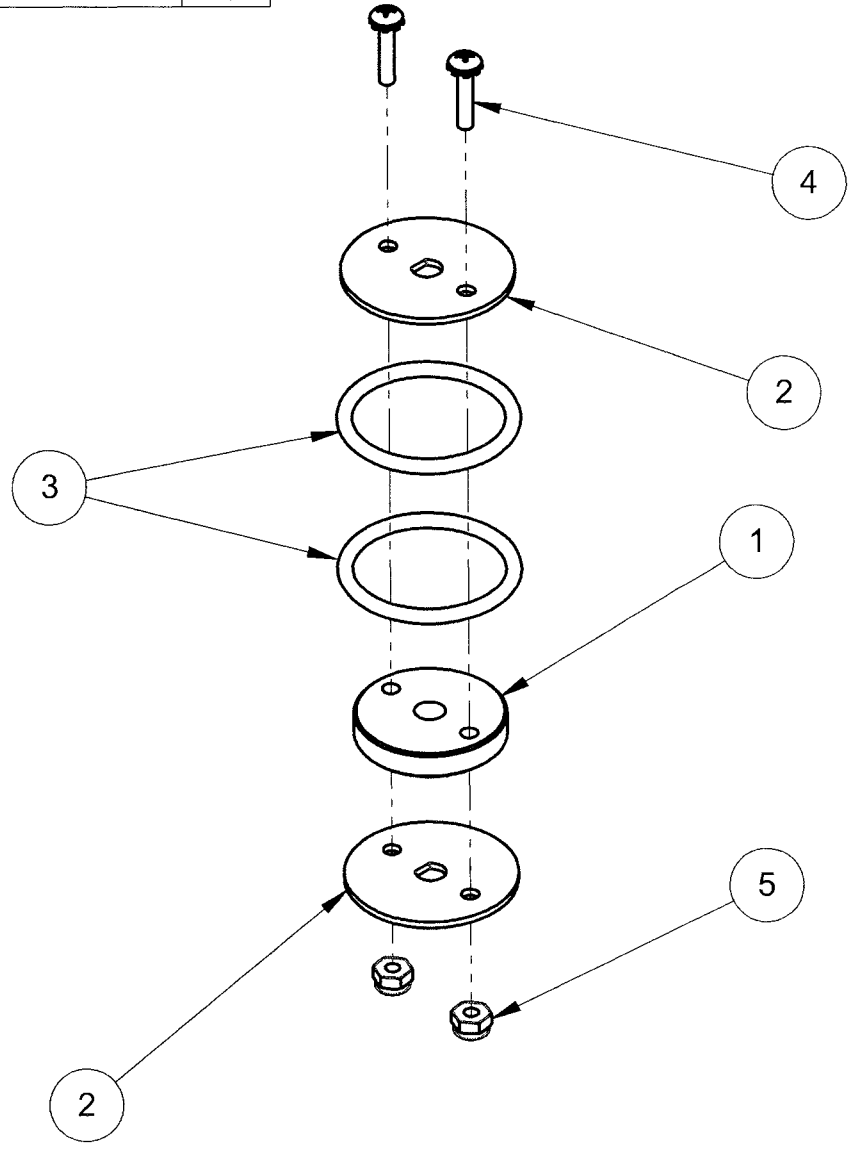

ITEM NO.	PART NUMBER	DESCRIPTION	QTY.
1	530-7866-01	SHAFT, TURNTABLE MOTOR, BISCUIT LE	1
2	242-5008-00	WASHER, 1/4" ID X 1/2" OD X 1/16" THICK	1
3	270-5002-00	RETAINING RING - 1/4"	1
4	530-7867-01	HALF COUPLING, TT MOTOR, BISCUIT LE	1
5	237-6092-00	SET SCREW, 10-32 X 5/16, SOCKET CUP PT	1

ASSEMBLY, MOTOR SHAFT
BISCUIT LE / PREMIUM
511-7556-01

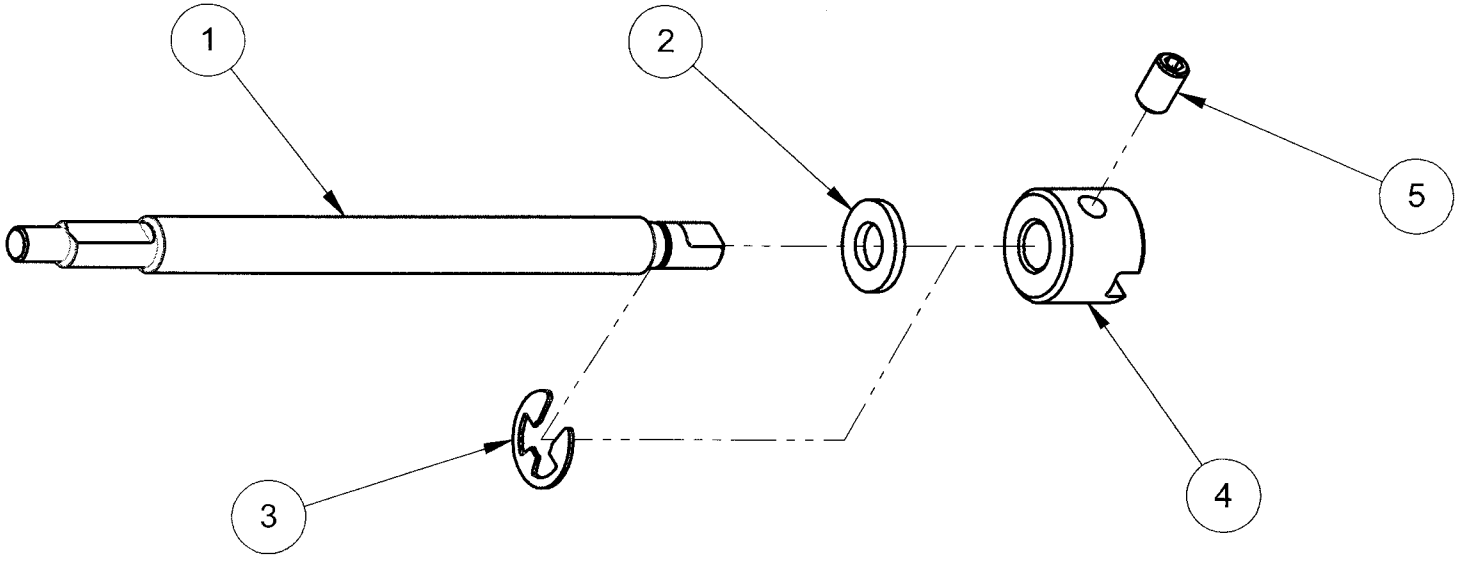

ITEM NO.	PART NUMBER	DESCRIPTION	QTY.
1	535-0971-01	BRACKET, TT MOTOR MOUNT, BISCUIT	1
2	511-6968-00	MOTOR & CONN ASSY, 24 VDC, 12 RPM	1
3	237-5909-00	SCREW, 4-40 X 1/4" PPH SEMS	2
4	530-7867-01	HALF COUPLING, TT MOTOR, BISCUIT LE	1
5	237-6092-00	SET SCREW, 10-32 X 5/16, SOCKET CUP PT	1
6	242-5072-01	NYLON WASHER .252 ID X .472 OD	1
7	242-5008-00	WASHER, 1/4" ID X 1/2" OD X 1/16" THICK	1

ASSEMBLY, TURNTABLE MOTOR
MUSTANG LE / PREMIUM
500-9844-00

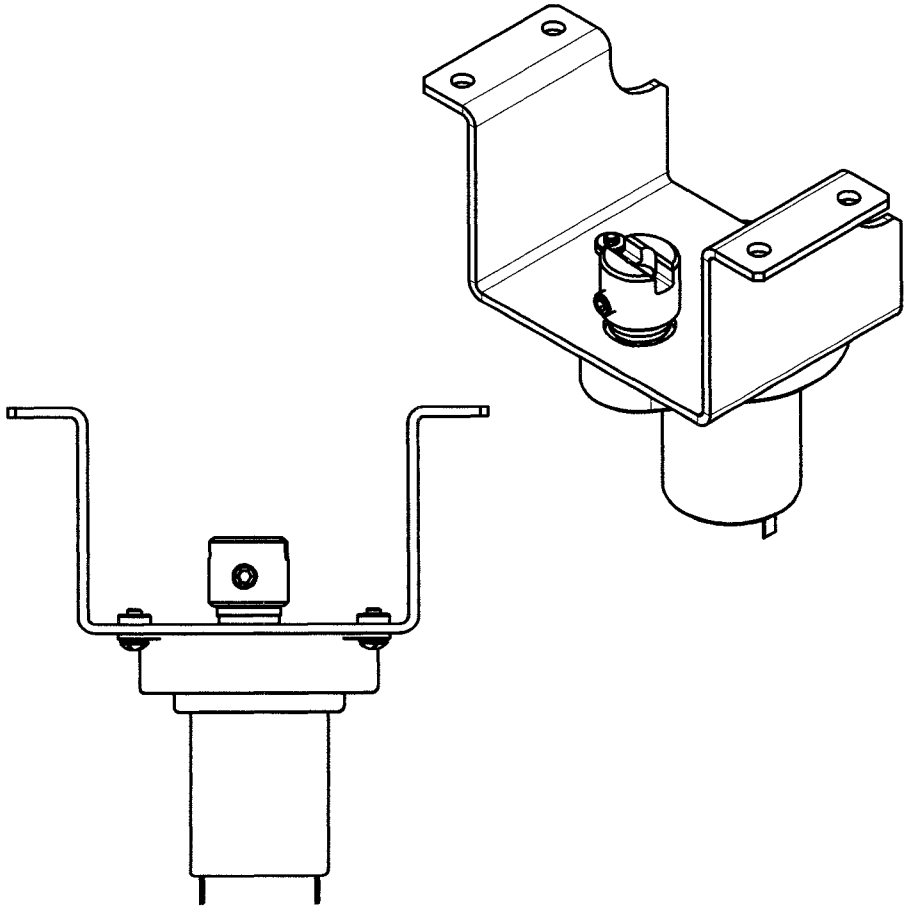

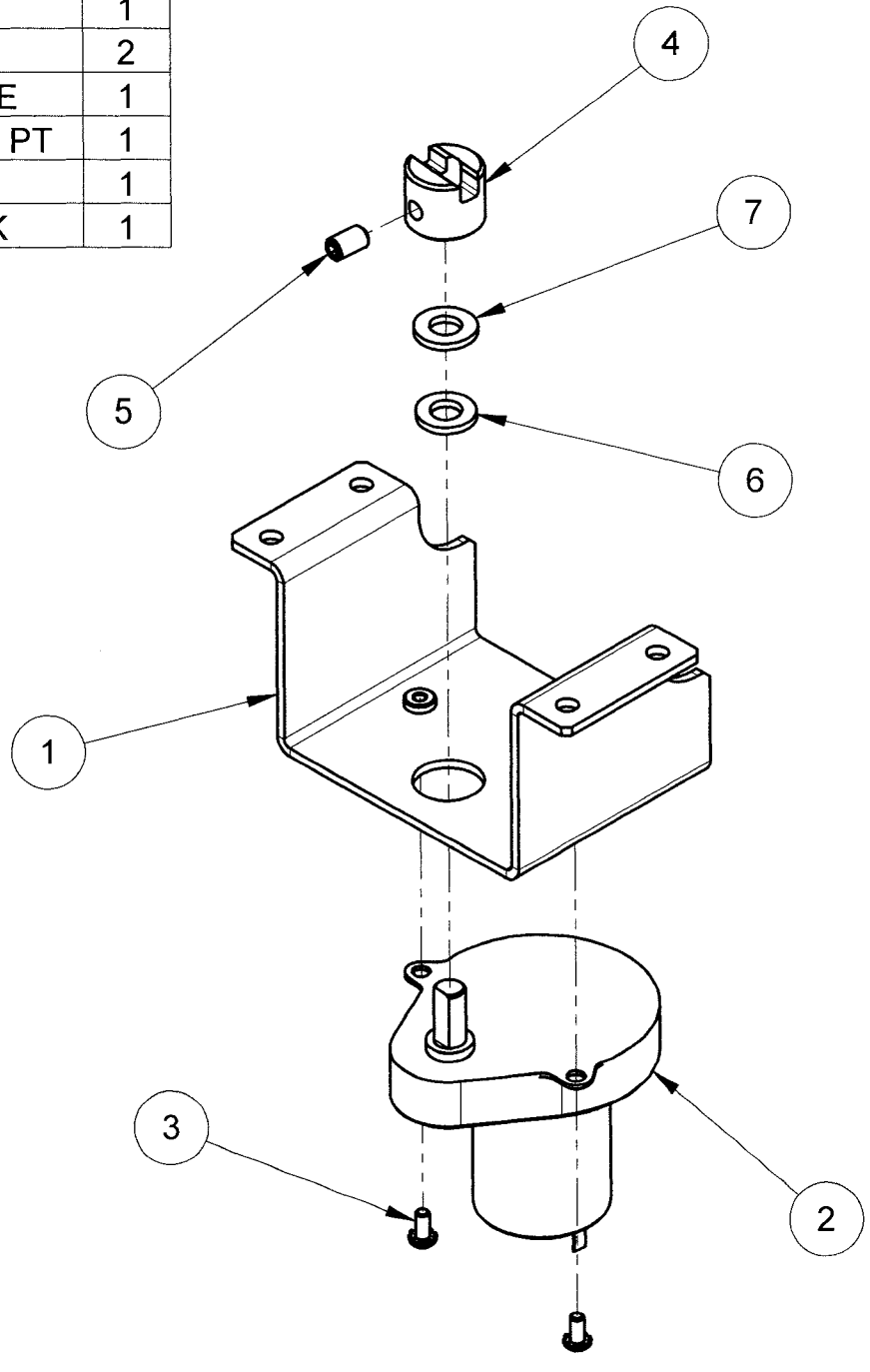

ITEM NO.	PART NUMBER	DESCRIPTION	QTY.
1	535-0987-00	BRACKET, DIV COIL MOUNT, BISCUIT	1
2	515-0213-00-ND	COIL ASSEMBLY, DIVERTER, BISCUIT	1
3	237-5975-00	SCREW, 8-32 X 3/8 HWH SWAGE ZN	1

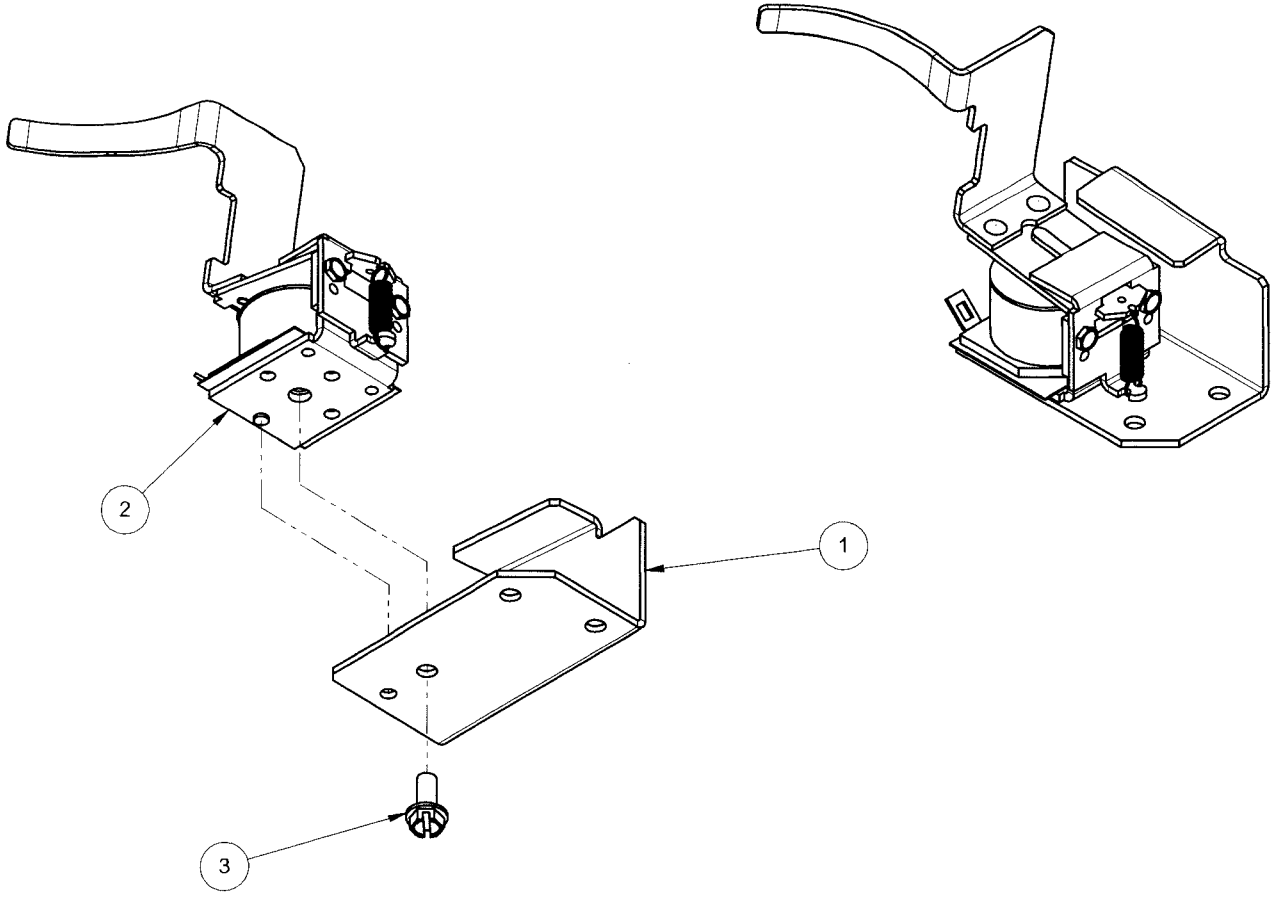

ASSEMBLY, PF DIVERTER, BISCUIT

500-9849-00

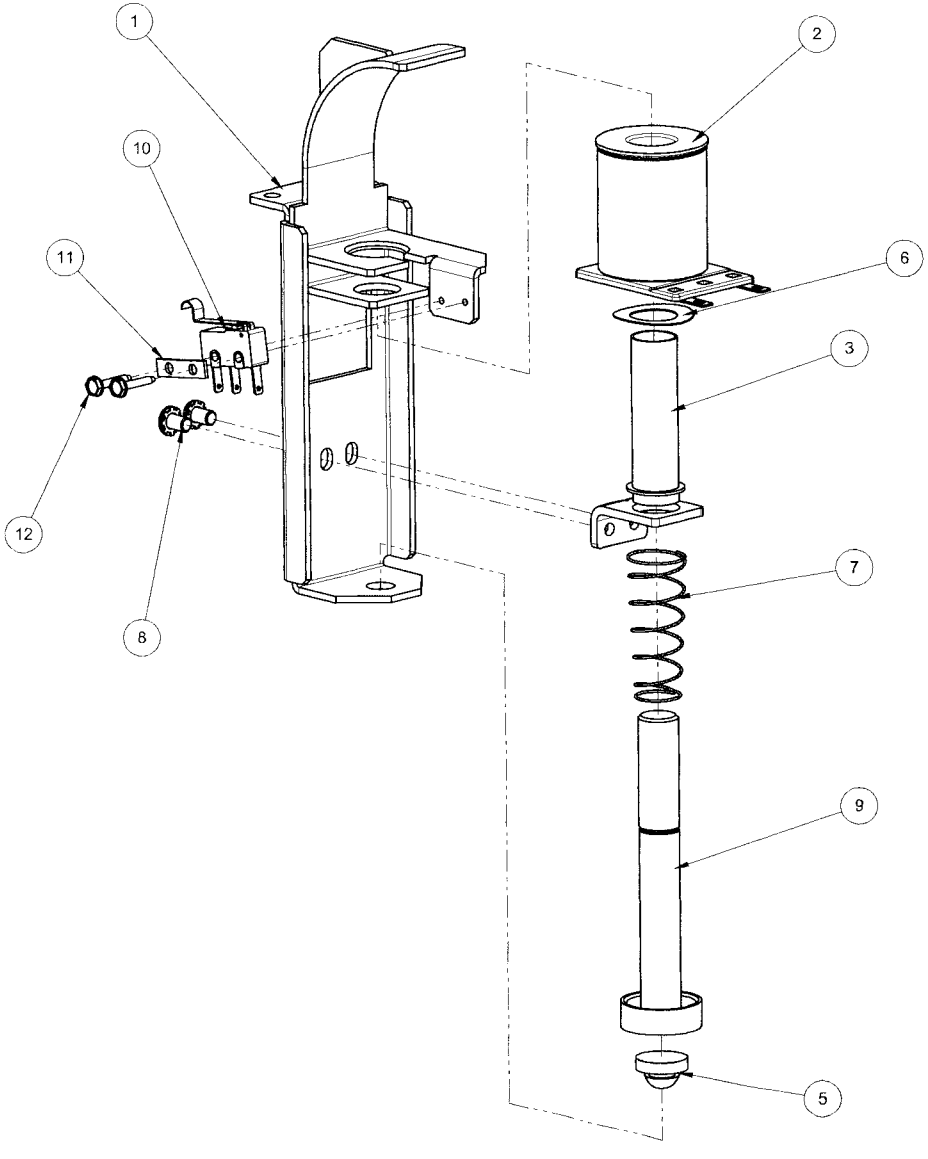

ITEM #	QTY	PART #	DESCRIPTION
1	1	535-9637-02	BRACKET - EJECT
2	1	090-5004-ND	COIL 27-1500 - NO DIODE
3	1	545-5076-01	COIL SLEEVE
4	1	535-5203-03	COIL RETAINING BRACKET
5	1	545-5105-00	RUBBER BUMPER
6	1	269-5002-00	SPRING WASHER
7	1	266-5020-00	COMPRESSION SPRING-CONICAL
8	2	232-5300-00	SCREW, 8-32 X 1/4" PPH SEMS
9	1	515-7309-00	PLUNGER ASSEMBLY
10	1	180-5209-00	SUB MINIATURE SWITCH - SIM. ROLLER
11	1	535-6539-00	SWITCH BODY PROTECT PLATE
12	2	237-5937-02	SCREW, 2-56 X 1/2" HWH MS
NOT SHN	1	036-5541-00	GENERIC COIL CABLE

EJECT VUK (VERTICAL UP-KICKER)

500-6846-02

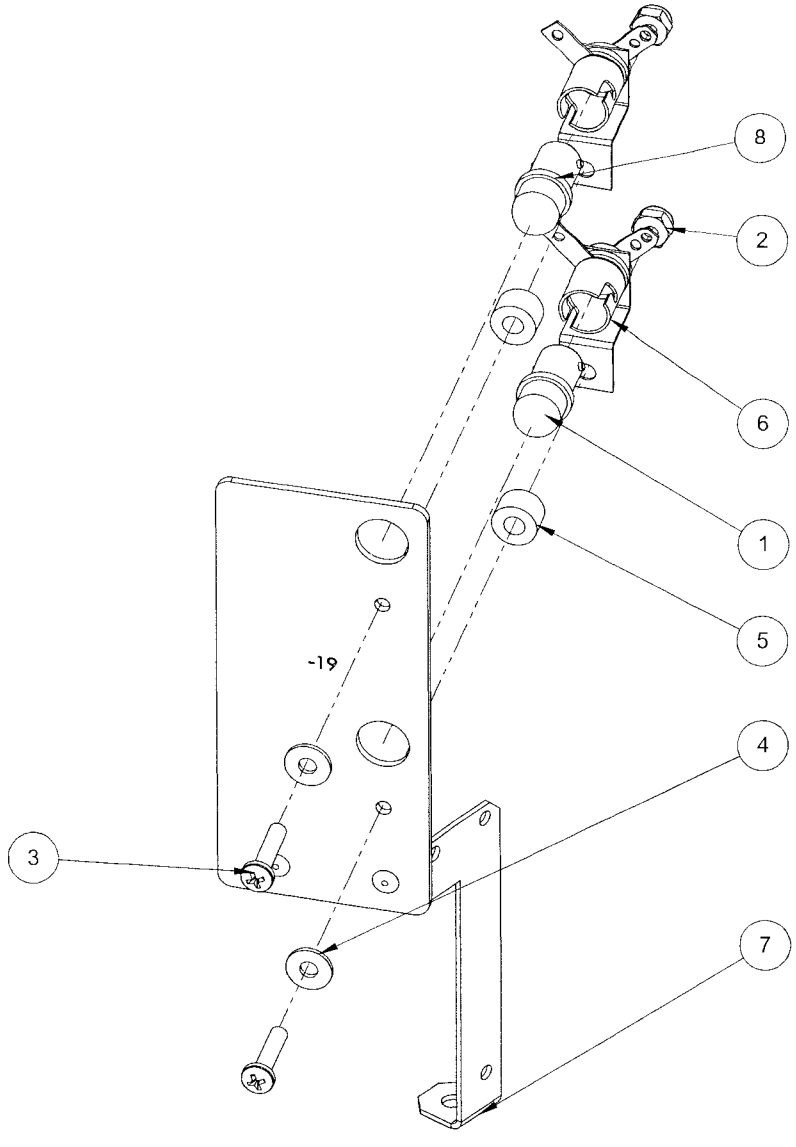

*NOT SHOWN

ITEM NO.	PART NUMBER	DESCRIPTION	QTY.
1	112-5034-05	DOUBLE LED, BAYONET BASE - BLUE	1
2	240-5005-00	6-32 NYLON STOP NUT	2
3	237-5503-01	SCREW, 6-32 X 5/8 PPH MS BLACK	2
4	242-5001-00	#6 WASHER	2
5	254-5000-09	NYLON SPACER - BLACK - 3/8 OD X .175 ID X 1/4"	2
6	077-5002-00	SOCKET - SHORT STAND-UP 2-LUG	2
7	510-7486-19	BILLBOARD RIVET ASSEMBLY-RAMP AND JACKPOT	1
8	112-5034-04	DOUBLE LED, BAYONET BASE - GREEN	1
*9	036-5607-11-F1	WIRE ASSEMBLY	1
*10	605-5002-00	SHRINK TUBING-1/8	.33
*11	040-5001-00B	WIRE TIE	2

BILLBOARD ASSEMBLY-RAMP AND JACKPOT

DRAWING NO.

511-7552-19

ITEM NO.	PART NUMBER	DESCRIPTION	QTY.
1	510-7486-20	BILL BOARD RIVET ASSEMBLY-360	1
2	077-5002-00	SOCKET - SHORT STAND-UP 2-LUG	2
3	240-5005-00	6-32 NYLON STOP NUT	2
4	112-5034-02	DOUBLE LED, BAYONET BASE - RED	2
5	237-5503-01	SCREW, 6-32 X 5/8 PPH MS BLACK	2
6	254-5000-09	NYLON SPACER - BLACK - 3/8 OD X .175 ID X 1/4"	2
7	242-5001-00	#6 WASHER	2
*8	036-5607-12-F1	WIRE ASSEMBLY	1
*9	605-5002-00	SHRINK TUBING 1/8	.33

*NOT SHOWN

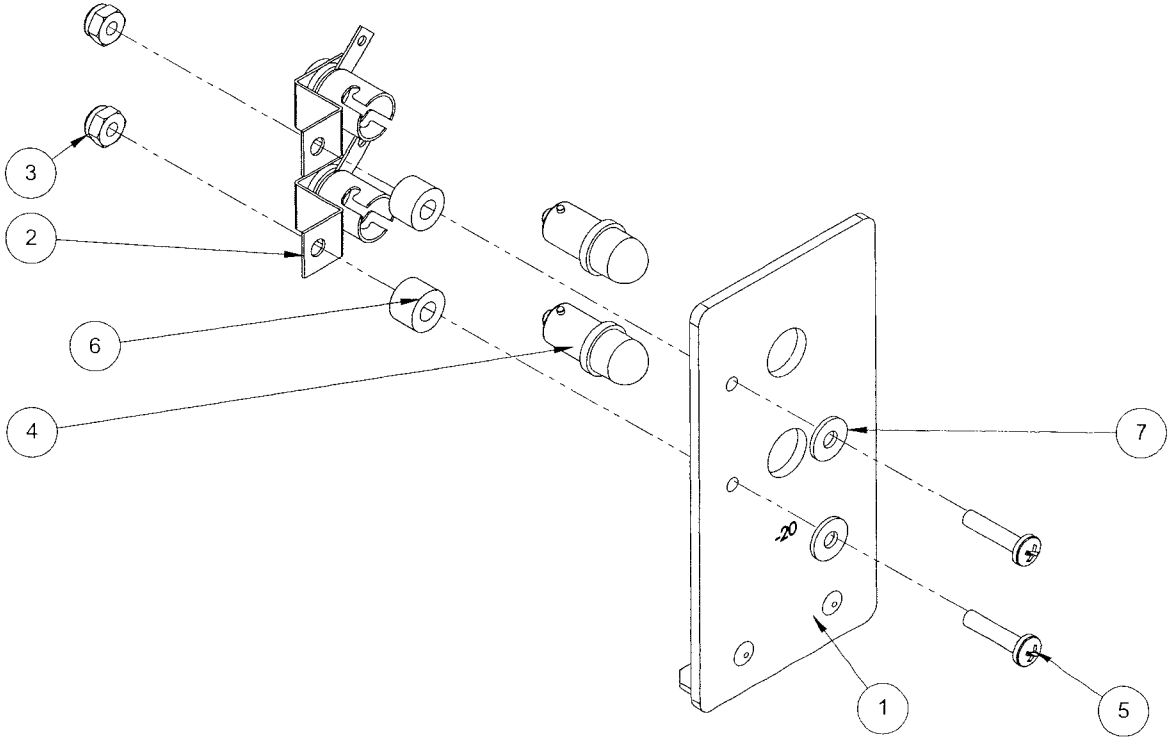

360 BILLBOARD ASSEMBLY

DRAWING NO.

511-7552-20

ITEM #	QTY	PART #	DESCRIPTION
1	1	830-6941-09	BUTY # 9 - BISCUIT
2	1	511-7552-20	360 BILLBOARD ASSEMBLY
3	2	242-5001-00	#6 WASHER
4	2	240-5005-00	6-32 NYLON STOP NUT
5	2	232-5201-00	SCREW, 6-32 X 3/8" PPH MS SEMS

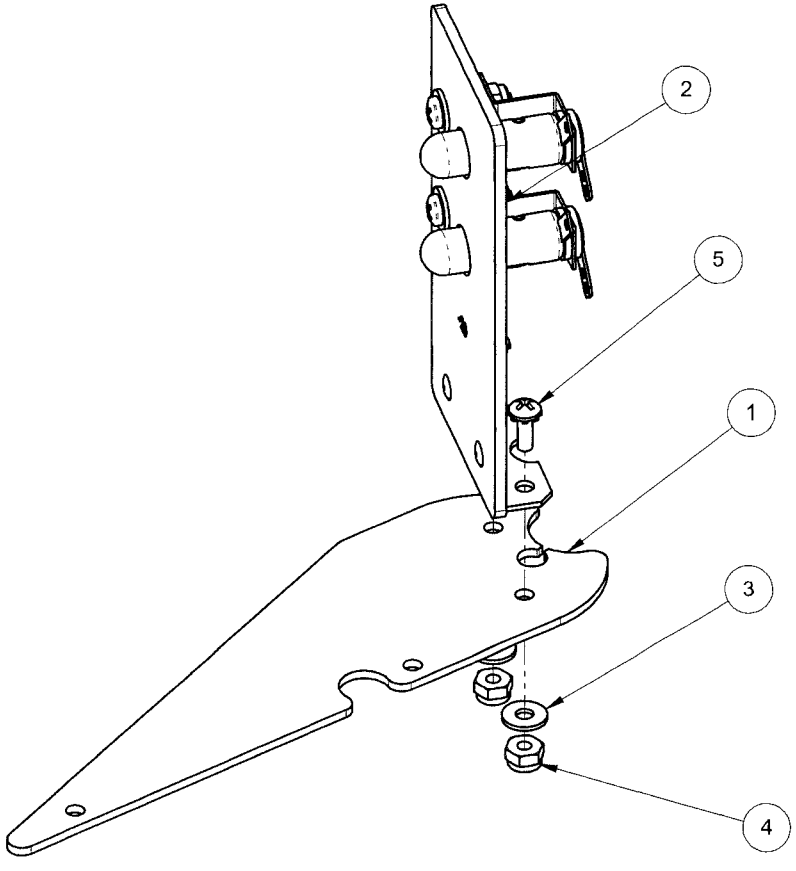

BUTY ASSEMBLY # 9 - BISCUIT L E

511-7552-09

ITEM NO.	PART NUMBER	DESCRIPTION	QTY.
1	510-7486-21	180 DEGREE BILLBOARD RIVET ASSEMBLY	1
2	077-5002-00	SOCKET - SHORT STAND-UP 2-LUG	3
3	240-5005-00	6-32 NYLON STOP NUT	3
4	112-5034-07	DOUBLE LED BAYONET BASE-ORANGE	3
5	237-5503-01	SCREW, 6-32 X 5/8 PPH MS BLACK	3
6	254-5000-09	NYLON SPACER - BLACK - 3/8 OD X .175 ID X 1/4"	3
7	242-5001-00	#6 WASHER	3
8	040-5000-03	1/4" CABLE CLAMP	1
*9	036-5607-10-F1	WIRE ASSEMBLY	1
*10	605-5002-00	SHRINK TUBING 1/8	.33

*NOT SHOWN

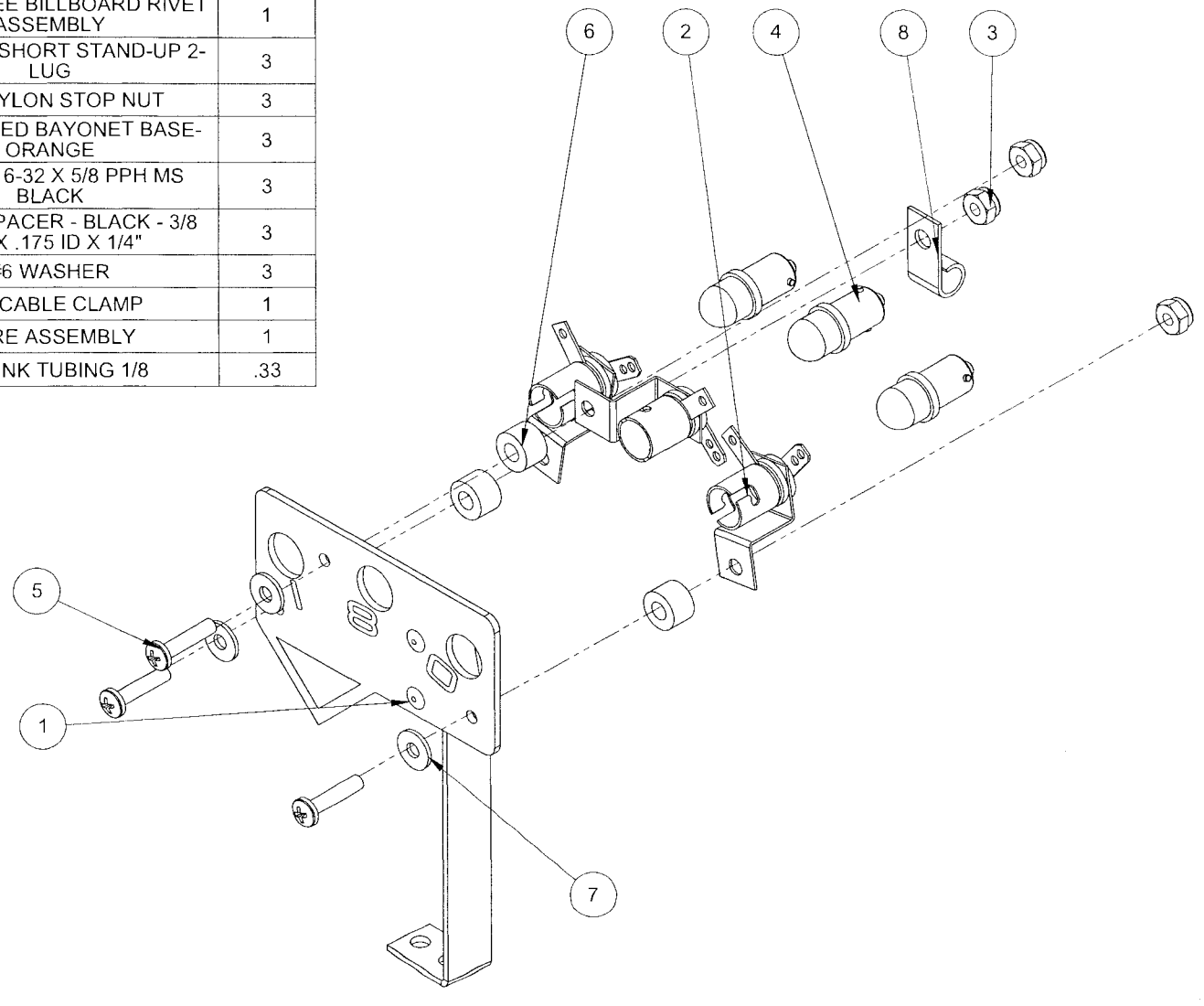

180 DEGREE BILLBOARD ASSEMBLY

DRAWING NO.

511-7552-21

ITEM NO.	PART NUMBER	DESCRIPTION	QTY.
1	510-7486-36	VUK BILLBOARD RIVET ASSEMBLY	1
2	520-5307-00	PCB, SINGLE LED	3
3	237-5816-01	SCREW, 4-40 X 1/2" PPH BLACK	3
4	240-5303-00	4-40 NYLON LOCK NUT	3
5	242-5002-00	#4 FLAT WASHER - 5/16" O.D.	3
6	550-7361-08	MIN DOME LED-WHITE	1
7	550-7361-02	MIN DOME LED-RED	1
8	550-7361-06	MIN DOME LED-YELLOW	1
*9	036-5607-13-F1	WIRE ASSEMBLY	1
*10	605-5004-01	SHRINK TUBING-1/4	.33

*NOT SHOWN

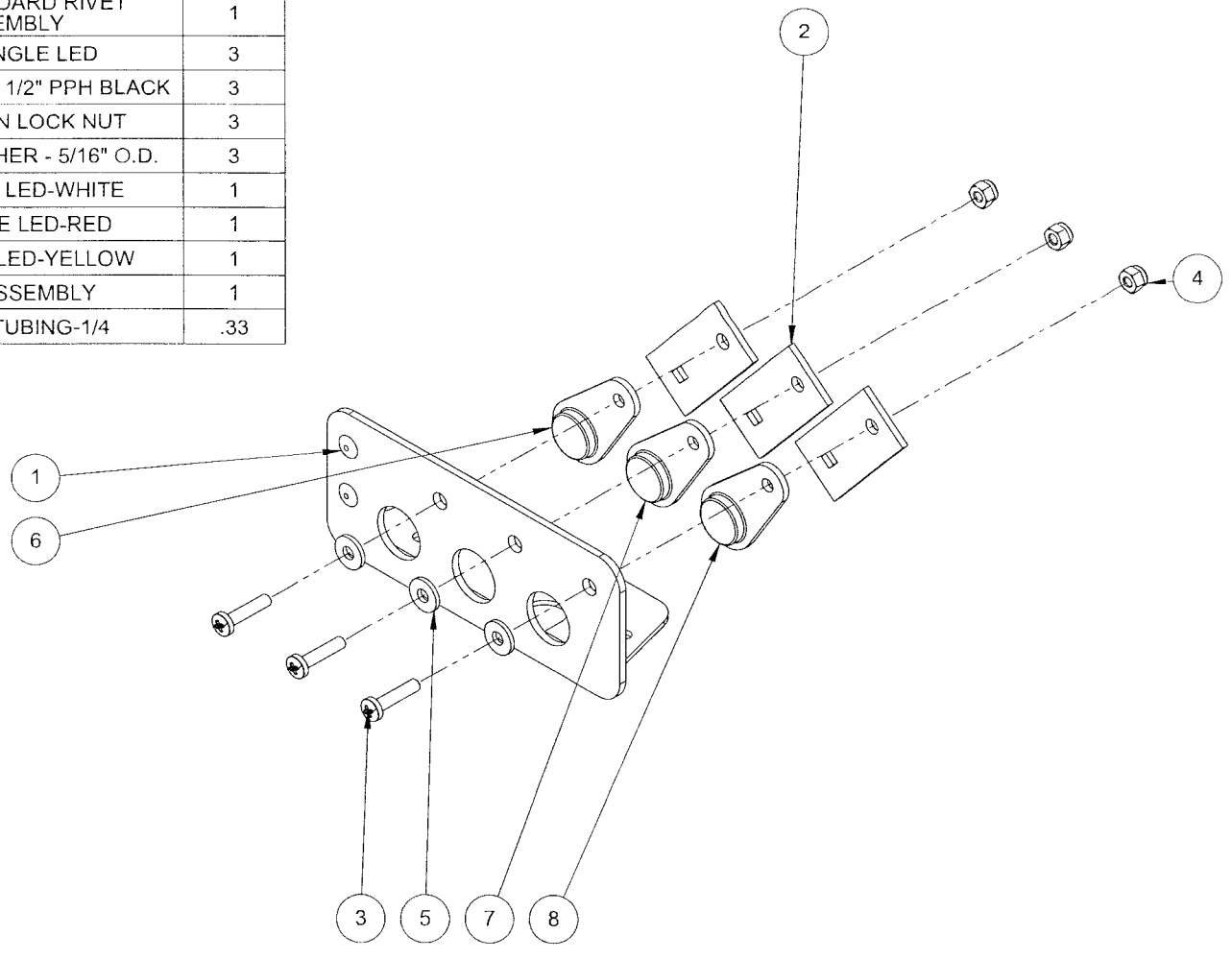

VUK BILLBOARD ASSEMBLY-LE

DRAWING NO.

511-7552-36

ITEM NO.	PART NUMBER	DESCRIPTION	QTY.
1	535-0836-00	DUAL TARGET BRKT	1
2	515-7498-02-01	RECT. TARGET & SWITCH ASSY - RT SIDE LUGS - RED	1
3	535-9823-01	SWITCH BACK PLATE	2
4	237-5976-04	SCREW, 6-32 X 5/8" HWH SWAGE	4
5	626-5078-00	3/16" FOAM PAD	2
6	515-7498-05-00	RECT. TARGET & SWITCH ASSY - LFT SIDE LUGS - BLUE	1

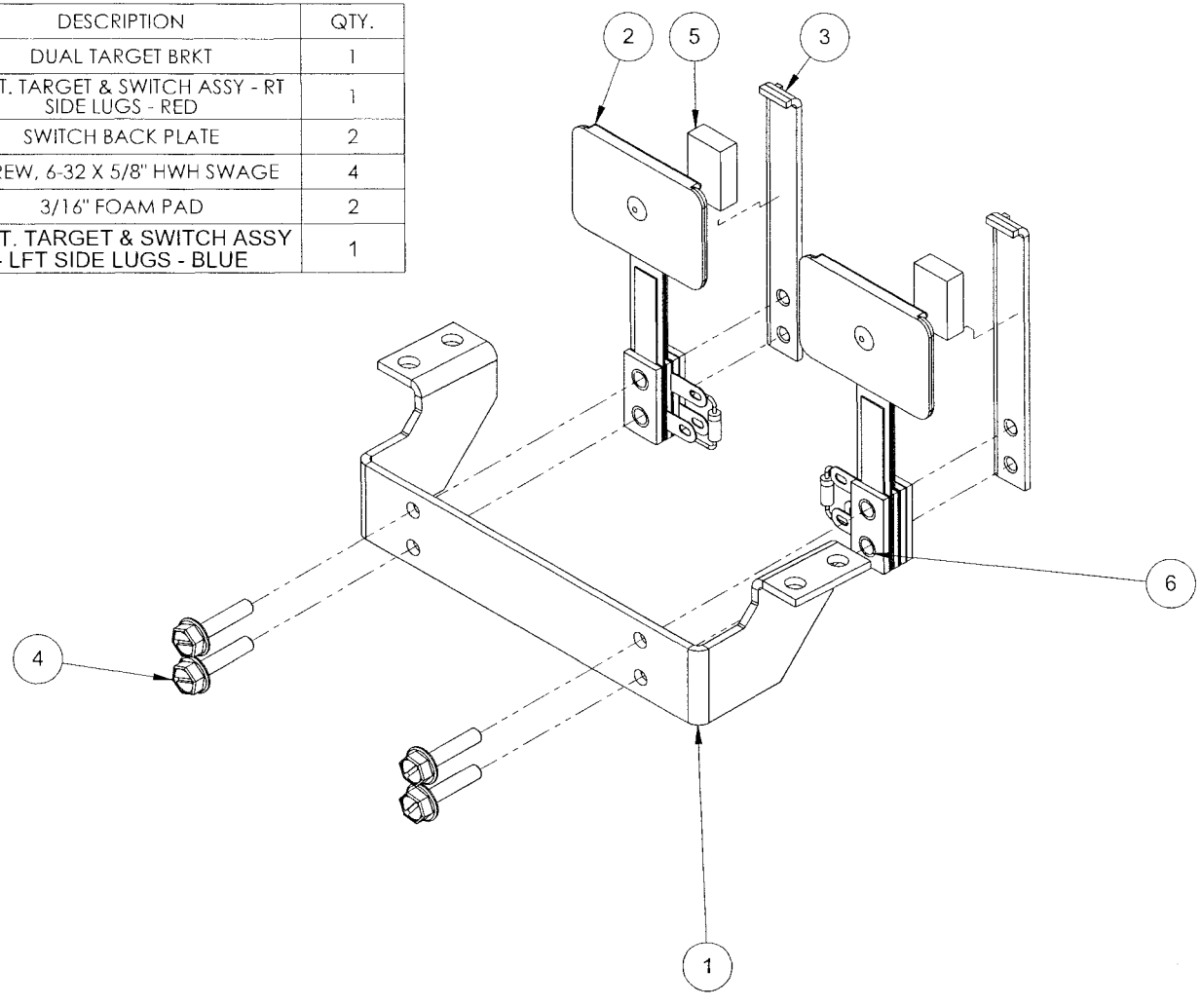

ASSEMBLY, DUAL S/U TARGET,

DRAWING NO.

500-9870-00

ITEM #	QTY	PART #	DESCRIPTION
1	1	830-6941-50	CAR BUTY-RAMPS
2	2	254-5000-19	NYLON SPACER - BLACK - 3/8 OD X .175 ID X 1/8"
3	1	880-6153-01	MUSTANG TOY CAR - GT
4	2	237-5840-00	SCREW, #4 X 1/2" PFH AB

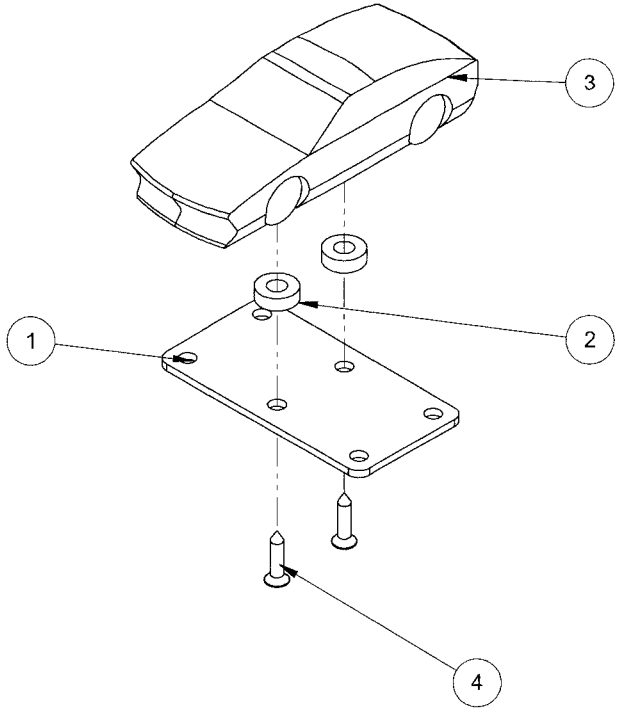

CAR ASSEMBLY-RAMPS-MUSTANG L E

511-7552-50

ITEM #	QTY	PART #	DESCRIPTION
1	1	545-7857-01	LEFT RAMP - BISCUIT
2	1	535-0967-01	OPTO BOARD BRACKET
3	2	500-6775-01	OPTO TRANSCEIVER ASSY, 15" LEADS
4	4	237-5980-00	SCREW, #6 X 3/8 PPH T-25
5	2	237-5983-02	SCREW, 4-40 x 1/4" PFH MS - BLACK
6	1	545-5105-00	RUBBER BUMPER
7	1	511-7552-09	BUTY ASSEMBLY # 9 - BISCUIT L E
8	11	242-5001-00	#6 WASHER
9	9	240-5005-00	6-32 NYLON STOP NUT
10	2	232-5202-00	SCREW, 6-32 X 1/2" PPH MS SEMS
11	1	511-7552-33	BUTY ASSEMBLY # 33 - RAMP FLASHER - BISCUIT L E
12	2	254-5000-19	NYLON SPACER - BLACK - 3/8 OD X .175 ID X 1/8"
13	2	232-5203-00	SCREW, 6-32 X 5/8" PPH SEMS ZINC
14	1	535-0851-09	BALL GUIDE # 9 - LEFT RAMP
15	1	232-5201-00	SCREW, 6-32 X 3/8" PPH MS SEMS
16	1	511-7552-50	CAR ASSEMBLY-RAMPS-MUSTANG L E
17	4	254-5000-01	NYLON SPACER - BLACK - 3/8 OD X .175 ID X 1/2"
18	4	237-5508-00	SCREW, 6-32 X 1" PPH MS
19	1	040-5002-00	MOUNTING PAD

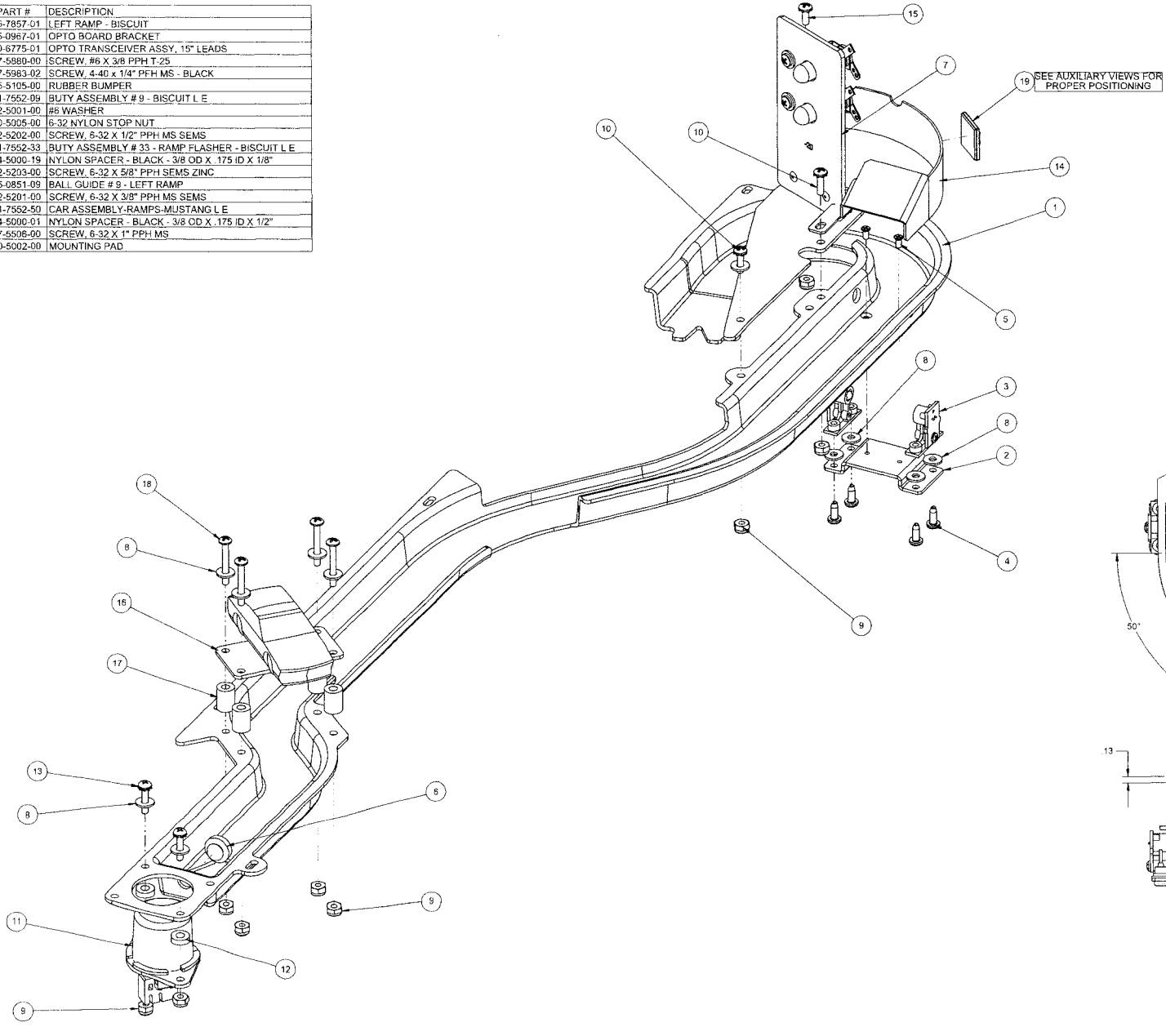

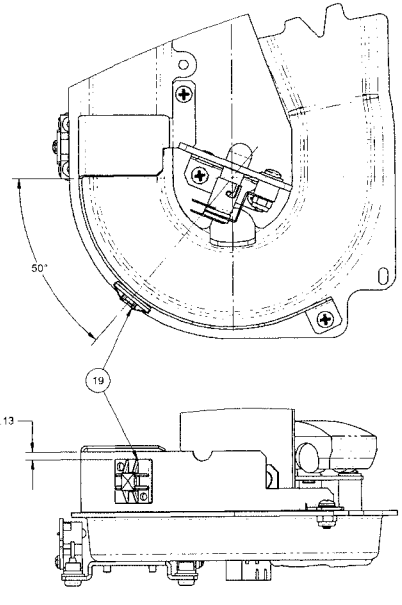

LEFT RAMP ASSEMBLY - BISCUIT L E

500-9835-01

ITEM #	QTY	PART #	DESCRIPTION
1	1	545-7857-01	LEFT RAMP - BISCUIT
2	1	535-0967-01	OPTO BOARD BRACKET
3	2	500-6775-01	OPTO TRANSCEIVER ASSY, 15" LEADS
4	4	237-5880-00	SCREW, #6 X 3/8 PPH T-25
5	2	237-5983-02	SCREW, 4-40 x 1/4" PFH MS - BLACK
6	1	545-5105-00	RUBBER BUMPER
7	1	511-7552-09	BUTY ASSEMBLY # 9 - BISCUIT L E
8	11	242-5001-00	#6 WASHER
9	9	240-5005-00	6-32 NYLON STOP NUT
10	2	232-5202-00	SCREW, 6-32 X 1/2" PPH MS SEMS
11	1	511-7552-33	BUTY ASSEMBLY # 33 - RAMP FLASHER - BISCUIT L E
12	2	254-5000-19	NYLON SPACER - BLACK - 3/8 OD X .175 ID X 1/8"
13	2	232-5203-00	SCREW, 6-32 X 5/8" PPH SEMS ZINC
14	1	535-0851-09	BALL GUIDE # 9 - LEFT RAMP
15	1	232-5201-00	SCREW, 6-32 X 3/8" PPH MS SEMS
16	1	511-7554-50	CAR ASSEMBLY-RAMPS-MUSTANG PREMIUM
17	4	254-5000-01	NYLON SPACER - BLACK - 3/8 OD X .175 ID X 1/2"
18	4	237-5506-00	SCREW, 6-32 X 1" PPH MS
19	1	040-5002-00	MOUNTING PAD

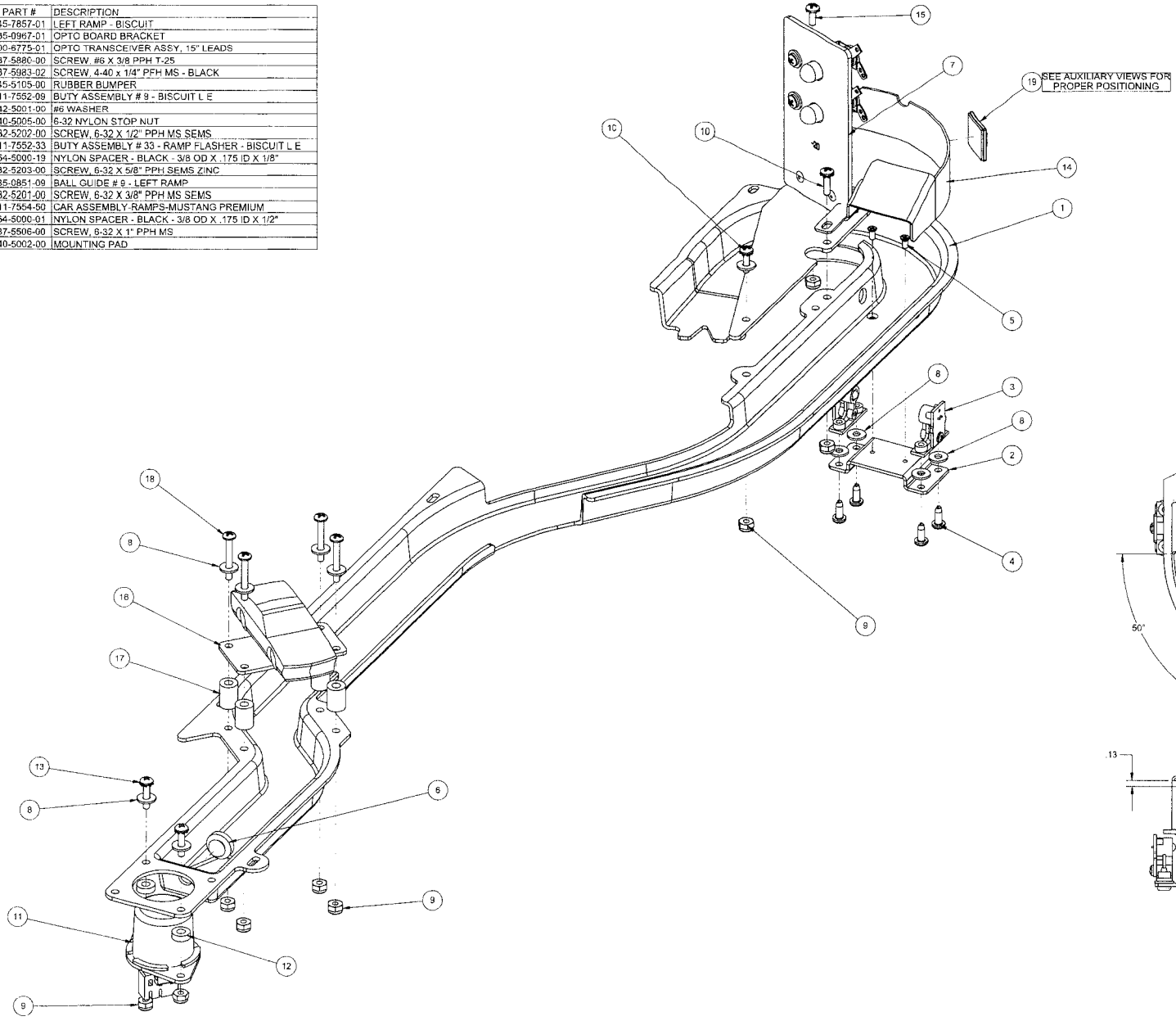

LEFT RAMP ASSEMBLY - MUSTANG PREMIUM

500-9835-02

ITEM #	QTY	PART #	DESCRIPTION
1	1	830-6941-50	CAR BUTY-RAMPS
2	2	254-5000-19	NYLON SPACER - BLACK - 3/8 OD X .175 ID X 1/8"
3	1	880-6158-01	MUSTANG TOY CAR - BOSS 302
4	2	237-5840-00	SCREW, #4 X 1/2" PFH AB

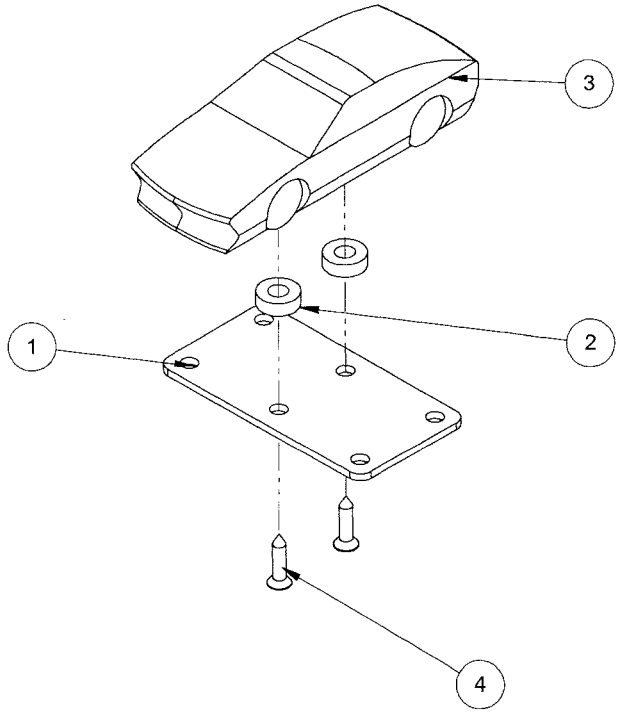

CAR ASSEMBLY-RAMPS-MUSTANG PREMIUM

511-7554-50

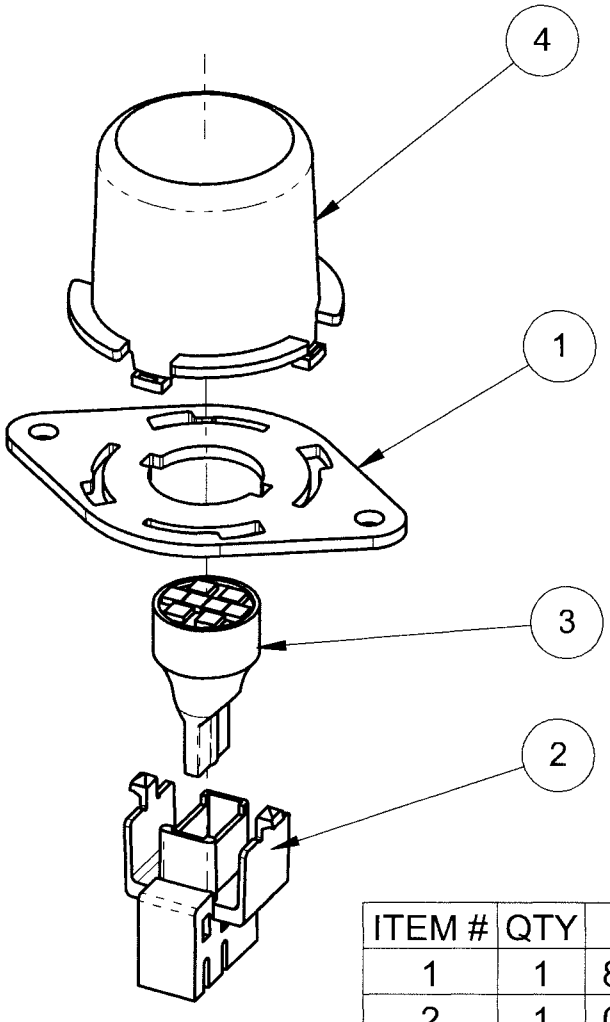

ITEM #	QTY	PART #	DESCRIPTION
1	1	830-6941-33	BUTY # 33
2	1	077-5216-01	LAMP SOCKET - WEDGE, IDC SNAP-ON W/JUMPER
3	1	113-5033-08	8 ELEMENT FLAT W-BASE LED - WHITE
4	1	550-5030-06	MINI MARS CAP, SNAP-IN, YELLOW

BUTY ASSEMBLY # 33 - RAMP FLASHER - BISCUIT L E

511-7552-33

ITEM #	QTY	PART #	DESCRIPTION
1	1	545-7858-00	RIGHT RAMP - BISCUIT PRO
2	2	500-6775-01	OPTO TRANSCEIVER ASSY, 15" LEADS
3	4	237-5880-00	SCREW, #6 X 3/8 PPH T-25
4	3	254-5000-09	NYLON SPACER - BLACK - 3/8 OD X .175 ID X 1/4"
5	7	240-5005-00	6-32 NYLON STOP NUT
6	1	830-6941-35	BUTY #35 - RAMP COVER
7	7	242-5001-00	#6 WASHER
8	2	232-5204-00	SCREW, 6-32 X 3/4" PPH SEMS
9	2	237-5872-00	SCREW, 2-56 X 3/8 PPH SEMS
10	1	535-0895-00	BALL DEFLECTOR - RIGHT RAMP
11	2	240-5321-00	2-56 NYLON LOCK NUT
12	1	511-7552-50	CAR ASSEMBLY-RAMPS-MUSTANG L E
13	4	237-5501-00	SCREW, 6-32 X 3/8" PPH MS ZINC
14	1	232-5206-00	SCREW, 6-32 X 1" PPH SEMS
15	1	820-5815-00	MYLAR PAD

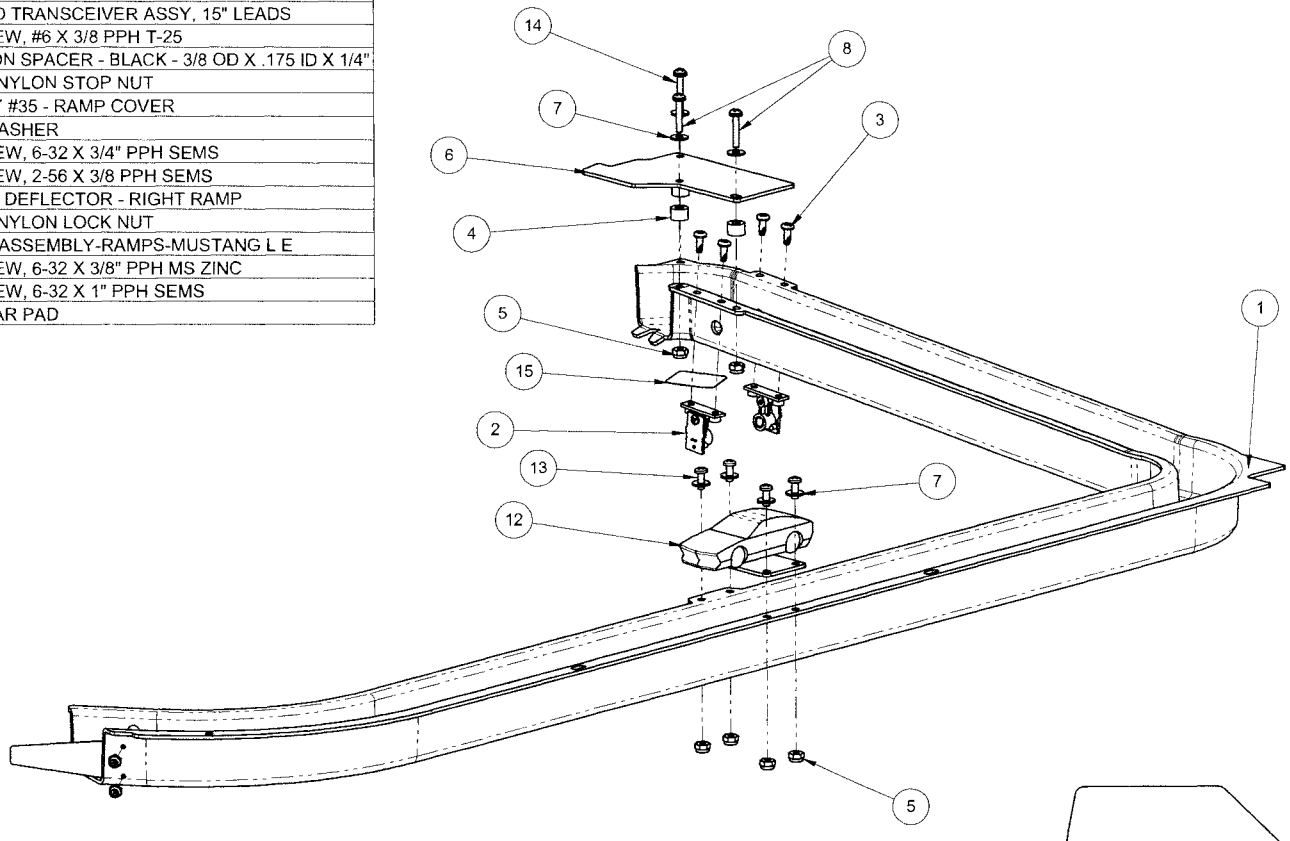

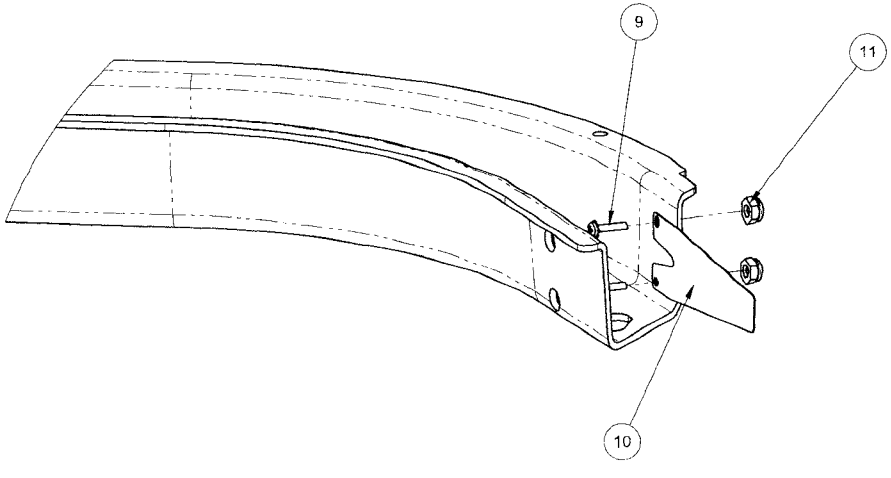

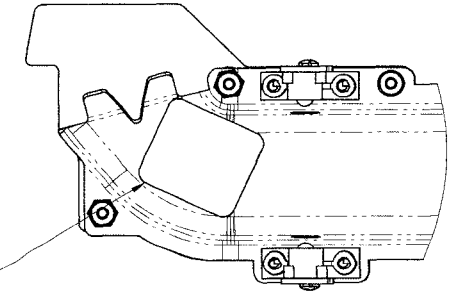

15 INSTALL MYLAR PAD APPROXIMATELY AS SHOWN

SUPERCHARGER RAMP ASSEMBLY - BISCUIT L E

500-9836-01

ITEM #	QTY	PART #	DESCRIPTION
1	1	545-7858-00	RIGHT RAMP - BISCUIT PRO
2	2	500-6775-01	OPTO TRANSCEIVER ASSY, 15" LEADS
3	4	237-5880-00	SCREW, #6 X 3/8 PPH T-25
4	3	254-5000-09	NYLON SPACER - BLACK - 3/8 OD X .175 ID X 1/4"
5	7	240-5005-00	6-32 NYLON STOP NUT
6	1	830-6941-35	BUTY #35 - RAMP COVER
7	7	242-5001-00	#6 WASHER
8	2	232-5204-00	SCREW, 6-32 X 3/4" PPH SEMS
9	2	237-5872-00	SCREW, 2-56 X 3/8 PPH SEMS
10	1	535-0895-00	BALL DEFLECTOR - RIGHT RAMP
11	2	240-5321-00	2-56 NYLON LOCK NUT
12	1	511-7554-50	CAR ASSEMBLY-RAMPS-MUSTANG PREMIUM
13	4	237-5501-00	SCREW, 6-32 X 3/8" PPH MS ZINC
14	1	232-5206-00	SCREW, 6-32 X 1" PPH SEMS
15	1	820-5815-00	MYLAR PAD

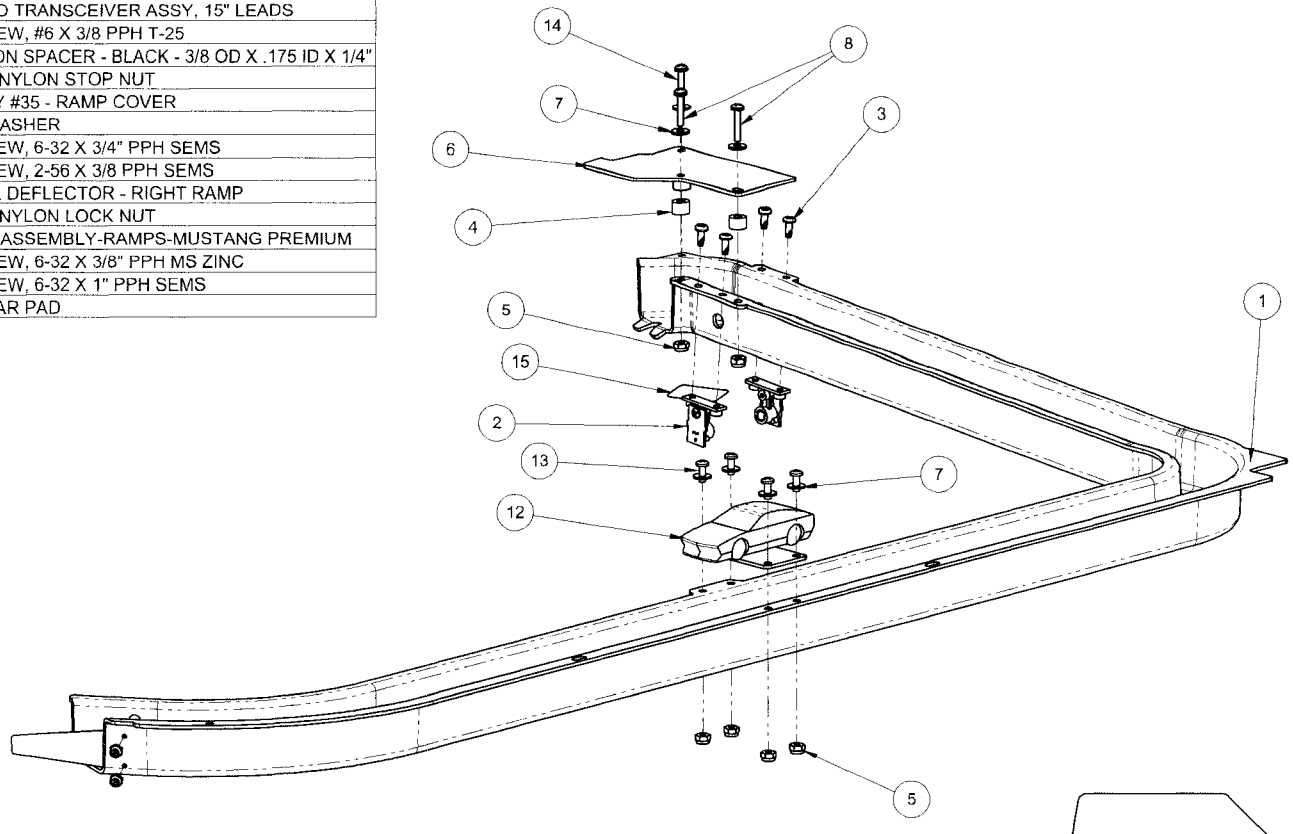

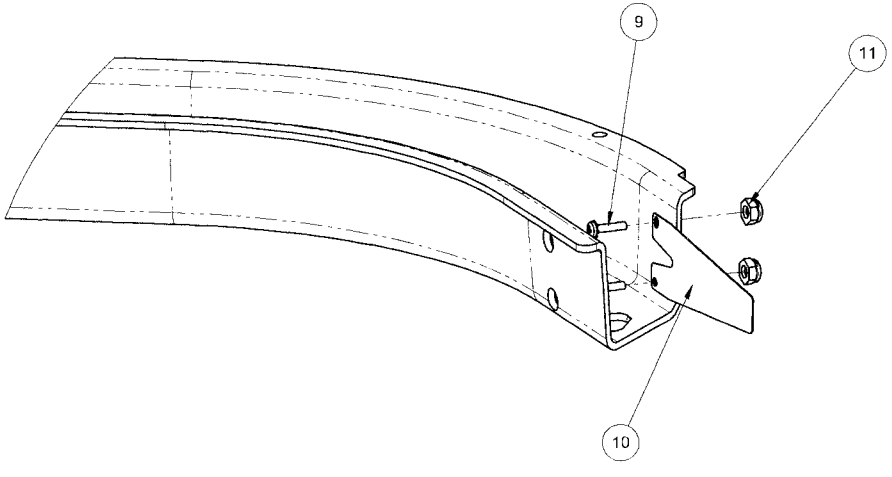

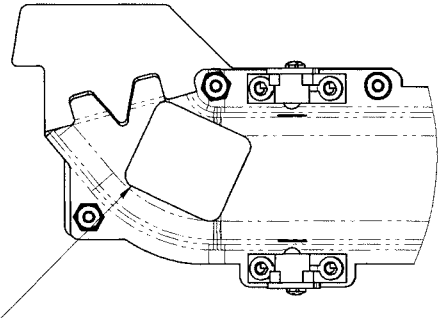

SUPERCHARGER RAMP ASSEMBLY - MUSTANG PREMIUM

500-9836-02

ITEM #	QTY	PART #	DESCRIPTION
1	1	545-7858-01	BONUS BOWL - BISCUIT
2	1	180-5057-00	MICRO-SWITCH
3	2	830-6117-00	SWITCH SPACER
4	2	237-6064-00	2-56 x 3/4 PHILLIPS PAN HEAD ZINC
5	1	535-6539-00	SWITCH BODY PROTECT PLATE
6	2	240-5321-00	2-56 NYLON LOCK NUT
7	2	240-5005-00	6-32 NYLON STOP NUT
8	2	242-5001-00	#6 WASHER
9	2	232-5206-00	SCREW, 6-32 X 1" PPH SEMS
10	2	254-5000-12	NYLON SPACER - BLACK - 3/8 OD X .175 ID X 3/8"
11	1	511-7552-33	BUTY ASSEMBLY # 33 - RAMP FLASHER - BISCUIT L E

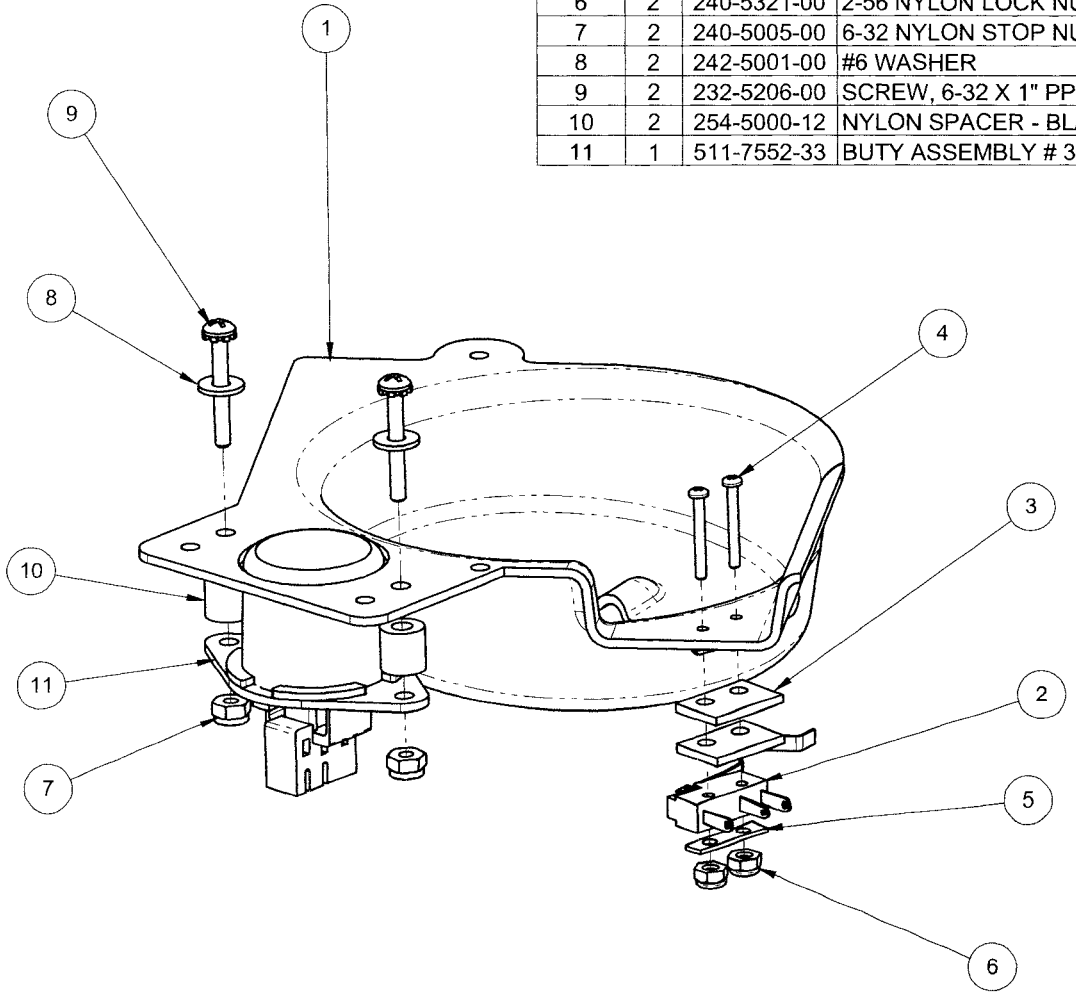

BONUS BOWL ASSEMBLY - BISCUIT L E

500-7284-01

ITEM #	QTY	PART #	DESCRIPTION
1	1	535-0851-07	BALL GUIDE # 7 - INSIDE LH TOP LOOP
2	1	232-5301-00	SCREW, 8-32 X 3/8" PPH SEMS
3	1	237-5975-01	SCREW, 8-32 x 1/2 HWH SLOT SERR SW ZINC
4	2	242-5005-00	#8 WASHER
5	1	254-5084-01	PIVOT STANDOFF - 1-3/8"
6	1	510-7474-01	RIVETED ASSEMBLY - LOWER RAMP
7	3	242-5012-00	WASHER, 1/4 X 7/16 X 1/32

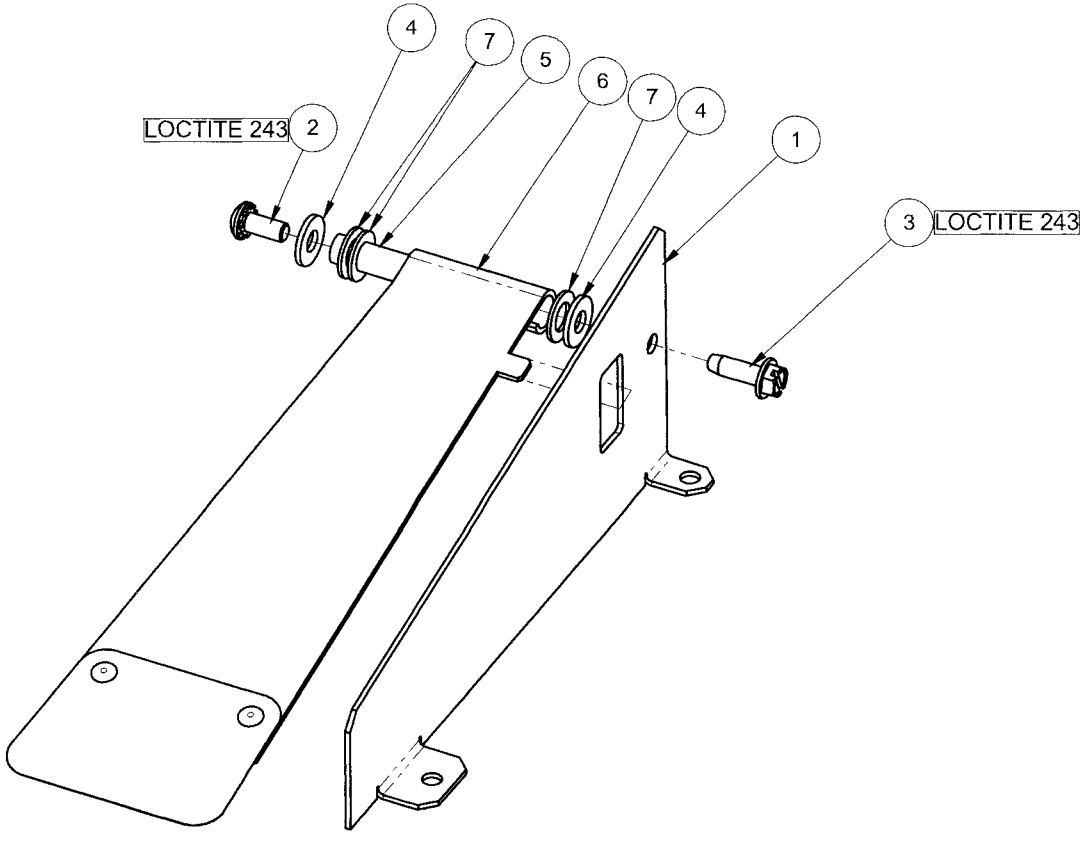

LOWER RAMP ASSEMBLY

500-9837-01

ITEM #	QTY	PART #	DESCRIPTION
1	1	515-9747-00	COIL BRACKET ASSEMBLY
2	1	530-7878-00	STEEL PLUNGER
3	1	545-5388-00	COIL SLEEVE
4	1	090-5083-00-ND	COIL - PRI-SEC - NO DIODE
5	2	535-7356-00	COIL BRACKET
6	1	270-5005-00	RETAINING E-RING, 7/16" SHAFT OD
7	1	266-5102-01	COMPRESSION SPRING
8	1	242-5081-00	WASHER - NYLON .75 OD x .44 ID
9	1	545-5418-01	NYLINER - PLASTIC, 7/16"
10	1	269-5002-00	SPRING WASHER
11	2	242-5005-00	#8 WASHER
12	1	530-7854-00	RAMP LIFT ROD - UPPER
13	4	237-5975-00	SCREW, 8-32 X 3/8 HWH SWAGE ZN
NOT SHN	1	036-5607-09-F1	CABLE ASSEMBLY

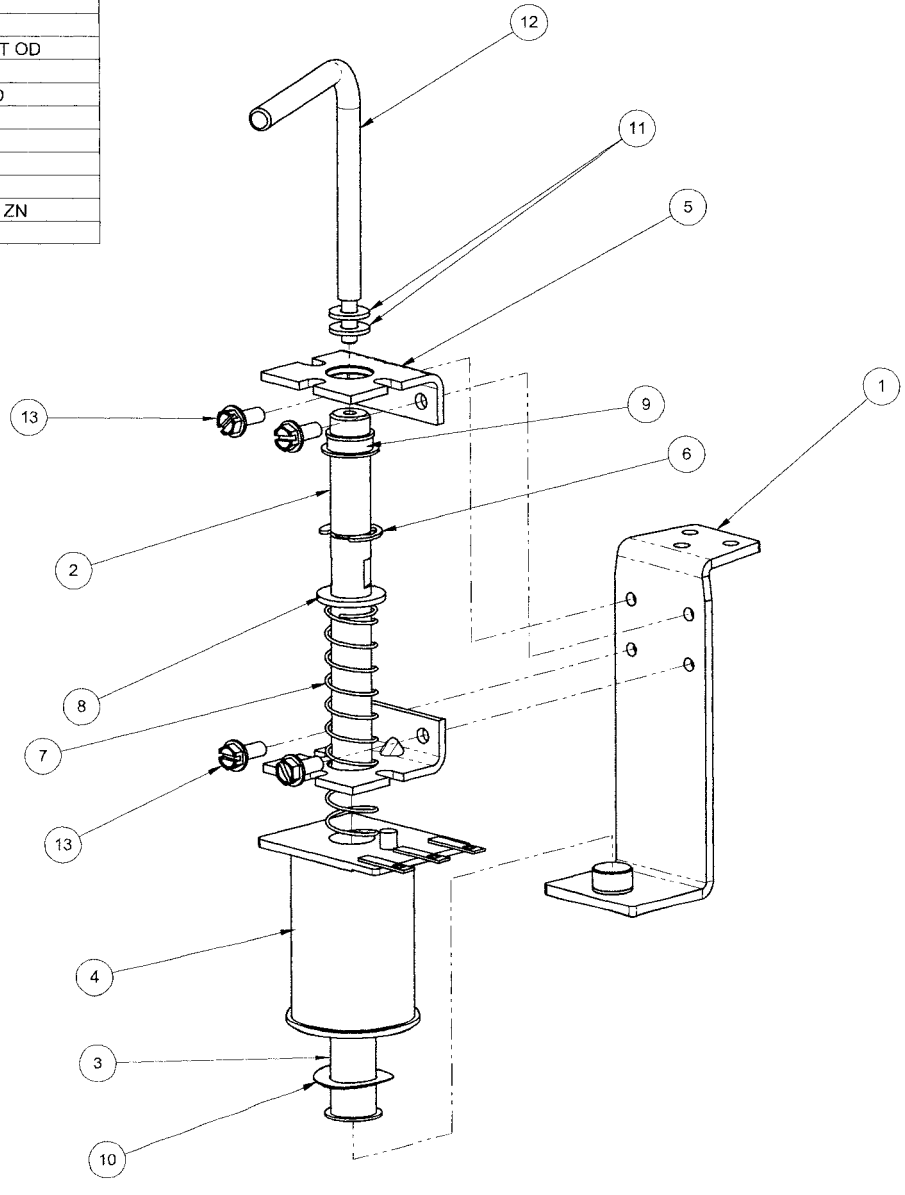

ACTUATOR ASSEMBLY - UPPER RAMP - BISCUIT

500-9871-00

ITEM #	QTY	PART #	DESCRIPTION
1	1	515-9747-00	COIL BRACKET ASSEMBLY
2	1	530-7878-00	STEEL PLUNGER
3	1	545-5388-00	COIL SLEEVE
4	1	090-5083-00-ND	COIL - PRI-SEC - NO DIODE
5	2	535-7356-00	COIL BRACKET
6	1	270-5005-00	RETAINING E-RING, 7/16" SHAFT OD
7	1	266-5102-01	COMPRESSION SPRING
8	1	242-5081-00	WASHER - NYLON .75 OD x .44 ID
9	1	545-5418-01	NYLINER - PLASTIC, 7/16"
10	1	269-5002-00	SPRING WASHER
11	1	242-5005-00	#8 WASHER
12	1	530-7853-00	RAMP LIFT ROD - LOWER
13	4	237-5975-00	SCREW, 8-32 X 3/8 HWH SWAGE ZN
NOT SHN	1	036-5607-08-F1	CABLE ASSEMBLY

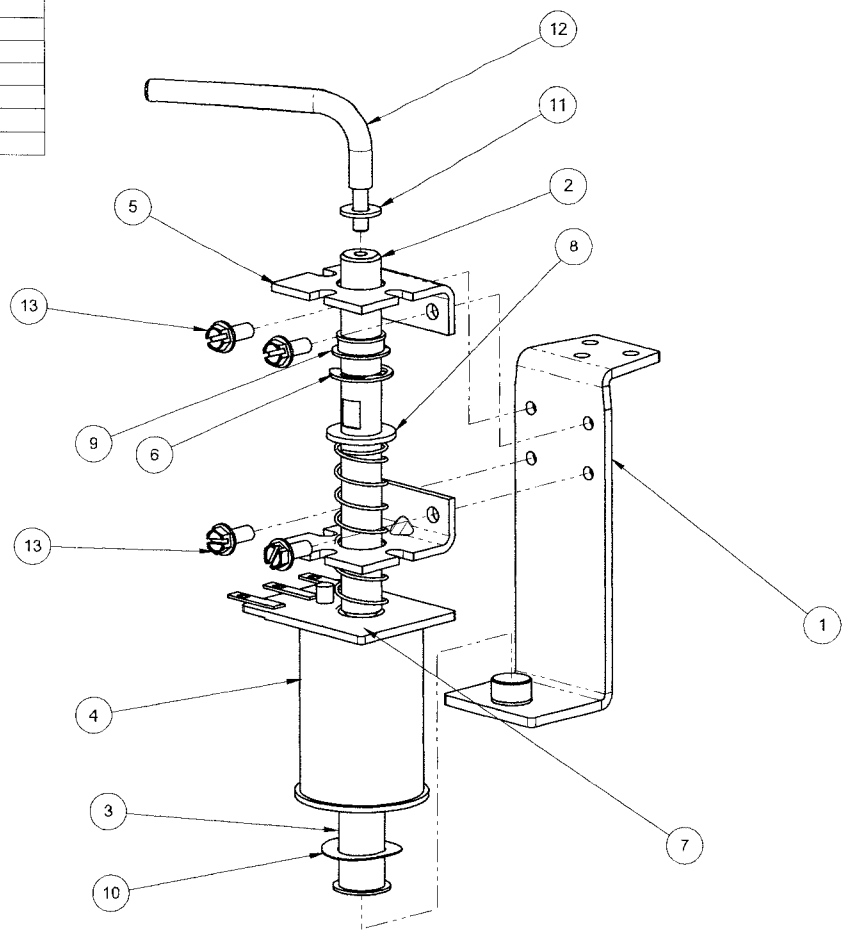

ACTUATOR ASSEMBLY - UPPER RAMP - BISCUIT

500-9871-01

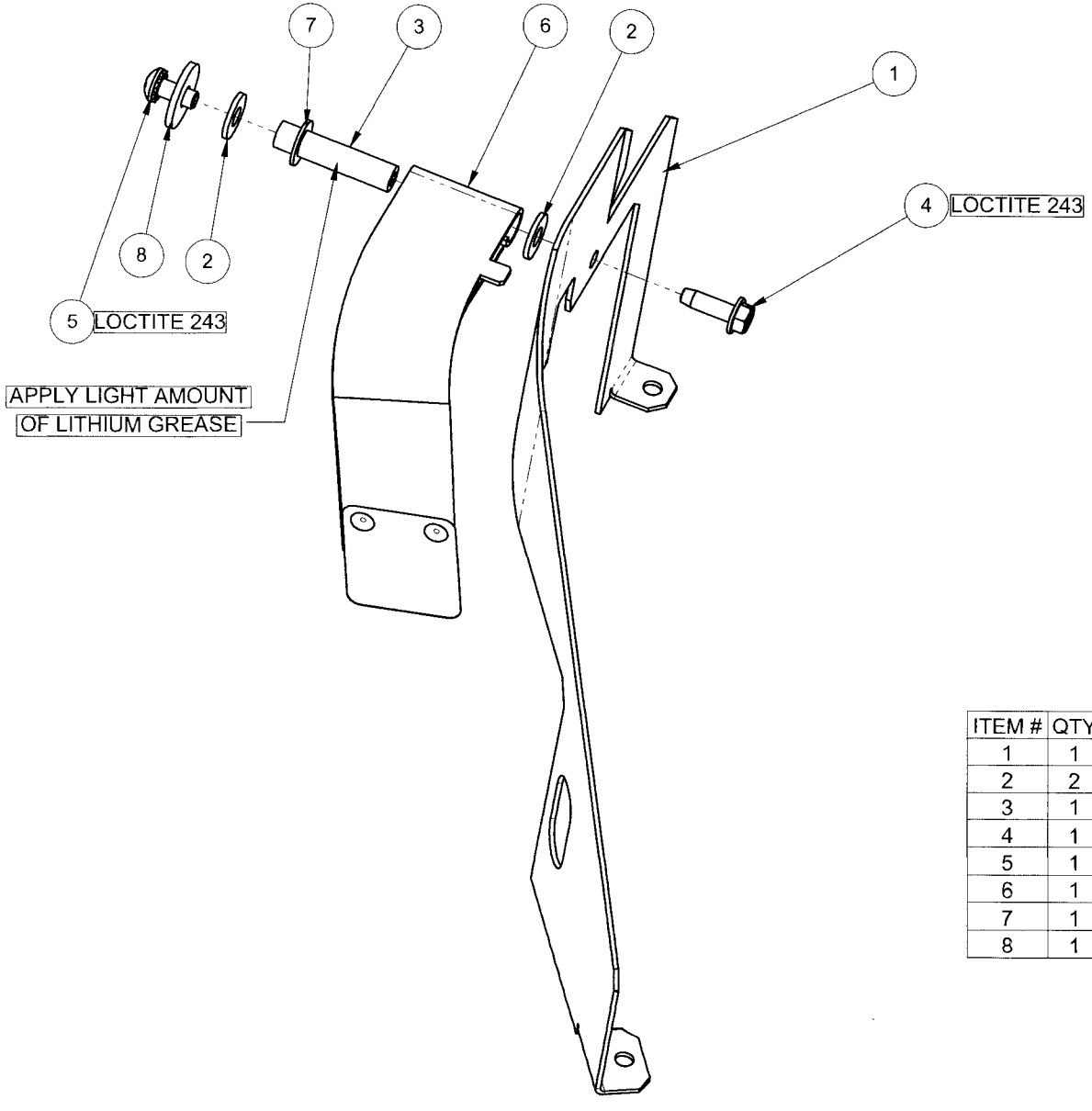

ITEM #	QTY	PART #	DESCRIPTION
1	1	535-0854-05	RAMP WALL - INSIDE L.H. - UPPER
2	2	242-5005-00	#8 WASHER
3	1	254-5084-00	PIVOT STANDOFF - 1-1/8"
4	1	237-5975-01	SCREW, 8-32 x 1/2 HWH SLOT SERR SW ZINC
5	1	232-5301-00	SCREW, 8-32 X 3/8" PPH SEMS
6	1	510-7474-00	RIVETED ASSEMBLY - UPPER RAMP
7	1	242-5012-00	WASHER, 1/4 X 7/16 X 1/32
8	1	242-5038-00	WASHER 13/64 ID X 5/8 OD X 1/16

UPPER RAMP ASSEMBLY

500-9837-00

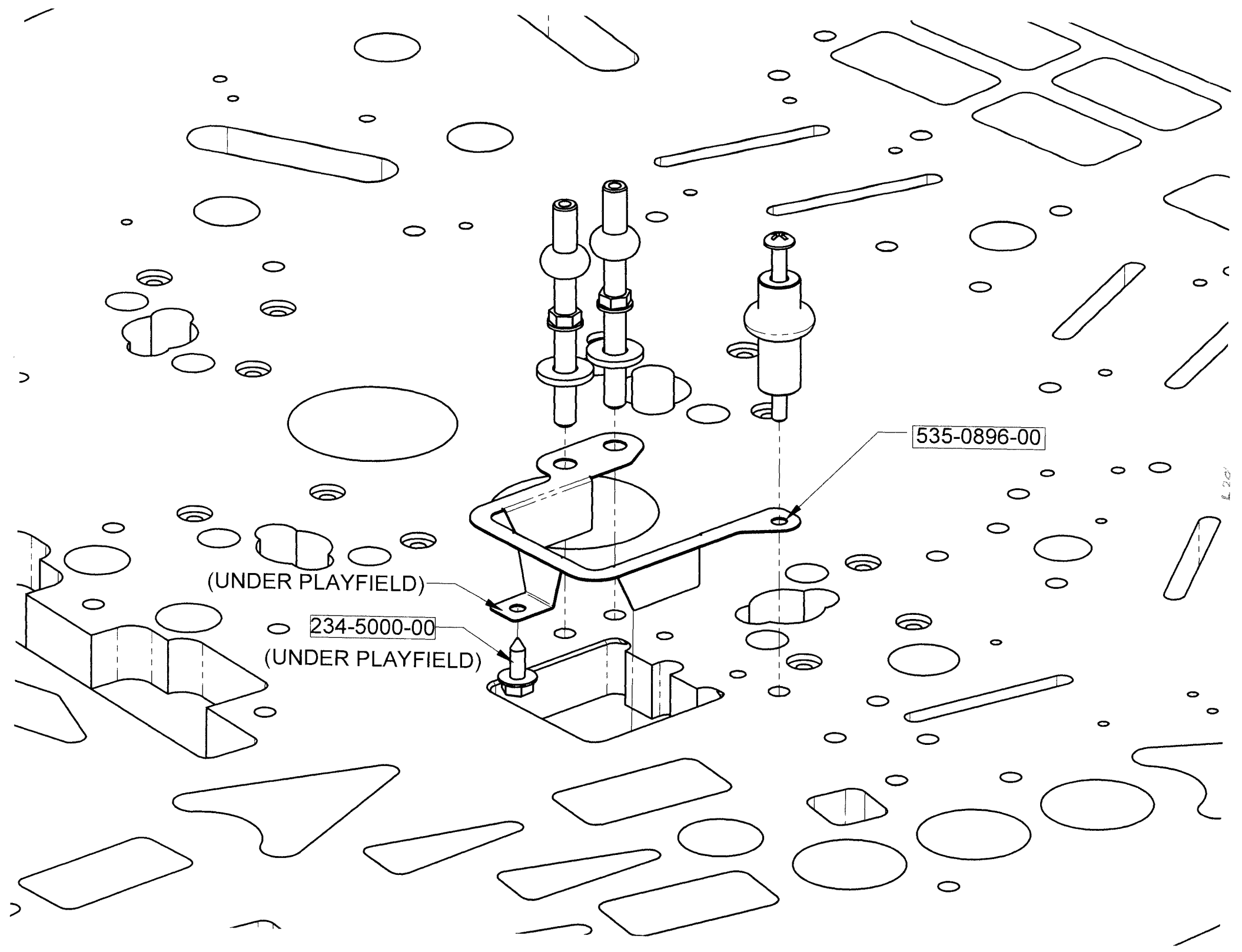
535-0896-00
(UNDER PLAYFIELD)
234-5000-00
(UNDER PLAYFIELD)

ITEM #	QTY	PART #	DESCRIPTION
1	1	525-5833-01	BACK PANEL - BISCUIT L E
2	1	820-7917-41	DECAL # 41 - BACK PANEL - LOWER
3	1	820-8337-40	DECAL # 40 - BACK PANEL- UPPER
4	2	511-5101-08	LED FLASHER ASSEMBLY W/ CABLE - WHITE
5	13	234-5001-02	SCREW, #6 X 1/2" HWH
6	7	077-5000-00	SOCKET - STAPLED - 2 LUGS
7	7	112-5034-02	DOUBLE LED, BAYONET BASE - RED
8	7	077-5008-00	SOCKET - SHORT
9	7	112-5034-08	DOUBLE LED, BAYONET BASE - CLEAR
10	7	112-5003-00	DIODE - 1N4004
11	2	040-5000-03	1/4" CABLE CLAMP
12	2	040-5000-06	1/2" CABLE CLAMP
13	4	240-5101-00	8-32 T-NUT
14	1	511-5096-01	ASSY, ELEC GATE RIGHT, RAIL MT
15	1	511-5096-00	ASSY, ELEC GATE LEFT, RAIL MT
16	4	237-5975-01	SCREW, 8-32 x 1/2 HWH SLOT SERR SW ZINC
17	1	535-0997-00	90° BRACKET
18	1	237-5809-00	SCREW, #6 X 1/2" PTH A

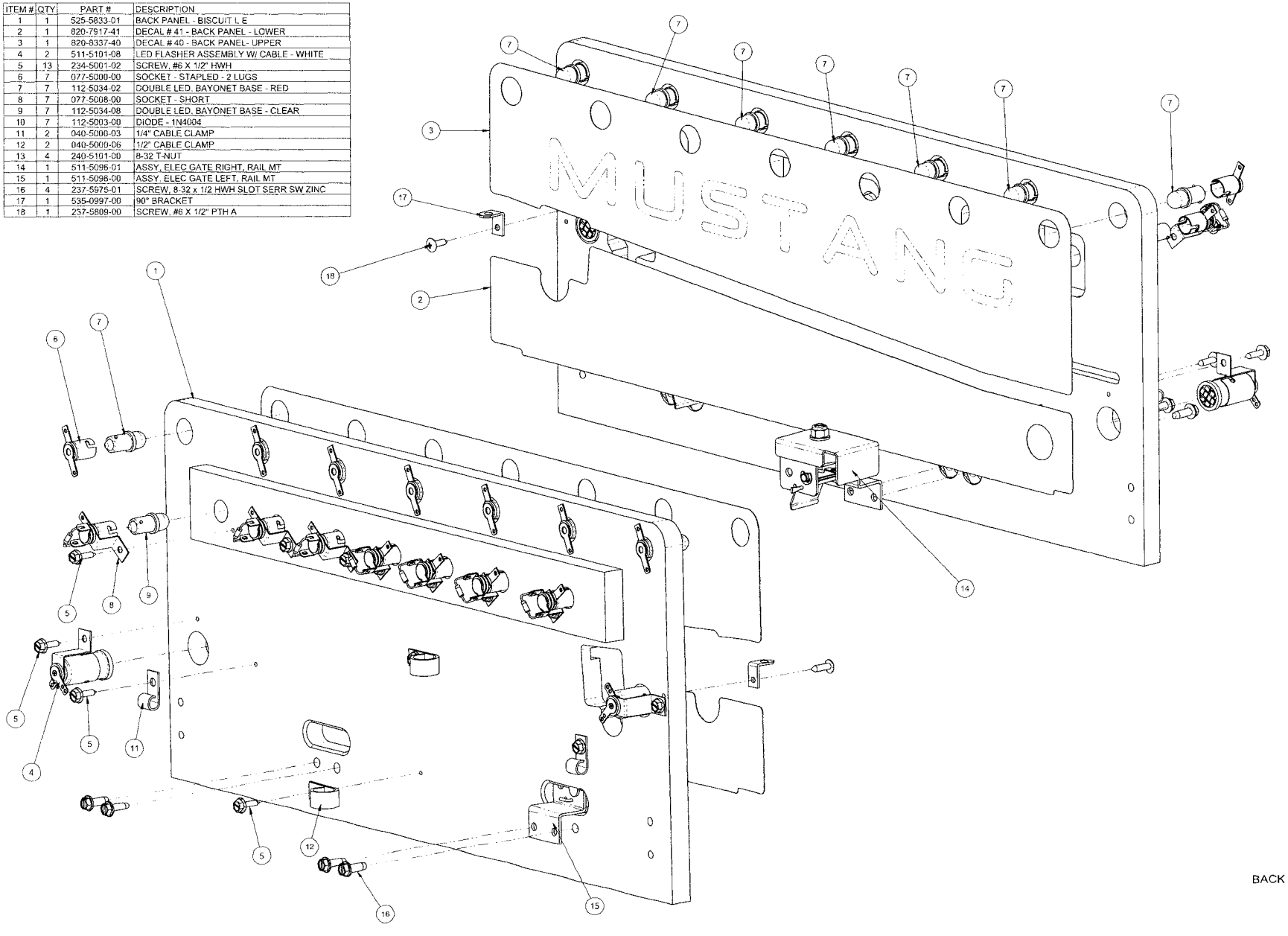

BACK PANEL ASSEMBLY - BISCUIT L E

500-9834-01

This page is intentionally blank

Backbox Wiring

- Coils Detailed Chart Table
- Backbox I/O Power Driver Board Detailed Wiring Diagram
- Backbox Board Layout Wiring Diagram
  - 128 X 32 Dot Matrix Display PCB (USA) 520-5052-15
  - 128 X 32 Dot Matrix CES-LED // EURO ONLY RoHS // 520-5052-15

Playfield Wiring

- General Illumination Circuit Detailed Wiring Diagram
- Playfield Switch Wiring Diagram
- Playfield Lamp Wiring Diagram
- Playfield Terminal Strips, Fuses & Misc. Wiring Descriptions & Locations
- #-Flipper Circuit Wiring Diagram

Cabinet and Coin Door Wiring

- Transformer Power Wiring Diagram
- Cabinet Wiring Diagram
- Coin Door Wiring Diagram
- Cabinet Universal Voltage Jumper Plugs (for use with Universal AC Cable, 036-5530-00 ONLY)

COILS DETAILED CHART TABLE

	High Current Coils Group 1	Drive Transistor	Driver Output PCB	Power Line Color	Power Line Connection	Power Voltage	Drive Transistor Control Line Color	D.T. Control Line Connect	Coil GA-Turn or Bulb Type
#1	TROUGH UP-KICKER	Q1	▲ I/O Power Driver ▼	YEL-VIO	J10-P9/10	50VDC	BRN-BLK	J8-P1	26-1200 090-5044-ND
#2	AUTO LAUNCH	Q2		YEL-VIO	J10-P9/10	50VDC	BRN-RED	J8-P3	23-800 090-5001-ND
#3	MID RAMP	Q3		YEL-VIO	J10-P9/10	50VDC	BRN-ORG	J8-P4	Dual-winding 090-5083-00 ND
#4	MID RAMP HOLD POWER	Q4		YEL-VIO	J10-P9/10	50VDC	BRN-YEL	J8-P5	Dual-winding 090-5083-00 ND
#5	UPPER RAMP	Q5		YEL-VIO	J10-P9/10	50VDC	BRN-GRN	J8-P6	Dual-winding 090-5083-03 ND
#6	UPPER RAMP HOLD POWER	Q6		YEL-VIO	J10-P9/10	50VDC	BRN-BLU	J8-P7	Dual-winding 090-5083-00 ND
#7	CENTER 5- BANK DROP RESET	Q7		YEL-VIO	J10-P9/10	50VDC	BRN-VIO	J8-P8	25-1240 090-5034-ND
#8	SHAKER MOTOR (OPTIONAL)	Q8		RED-WHT	J17-P7	16VAC	BRN-GRY	J8-P9	502-5027-00
	High Current Coils Group 2	**Drive Transistor**	**Driver Output PCB**	**Power Line Color**	**Power Line Connection**	**Power Voltage**	**Drive Transistor Control Line Color**	**D.T. Control Line Connect**	**Coil GA-Turn or Bulb Type**
#9	LEFT POP BUMPER	Q9	▲ I/O Power Driver ▼	YEL-VIO	J10-P9/10	50VDC	BLU-BRN	J8-P1	26-1200 090-5044-ND
#10	RIGHT POP BUMPER	Q10		YEL-VIO	J10-P9/10	50VDC	BLU-RED	J8-P2	26-1200 090-5044-ND
#11	BOTTOM POP BUMPER	Q11		YEL-VIO	J10-P9/10	50VDC	BLU-ORG	J8-P4	26-1200 090-5044-ND
#12	TOP POP BUMPER	Q12		YEL-VIO	J10-P9/10	50VDC	BLU-YEL	J8-P5	26-1200 090-5044-ND
#13	LEFT SLINGSHOT	Q13		YEL-VIO	J10-P9/10	50VDC	BLU-GRN	J8-P6	26-1200 090-5044-ND
#14	RIGHT SLINGSHOT	Q14		YEL-VIO	J10-P9/10	50VDC	BLU-BLU	J8-P7	26-1200 090-5044-ND
#15	**LEFT FLIPPER (50V RED/YEL)**	Q15		GRY-YEL~3A Fuse~RED-YEL	J10-P6/7	50VDC	ORG-GRY	J8-P8	23-900 090-5020-30 ND
#16	**RIGHT FLIPPER (50V RED/YEL)**	Q16		BLU YEL~3A Fuse~RED-YEL	J10-P6/7	50VDC	ORG-VIO	J8-P9	22-1080 090-5032-ND
	Low Current Coils Group 1	**Drive Transistor**	**Driver Output PCB**	**Power Line Color**	**Power Line Connection**	**Power Voltage**	**Drive Transistor Control Line Color**	**D.T. Control Line Connect**	**Coil GA-Turn or Bulb Type**
#17	FLASH: LEFT ORBIT ARROW	Q17	▲ I/O Power Driver ▼	ORG	J6-P10	20VDC	VIO-BRN	J7-P2	LED 113-5034-08
#18	FLASH: RIGHT ORBIT ARROW	Q18		ORG	J6-P10	20VDC	VIO-RED	J7-P3	LED 113-5034-08
#19	FLASH: SLINGSHOT (LEFT)	Q19		ORG	J6-P10	20VDC	VIO-ORG	J7-P4	LED 113-5033-08
#20	FLASH: SLINGSHOT (RIGHT)	Q20		ORG	J6-P10	20VDC	VIO-YEL	J7-P6	LED 113-5033-08
#21	FLASH: BACK PANEL (LEFT)	Q21		ORG	J6-P10	20VDC	VIO-GRN	J7-P7	LED 113-5034-08
#22	TURN TABLE/CAR MOTOR	Q22		BRN	J7-P1	20VDC	VIO-BLU	J7-P8	MOTOR 041-5111-00
#23	FLASH: BACK PANEL (RIGHT)	Q23		ORG	J6-P10	20VDC	VIO-BLK	J7-P9	LED 113-5034-08
#24	OPTIONAL (e.g. COIN METER)	Q24		RED	J16-P4-8	5VDC	VIO-GRY	J7-P10	COIN METER

	Low Current Coils Group 2	Drive Transistor	Driver Output PCB	Power Line Color	Power Line Connection	Power Voltage	Drive Transistor Control Line Color	D.T. Control Line Connect	Coil GA-Turn or Bulb Type
#25	FLASH: POP BUMPERS (RIGHT)	Q25	▲ I/O Power Driver ▼	ORG	J6-P10	20VDC	BLK-BRN	J6-P1	LED 113-5034-08
#26	FLASH: POP BUMPERS (LEFT)	Q26		ORG	J6-P10	20VDC	BLK-RED	J6-P2	LED 113-5034-08
#27	FLASH: (RIGHT) SCOOP ARROW	Q27		ORG	J6-P10	20VDC	BLK-ORG	J6-P3	LED 113-5034-08
#28	FLASH: 180	Q28		ORG	J6-P10	20VDC	BLK-YEL	J6-P4	LED 113-5034-08
#29	FLASH: SKILLSHOT	Q29		ORG	J6-P10	20VDC	BLK-GRN	J6-P5	LED 113-5034-08
#30	FLASH: TURNTABLE	Q30		ORG	J6-P10	20VDC	BLK-BLU	J6-P6	LED 112-5041-08
#31	FLASH: SPEAKER PANEL (RIGHT)	Q31		ORG	J-P10	20VDC	BLK-VIO	J6-P7	LED 113-5034-05
#32	FLASH: SPEAKER PANEL (LEFT)	Q32		ORG	J6-P10	20VDC	BLK-GRY	J6-P8	LED 113-5034-05

Backbox I/O Power Driver Board (Coils Q1-Q32) Detailed Wiring Diagram

Partial View (520-5249-00)

ALL FUSES RATED 250V SLO-BLO
I/O FUSE CHART INFO IN BACKBOX & PAGE DR. 1

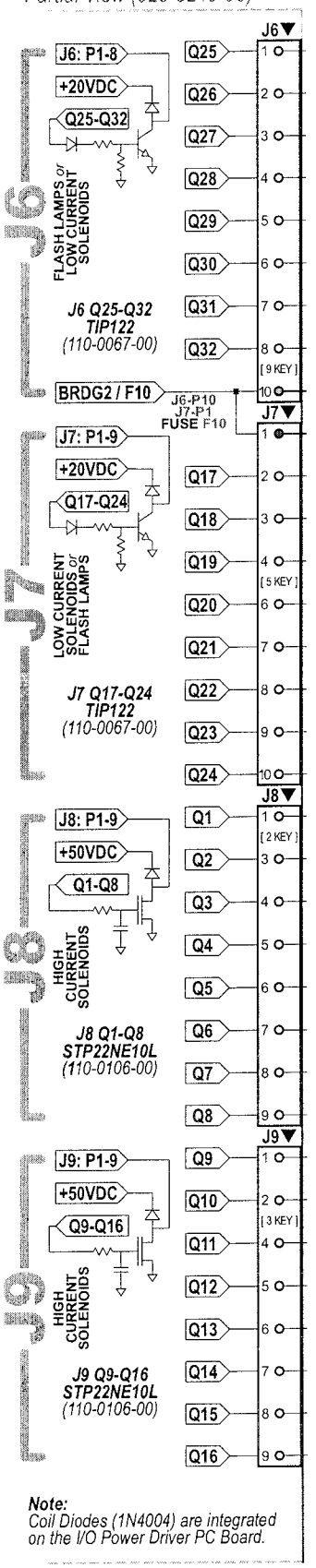

*For complete and detailed schematics of the Connectors, Coils, Flash Lamps, Bridges and Fuses noted below, see the I/O Power Driver PCB (Sheets **1** & **2** of **4**) in Section **5**, Chapter **4**, Printed Circuit Boards (PCBs).*

Note:
Coil Diodes (1N4004) are integrated on the I/O Power Driver PC Board.

#33 – #35 Note: *If this game is equiped with an optional Ticket Dispenser & Meter, see the end of Sec. **5**, Chapter **4** for wiring information. Ensure Std. Adj. **56**, **Ticket Dispenser = YES**.*

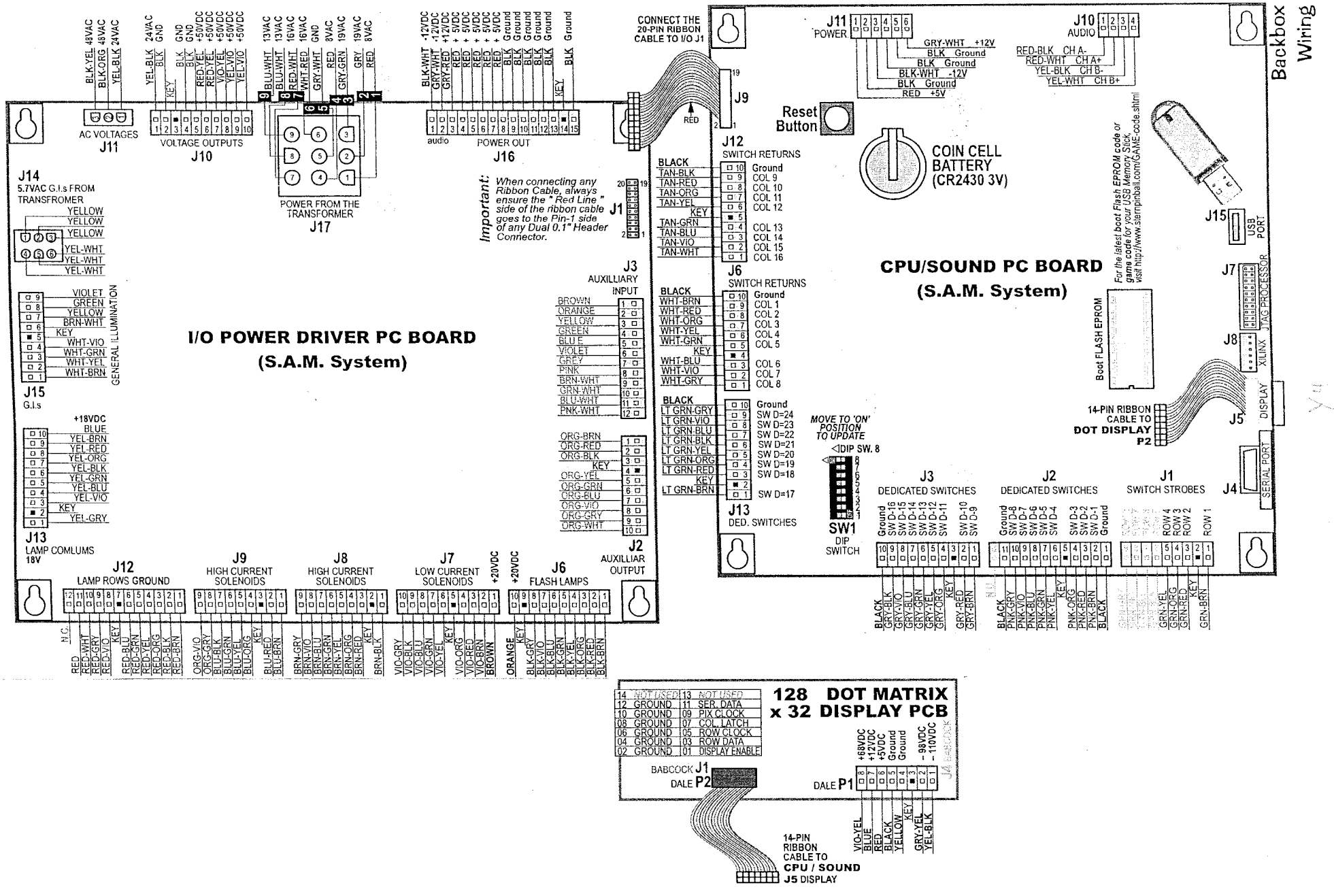
Backbox Wiring
I/O POWER DRIVER PC BOARD
(S.A.M. System)
CPU/SOUND PC BOARD
(S.A.M. System)
128 DOT MATRIX x 32 DISPLAY PCB
CONNECT THE 20-PIN RIBBON CABLE TO I/O J1
AC VOLTAGES J11
VOLTAGE OUTPUTS J10
POWER FROM THE TRANSFORMER J17
POWER OUT J16
audio
J14 5.7VAC G.I.s FROM TRANSFROMER
J15 G.I.s
GENERAL ILLUMINATION
J13 LAMP COMLUMS 18V
+18VDC
J12 LAMP ROWS GROUND
J9 HIGH CURRENT SOLENOIDS
J8 HIGH CURRENT SOLENOIDS
J7 LOW CURRENT SOLENOIDS
+20VDC
J6 FLASH LAMPS
J2 AUXILLIAR OUTPUT
J3 AUXILLIARY INPUT
Important: When connecting any Ribbon Cable, always ensure the " Red Line " side of the ribbon cable goes to the Pin-1 side of any Dual 0.1" Header Connector.
J1
J11 POWER
J10 AUDIO
Reset Button
COIN CELL BATTERY (CR2430 3V)
J12 SWITCH RETURNS
J6 SWITCH RETURNS
J13 DED. SWITCHES
MOVE TO 'ON' POSITION TO UPDATE
DIP SW. 8
SW1 DIP SWITCH
J3 DEDICATED SWITCHES
J2 DEDICATED SWITCHES
J1 SWITCH STROBES
J15 USB PORT
J7 XILINX JTAG PROCESSOR
J8
Boot FLASH EPROM
For the latest boot Flash EPROM code or game code for your USB Memory Stick, visit http://www.sternpinball.com/GAME-code.shtml
14-PIN RIBBON CABLE TO DOT DISPLAY P2
J5 DISPLAY
J4 SERIAL PORT
BABCOCK J1
DALE P2
DALE P1
14-PIN RIBBON CABLE TO CPU / SOUND J5 DISPLAY

MUSTANG L.E GAMES

Wiring for the 12-Transistor driver board, 520-5326-02

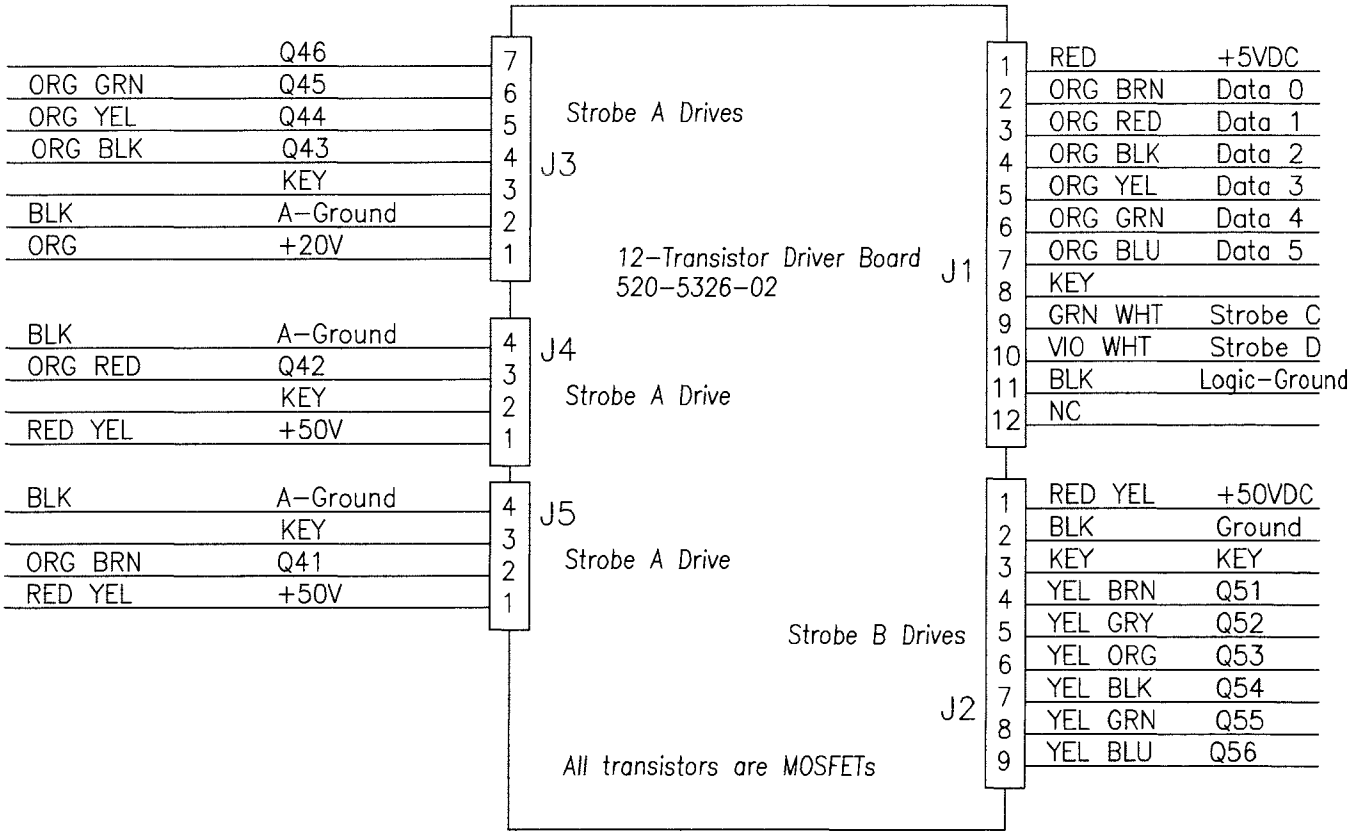

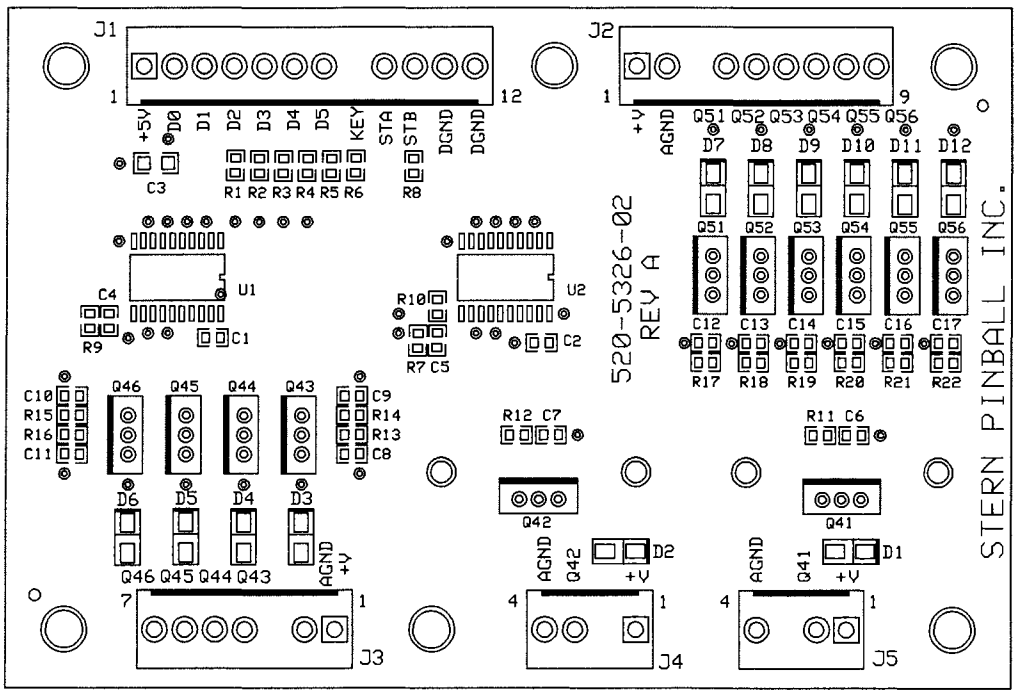

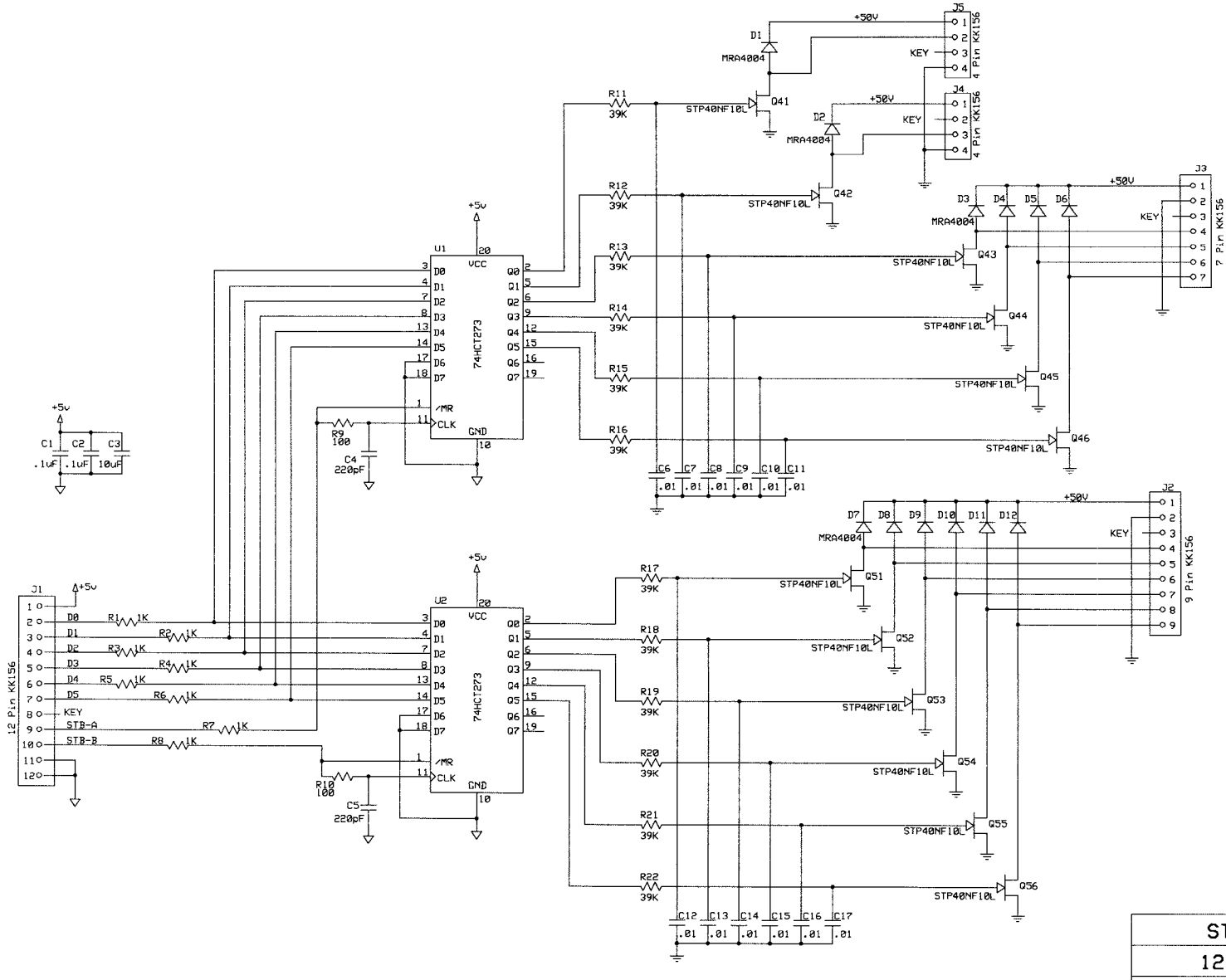

STERN PINBALL INC.		
12 Auxiliary Driver		
520-5326-00	Rev A 12/20/2012	Page 1 of 1

MUSTANG
Limited Edition
RGB LED WIRING
MARCH 18, 2014

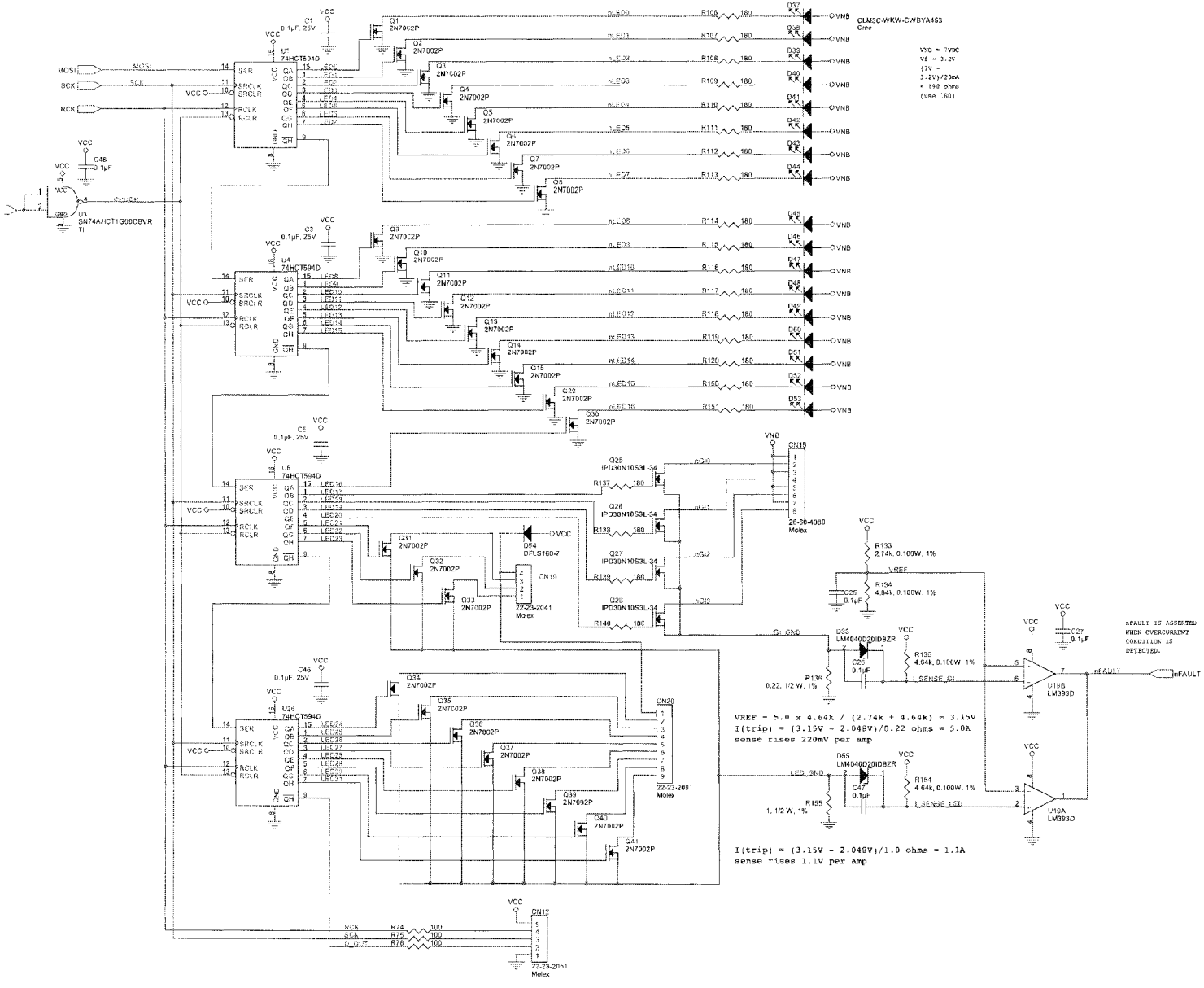

Title	Biscuit Top-- I/o
Size C	Document Number 520-6822-09
Date: Tuesday, March 11, 2014	Sheet 1 of 4

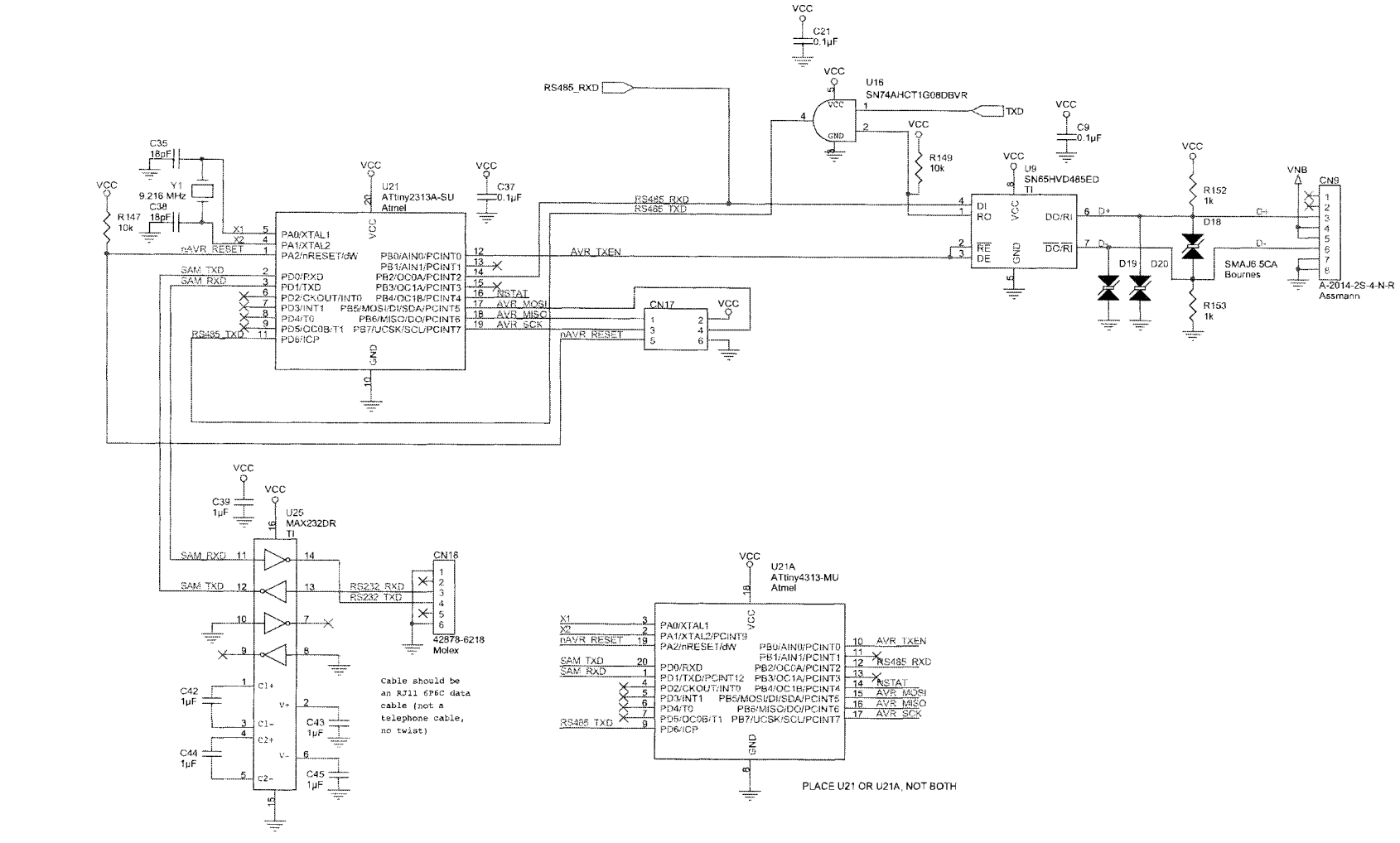

Title	Biscuit Top– communication
Size: B	Document Number: 520-6822-00
Date: Tuesday, March 11, 2014	Sheet 2 of 4

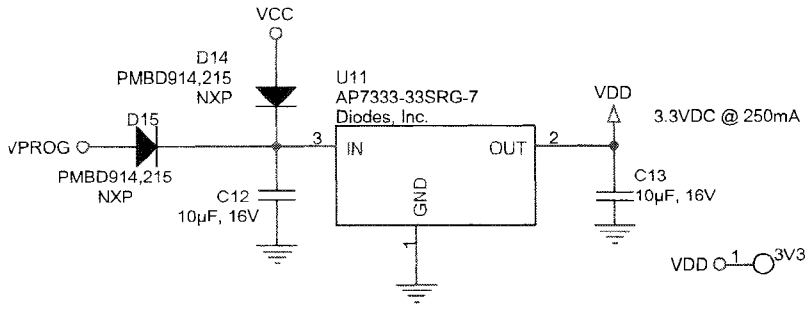

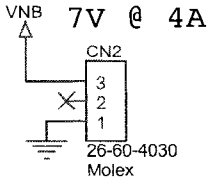

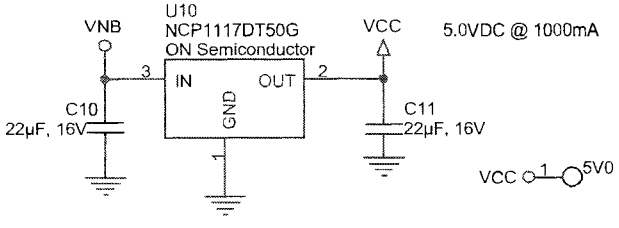

Title	Biscuit Top-- power supply	
Size A	Document Number 520-6822-00	Rev A
Date: Tuesday, March 11, 2014	Sheet 3 of 4	

A | B | C | D | E

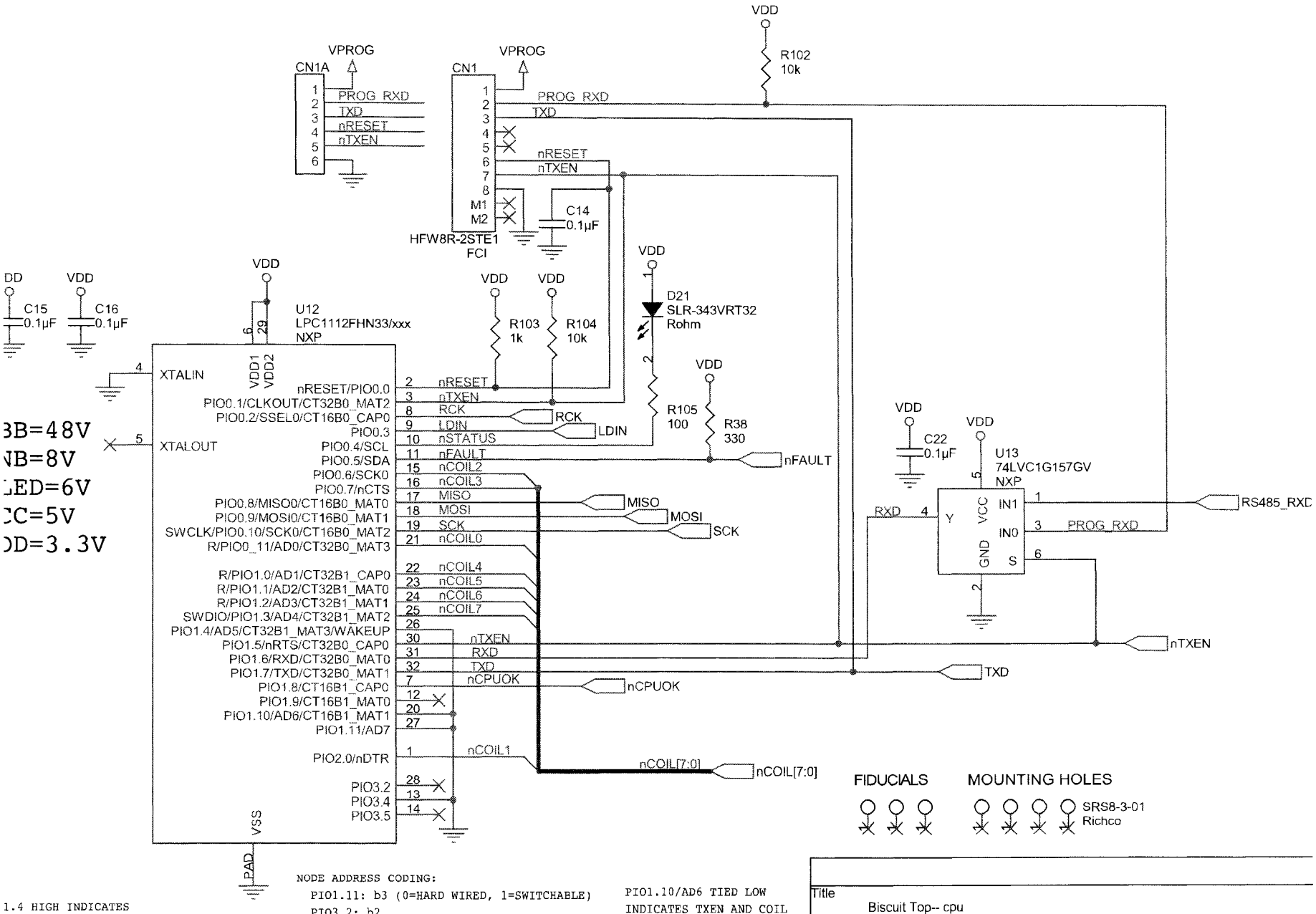

1.4 HIGH INDICATES
ABSENT. SINCE THIS
RD DOESN"T EXPECT VBB
S PIN IS TIED LOW.

NODE ADDRESS CODING:
PIO1.11: b3 (0=HARD WIRED, 1=SWITCHABLE)
PIO3.2: b2
PIO3.4: b1
PIO3.5: b0
HARD WIRED TO ADDRESS 5

PIO1.10/AD6 TIED LOW INDICATES TXEN AND COIL OUTPUTS SHOULD BE ACTIVE LOW (WERE ACTIVE HIGH ON EARLIER VERSIONS)

Title	Biscuit Top-- cpu	
Size A	Document Number 520-6822-00	Rev A
Date: Tuesday, March 11, 2014	Sheet 4 of 4	

A | B | C | D | E

MUSTANG LE
RGB LE Board 520-6831-00

LEFT 5A

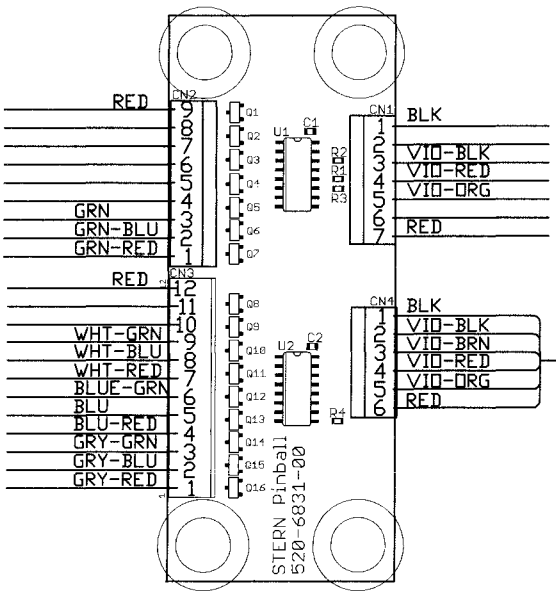

RIGHT 5B

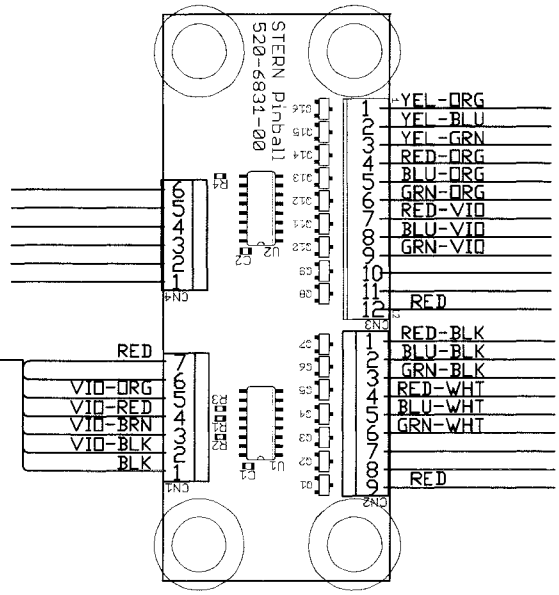

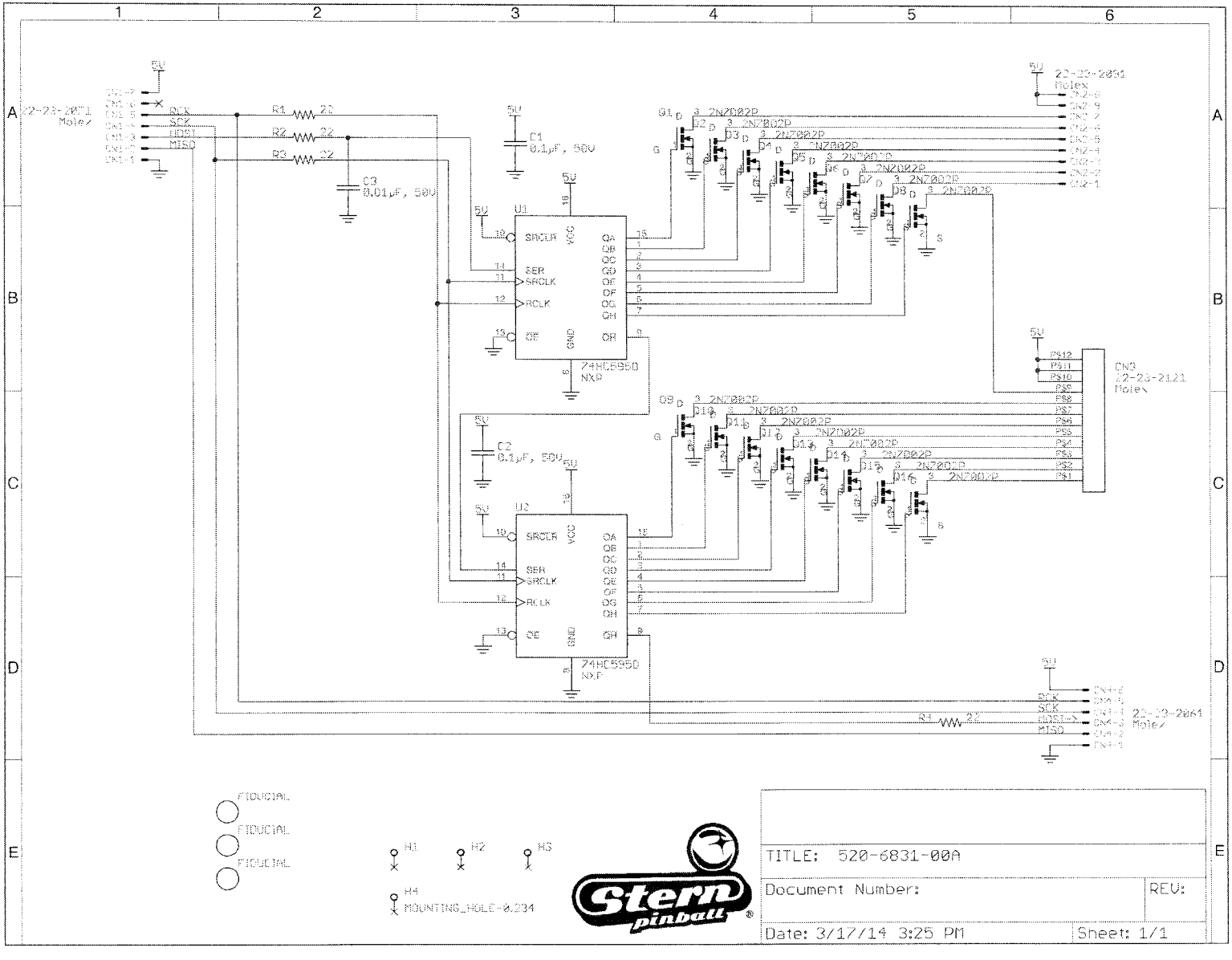

22-23-2071
Molex
RCK
SCK
MOSI
MISO
R1 22
R2 22
R3 22
C3
0.01µF, 50V
C1
0.1µF, 50V
C2
0.1µF, 50V
U1
U2
SRCLR
SER
SRCLK
RCLK
OE
VCC
GND
QA
QB
QC
QD
QE
QF
QG
QH
74HC595D
NXP
Q1
Q2
Q3
Q4
Q5
Q6
Q7
Q8
Q9
Q10
Q11
Q12
Q13
Q14
Q15
Q16
2NZ002P
22-23-2091
Molex
CN3
22-23-2121
Molex
22-23-2061
Molex
R4 22
FIDUCIAL
FIDUCIAL
FIDUCIAL
H1
H2
H3
H4
MOUNTING_HOLE-0.234
Stern pinball
TITLE: 520-6831-00A
Document Number:
REV:
Date: 3/17/14 3:25 PM
Sheet: 1/1

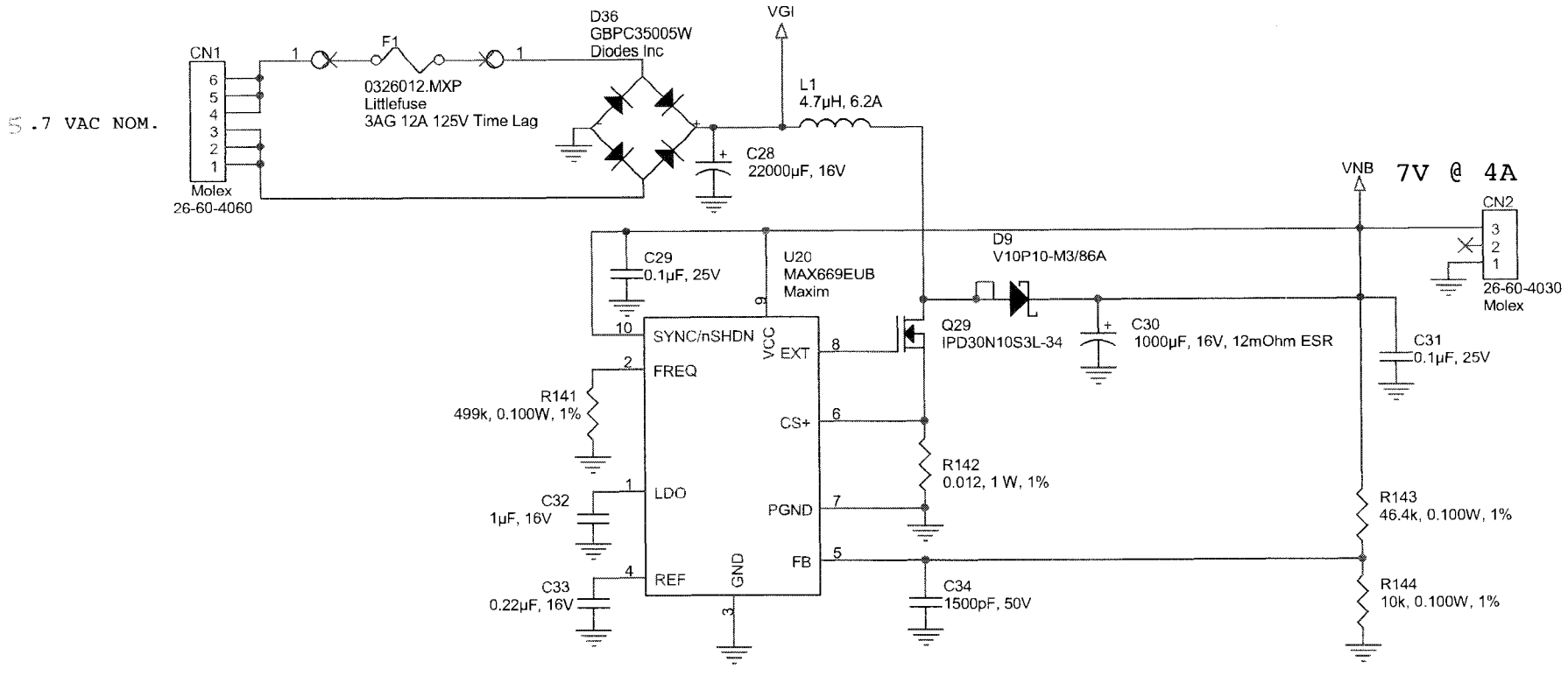

FIDUCIALS

MOUNTING HOLES

SRS6-6-01
Richco

Title	Biscuit Nodebus Power Supply	
Size A	Document Number 520-6821-00	Rev 0
Date: Wednesday, March 05, 2014	Sheet 1 of 1	

A B C D E

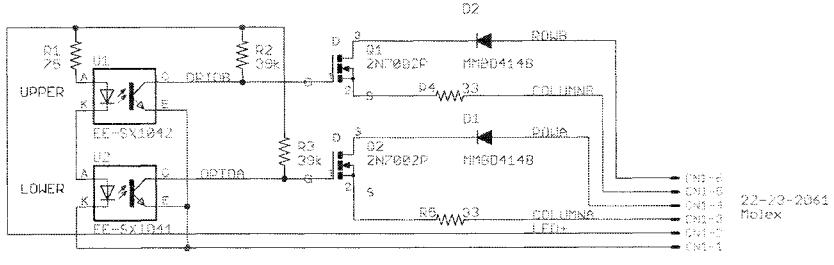

FIDUCIAL

FIDUCIAL

FIDUCIAL

H1

H2

STERN Pinball	2020 Janice Avenue Melrose Park, IL 60160 708-345-7700	
TITLE: 520-6931-00A		
Document Number:		REV:
Date: 3/12/14 5:47 AM	Sheet: 1/1	

G/I MAP

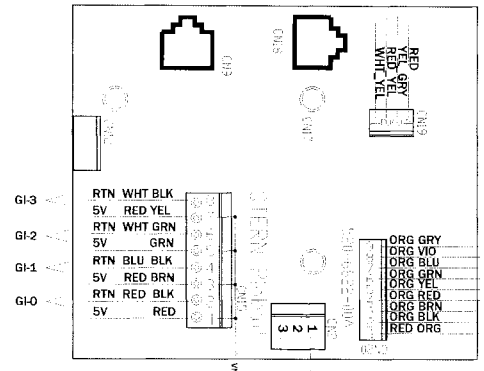

BOARD 5

7 BAYONET 112-5034-02 LED(RED)

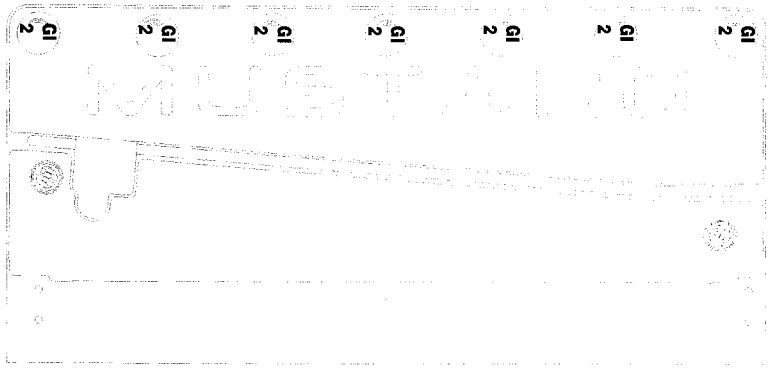

15 WEDGE BASE 112-5033-08
8 BAYONET 112-5034-08

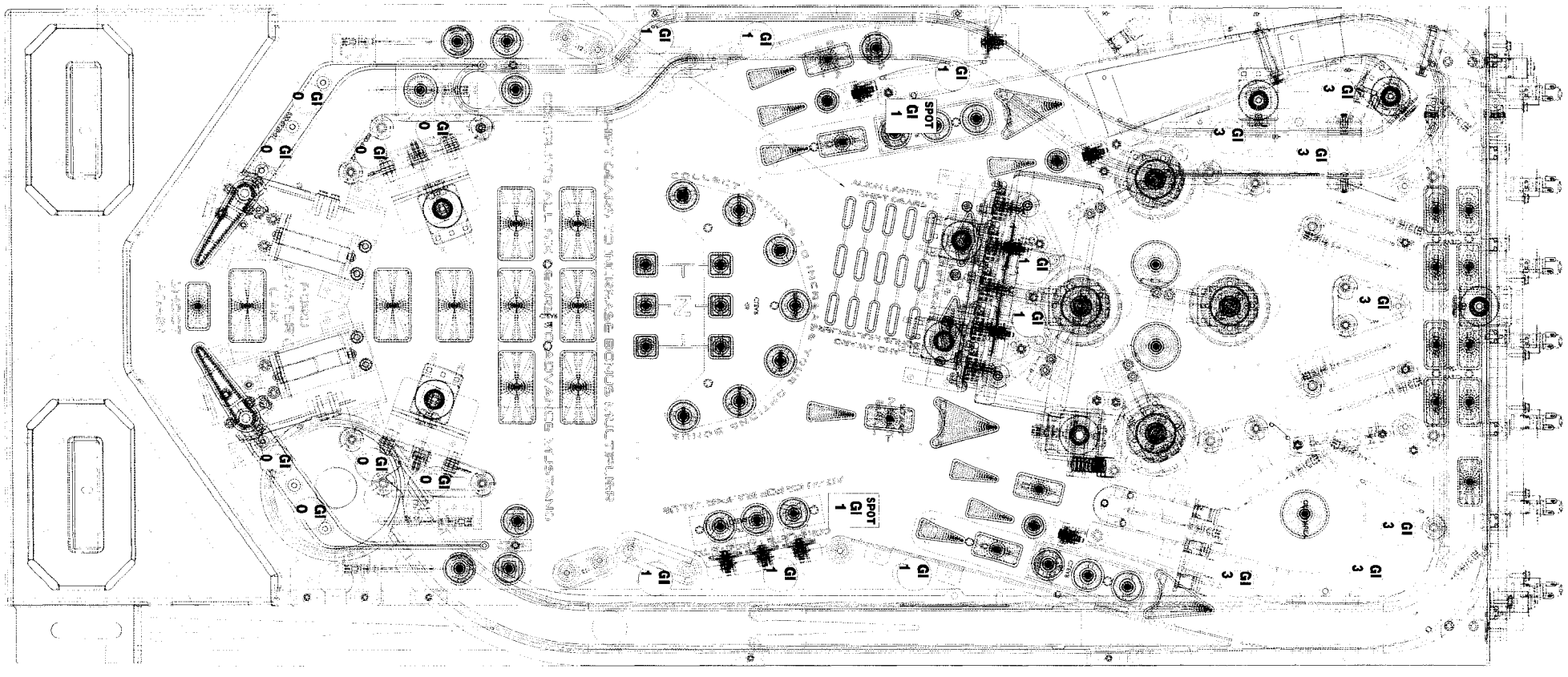

MUSTANG PRO/LE
Opto Amplifier Board
Wiring Configuration

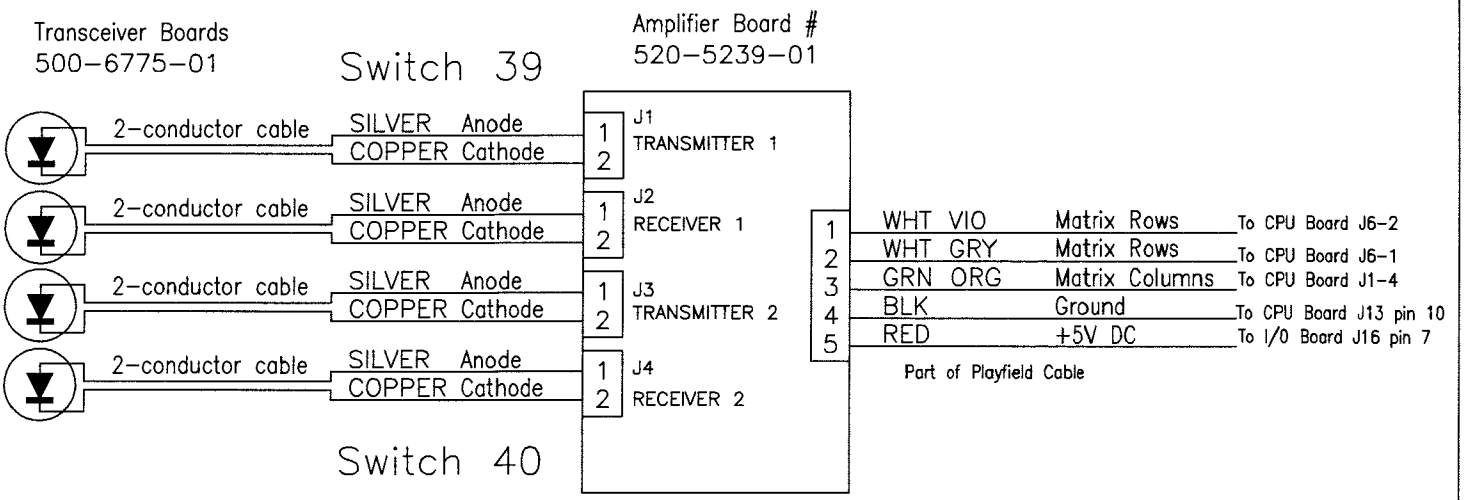

Date: 12-11-13		TITLE	
Scale: N/S	Rev: -	Opto Amplifier Board Wiring	
STERN PINBALL, INC.	DWN. REYNA	PART NO.	
	1st USE MUSTANG		

Y17

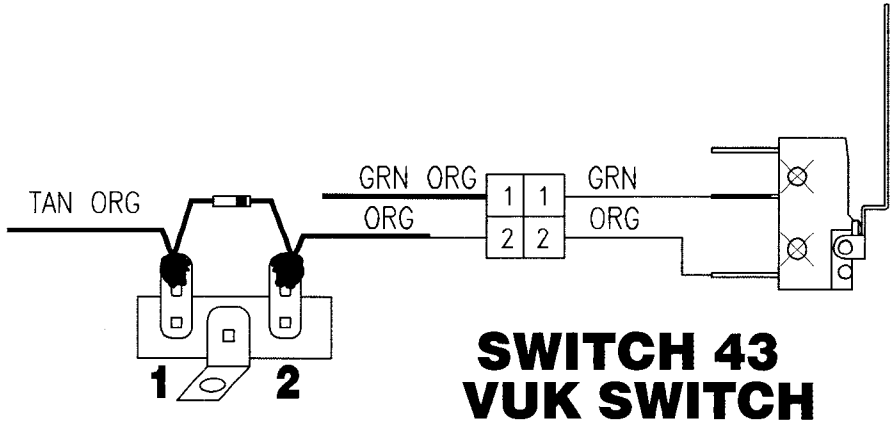

SWITCH 43
VUK SWITCH

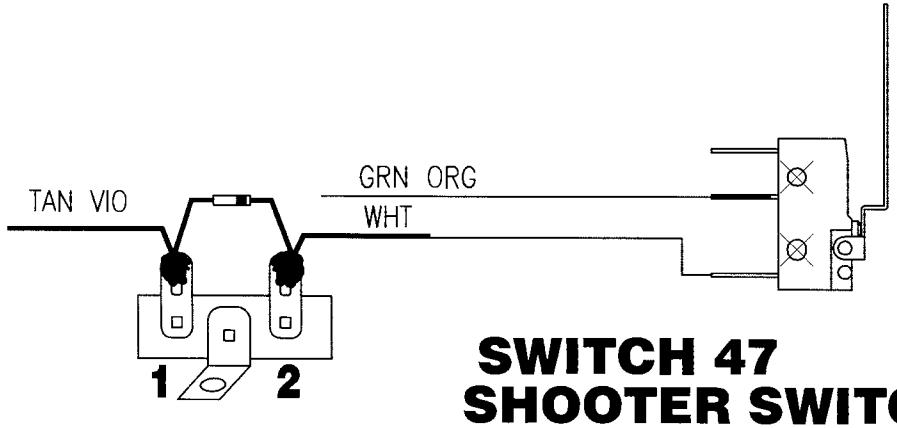

SWITCH 47
SHOOTER SWITCH

DWN. REYNA	DATE 01-10-14		TITLE DTS Confirguration MUSTANG (LE)
1st USE	SCALE 1:1	REV -	
Stern Pinball, Inc 2020 JANICE AVE., MELROSE PARK, IL. 60160			PART NO. DTS-MAP

DTS LAMP

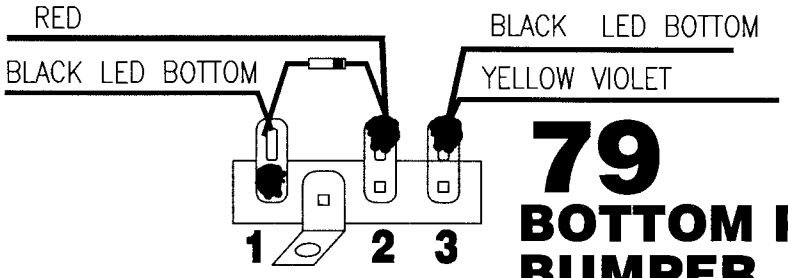

79
BOTTOM POP BUMPER

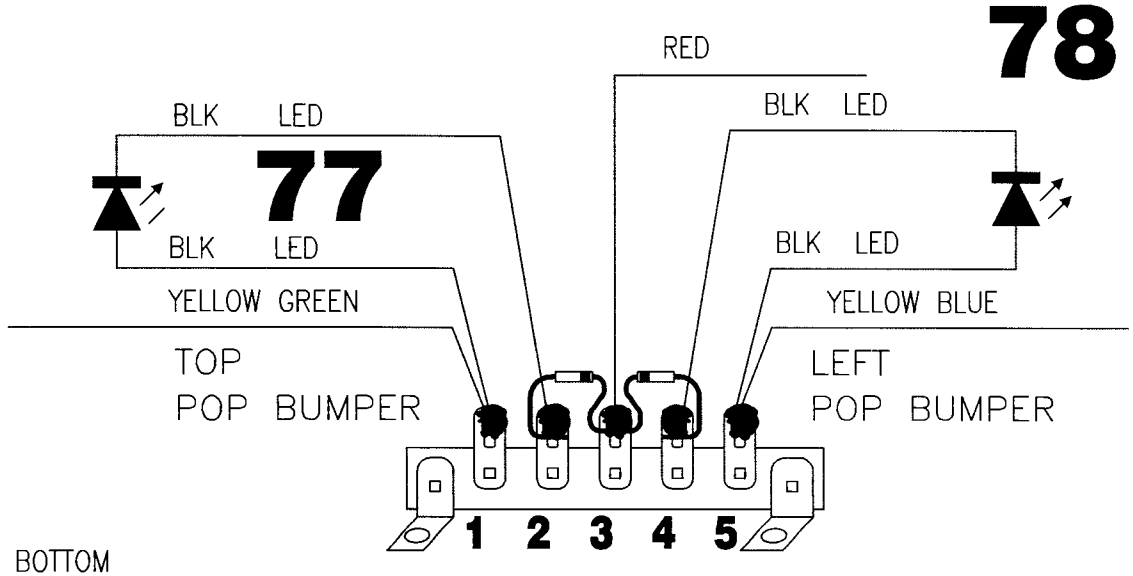

77

78

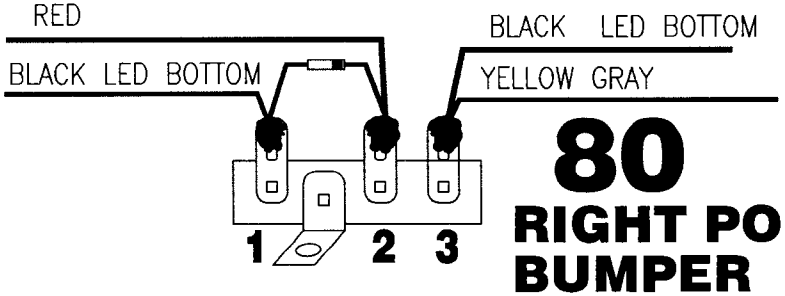

80
RIGHT POP BUMPER

DWN. REYNA	DATE 12-11-13	TITLE	DTS Confirguration MUSTANG(LE)
1st USE	SCALE 1:1 / REV -		
Stern Pinball, Inc 2020 JANICE AVE., MELROSE PARK, IL. 60160		PART NO.	DTS-MAP

MUSTANG
TYPICAL DUAL WINDING COIL 090-5083-00-ND WIRING

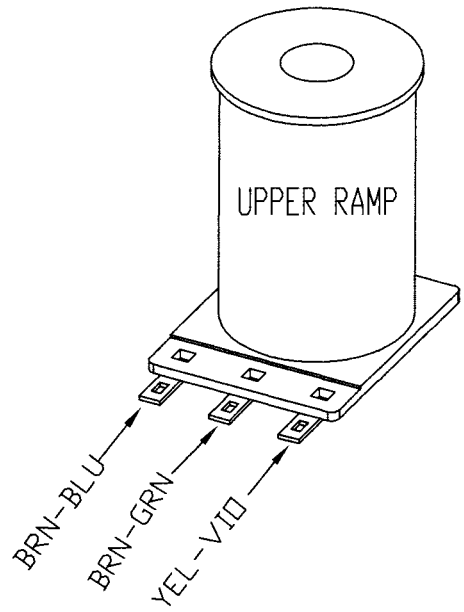

UPPER RAMP

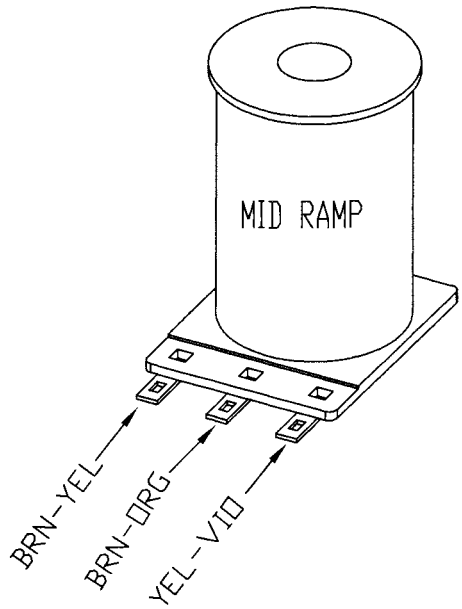

MID RAMP

Playfield Switch Wiring Diagram

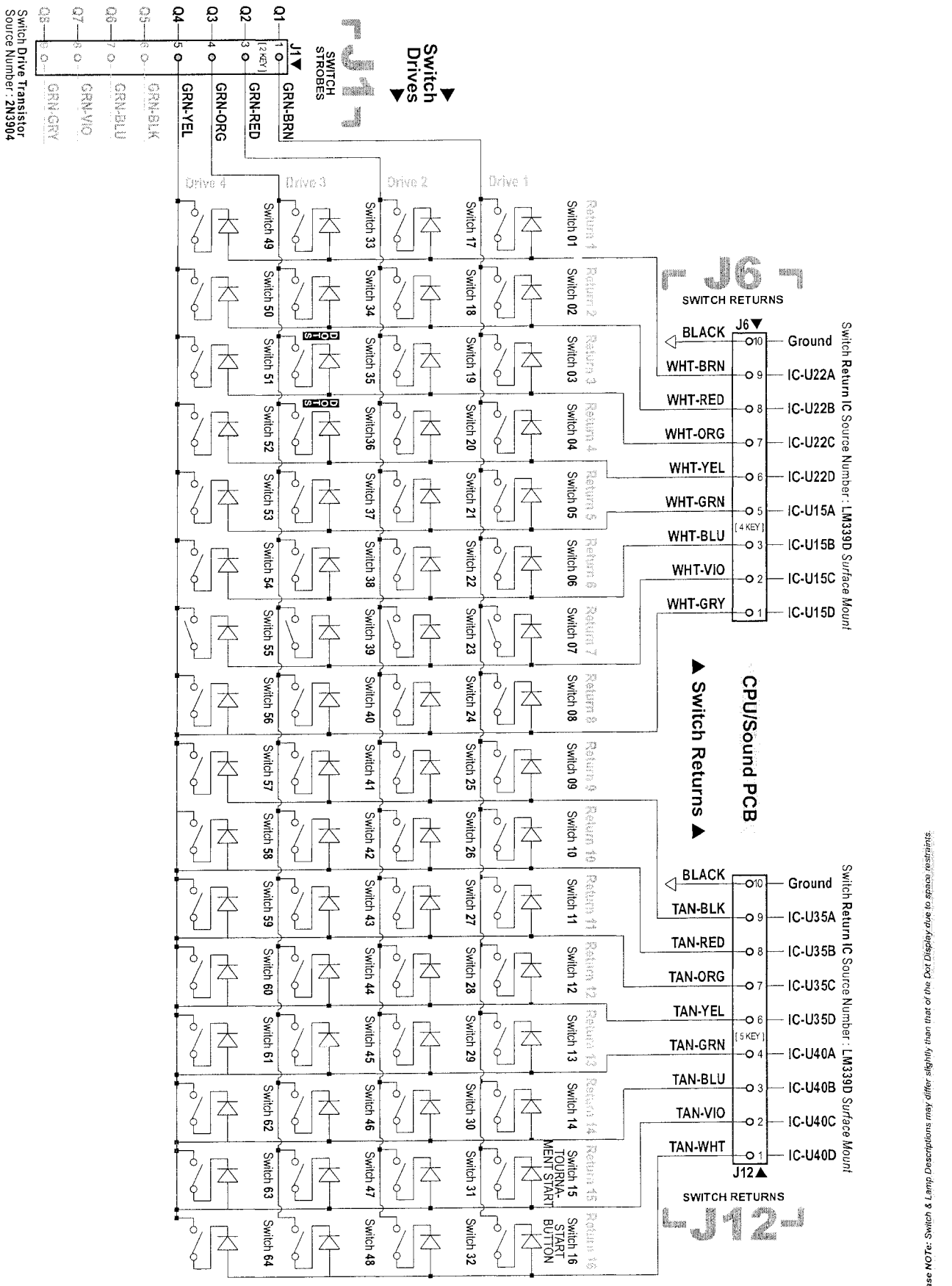

Please NOTe: Switch & Lamp Descriptions may differ slightly than that of the Dot Display due to space restraints.

Playfield Wiring

#-Flipper Circuit Wiring Diagram

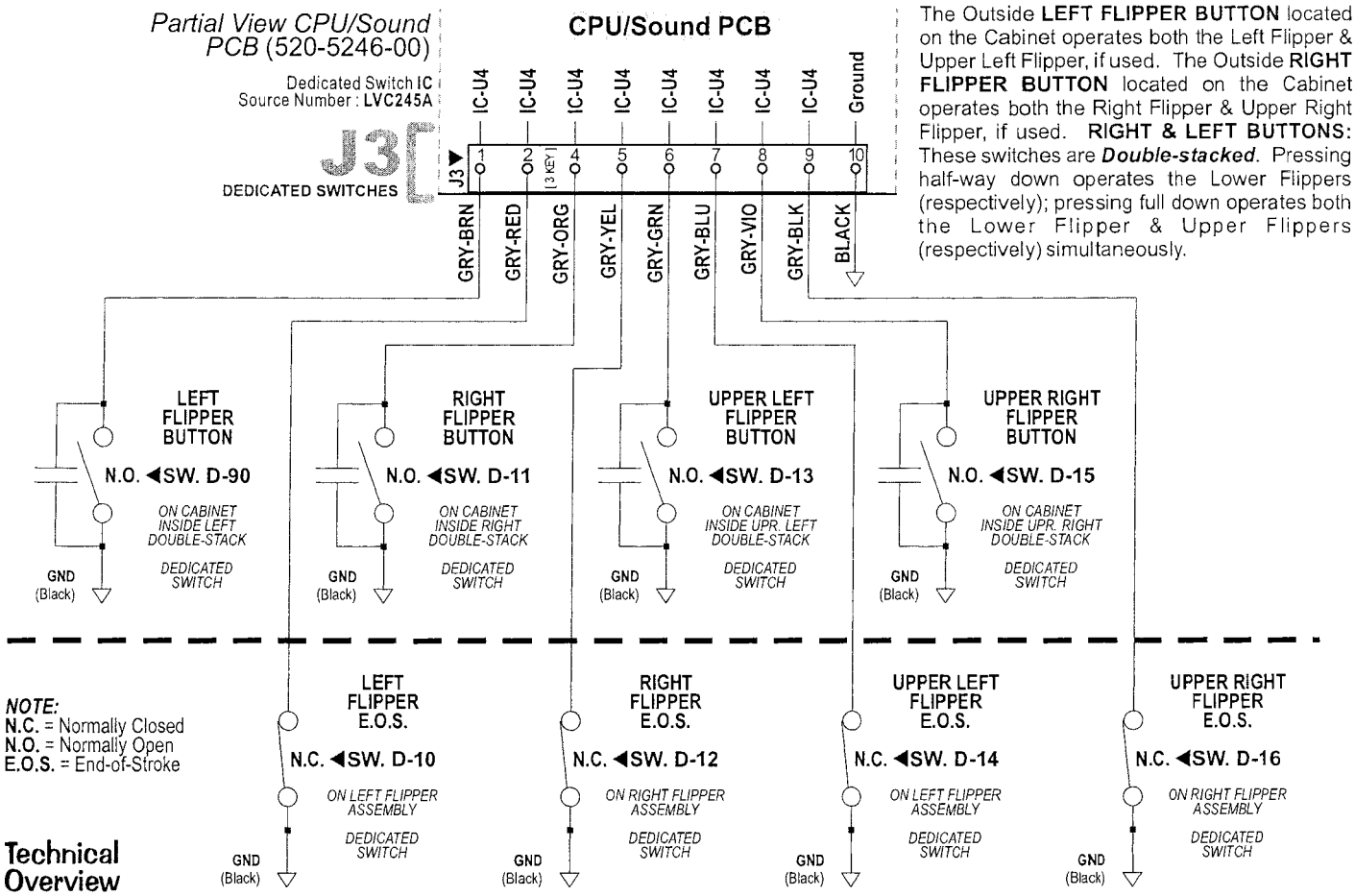

The Outside **LEFT FLIPPER BUTTON** located on the Cabinet operates both the Left Flipper & Upper Left Flipper, if used. The Outside **RIGHT FLIPPER BUTTON** located on the Cabinet operates both the Right Flipper & Upper Right Flipper, if used. **RIGHT & LEFT BUTTONS:** These switches are ***Double-stacked***. Pressing half-way down operates the Lower Flippers (respectively); pressing full down operates both the Lower Flipper & Upper Flippers (respectively) simultaneously.

NOTE:
N.C. = Normally Closed
N.O. = Normally Open
E.O.S. = End-of-Stroke

Technical Overview

Our ***Flipper System*** uses one supply voltage (+50VDC) for both ***kick*** & ***hold***. Once the **Game CPU** detects a Flipper Cabinet Switch closure *(during game play)* it applies a 40*msec* pulse to the gate of the Flipper Drive Transistor (STP22NE10L). If it continues to detect a Flipper Cabinet Switch closure *(the player holding the button in)* it will continue to pulse the flipper drive transistor 1*msec* every 12*msecs* for the duration of the hold cycle.

The **E.O.S.** (End-Of-Stroke) **Switch** serves the same function as before as it prevents foldback when the player has the flipper energized to capture balls. The **E.O.S. Dedicated Switch** is a normally closed switch which opens approximately 1/16" when the flipper is energized. The **Game CPU** will detect a switch closure if the flipper bat is forced back by a high velocity shot or rebound on the playfield and will apply another 40*msec* pulse of 50VDC to the coil.

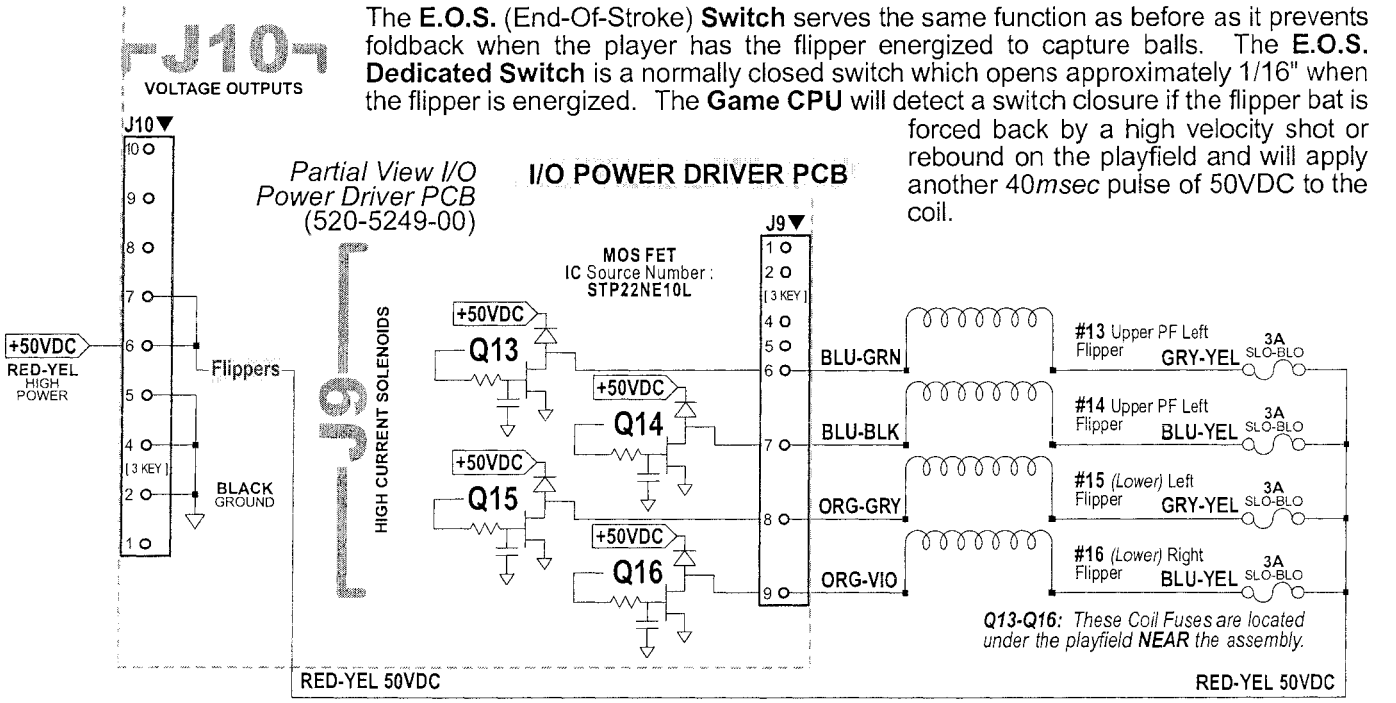

Q13-Q16: *These Coil Fuses are located under the playfield **NEAR** the assembly.*

Typical Under-Playfield Fuses are rated:
3A 250v Slo-Blo
Do Not Over-Fuse

NOTe:
Coil Diodes (1N4004) are integrated on the I/O Power Driver PCB. See Coils Detailed Wiring Diagram for actual number of flippers used on this game.

Playfield Wiring

Transformer Power Wiring Diagram

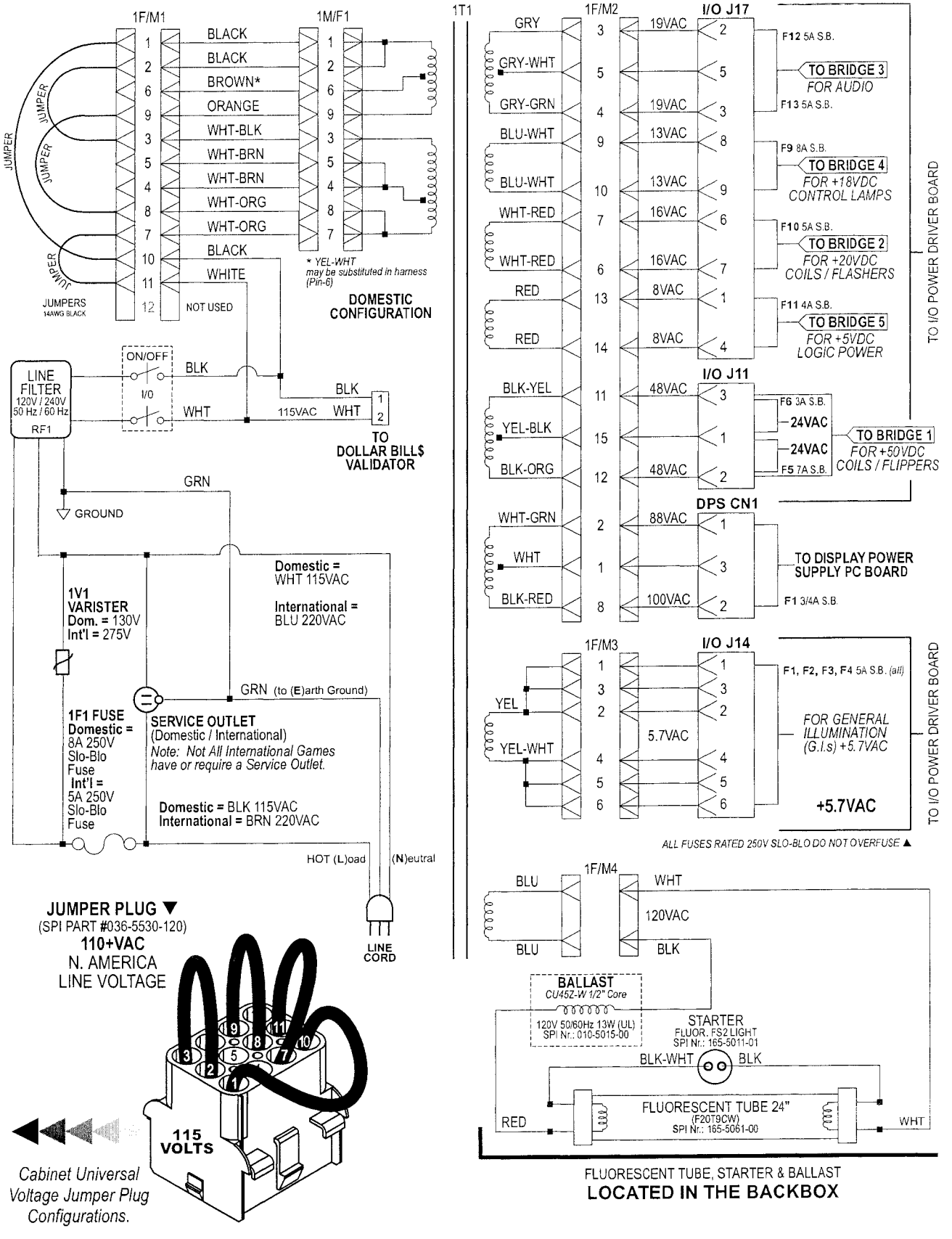

Cabinet Universal Voltage Jumper Plug Configurations.

Cabinet and Coin Door Wiring

Cabinet Wiring Diagram

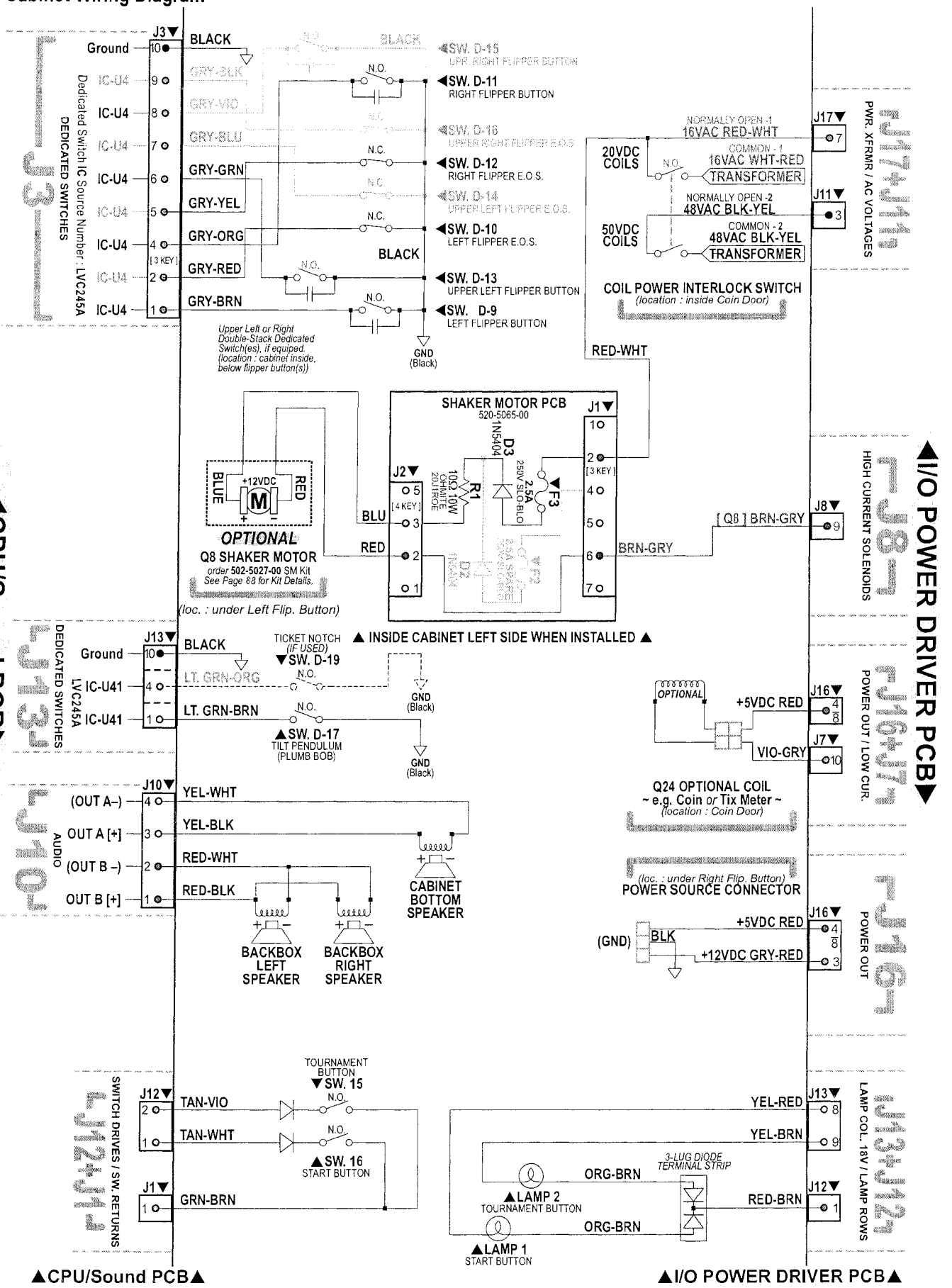

Cabinet and Coin Door Wiring

Coin Door Wiring Diagram

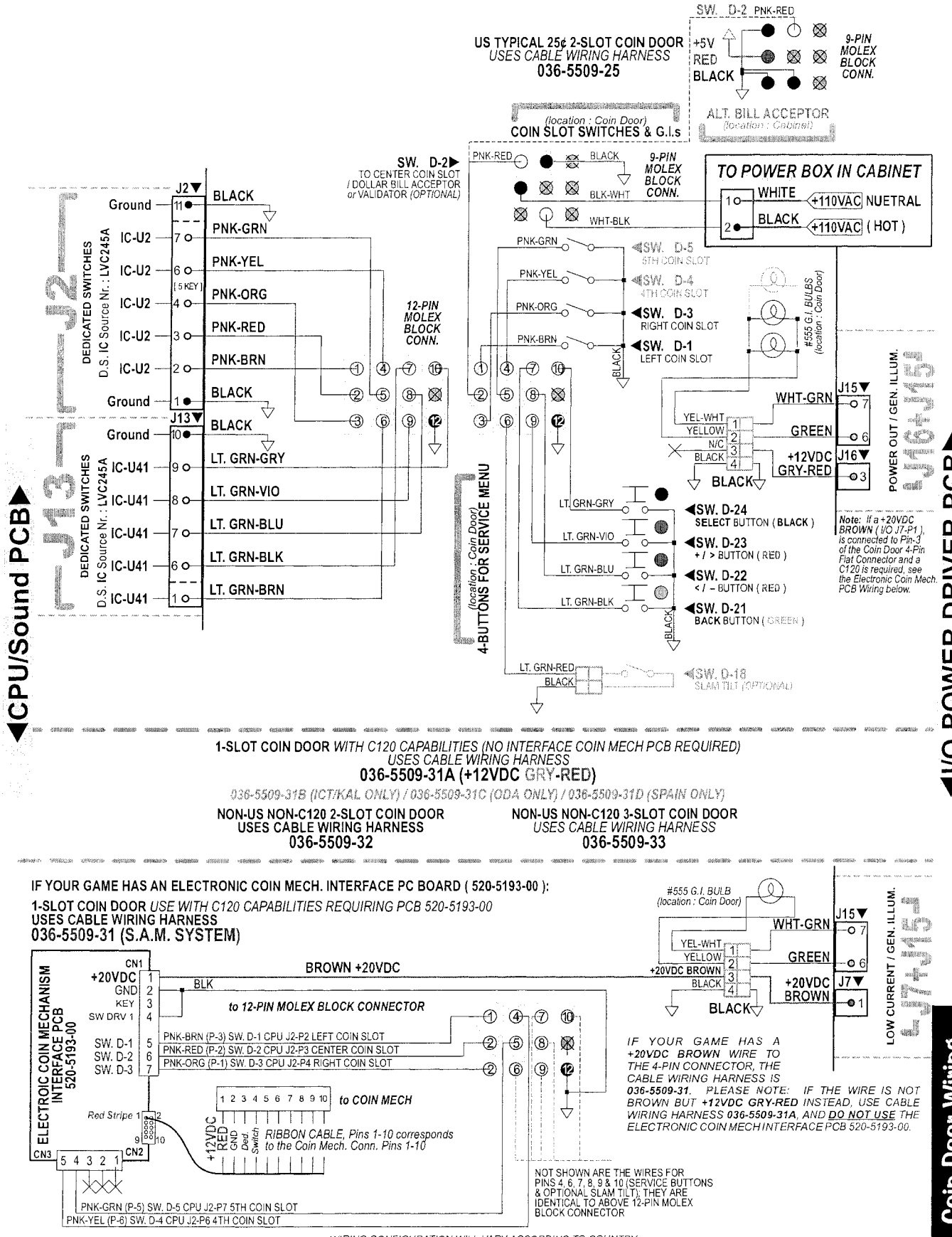

1-SLOT COIN DOOR *WITH C120 CAPABILITIES (NO INTERFACE COIN MECH PCB REQUIRED)*
USES CABLE WIRING HARNESS
036-5509-31A (+12VDC GRY-RED)

036-5509-31B (ICT/KAL ONLY) / 036-5509-31C (ODA ONLY) / 036-5509-31D (SPAIN ONLY)

NON-US NON-C120 2-SLOT COIN DOOR
USES CABLE WIRING HARNESS
036-5509-32

NON-US NON-C120 3-SLOT COIN DOOR
USES CABLE WIRING HARNESS
036-5509-33

IF YOUR GAME HAS AN ELECTRONIC COIN MECH. INTERFACE PC BOARD (520-5193-00):

1-SLOT COIN DOOR *USE WITH C120 CAPABILITIES REQUIRING PCB 520-5193-00*
USES CABLE WIRING HARNESS
036-5509-31 (S.A.M. SYSTEM)

~ WIRING CONFIGURATION WILL VARY ACCORDING TO COUNTRY ~

Cabinet and Coin Door Wiring

Cabinet Universal Voltage Jumper Plugs *(for use with Universal AC Cable, 036-5530-00 ONLY)*

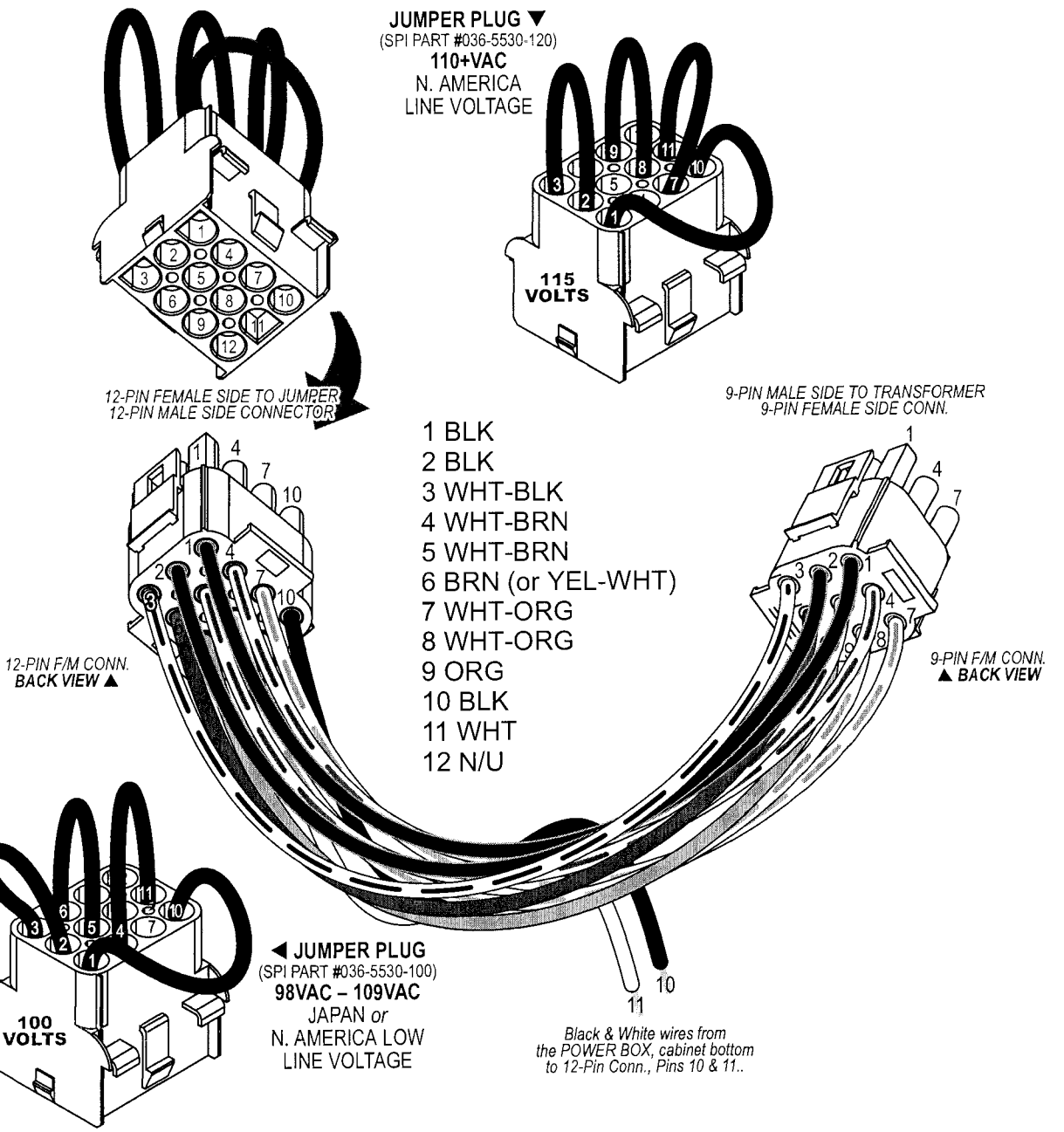

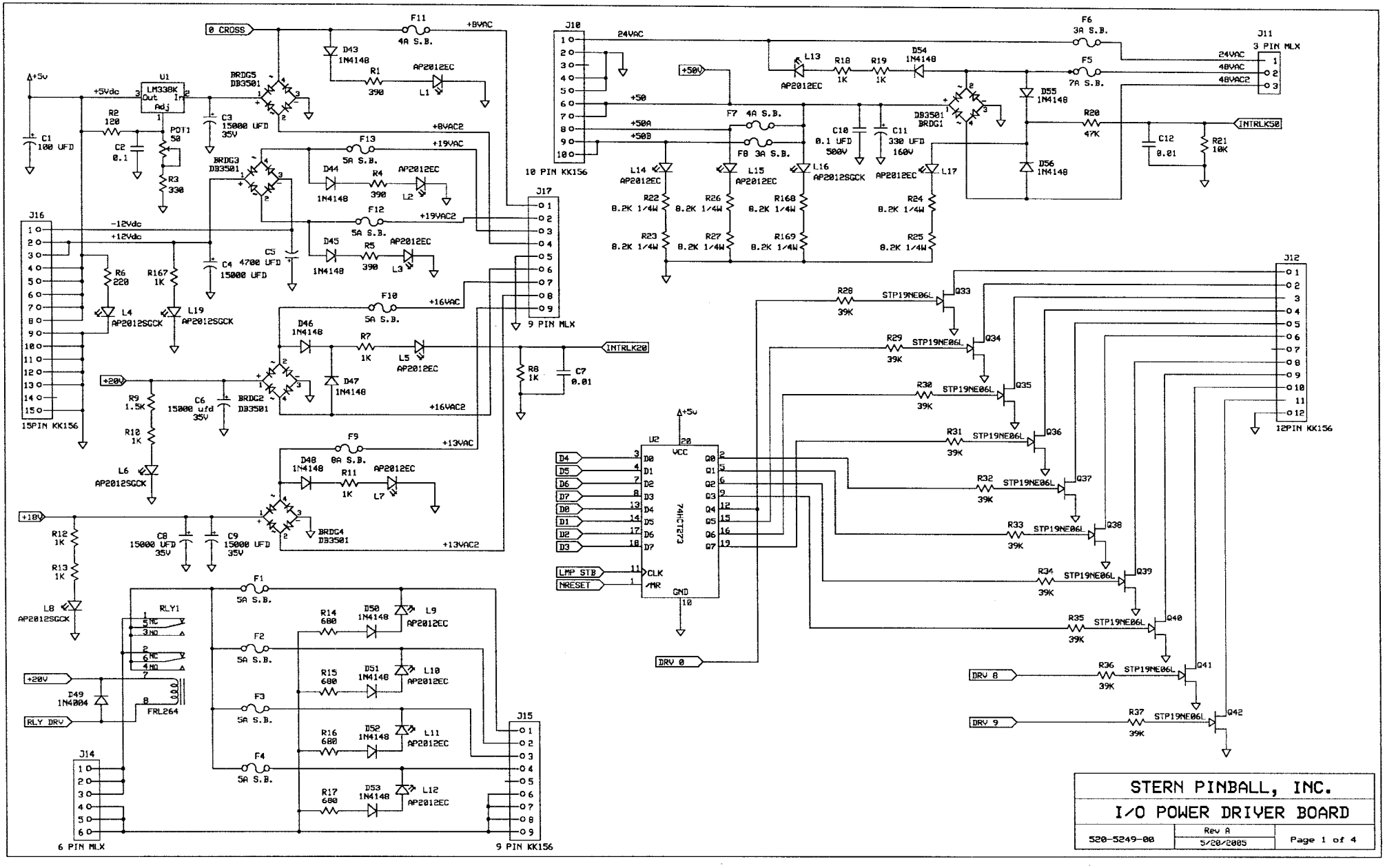

STERN PINBALL, INC.		
I/O POWER DRIVER BOARD		
520-5249-00	Rev A 5/20/2005	Page 1 of 4

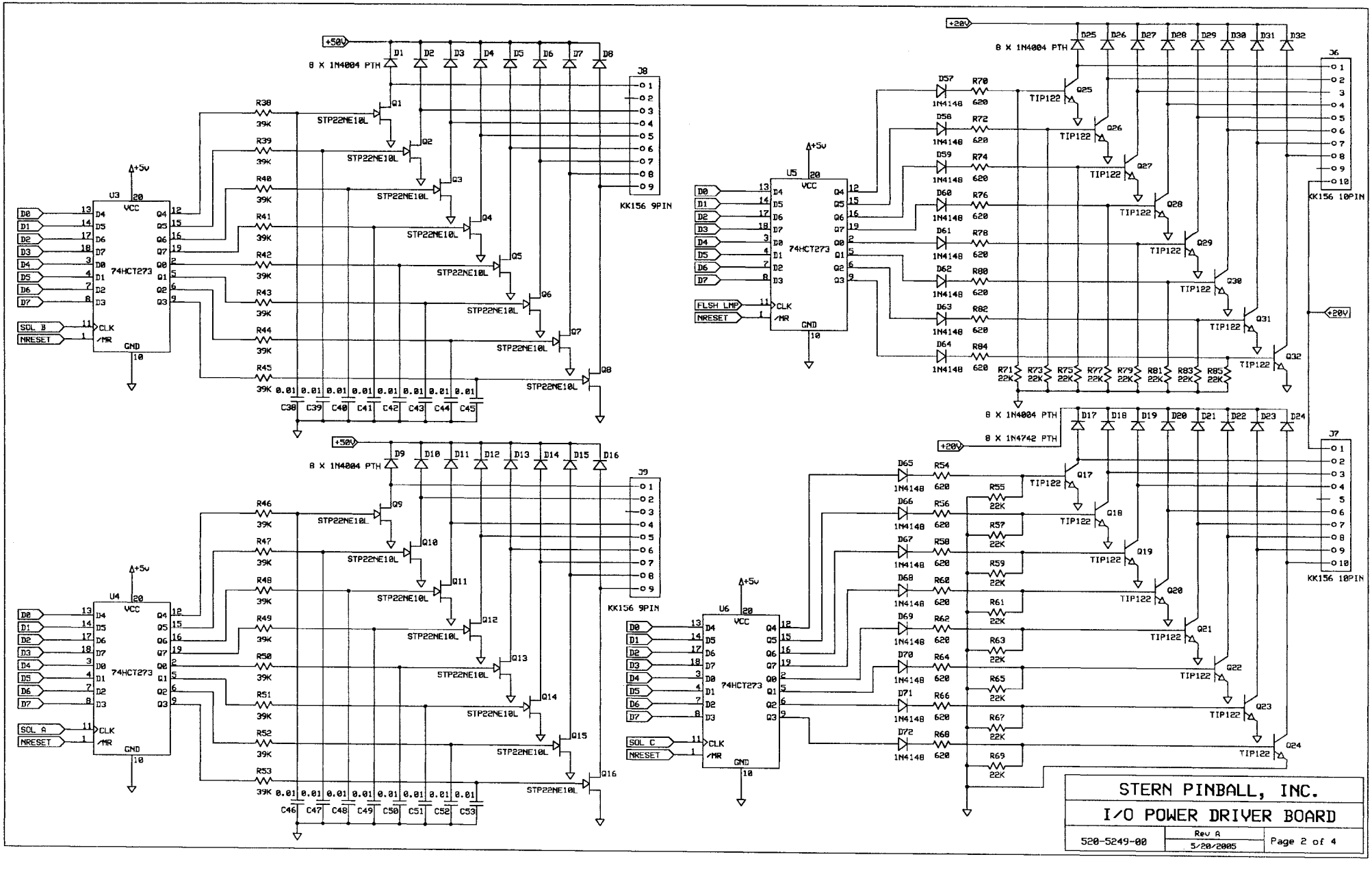
+50V
8 X 1N4004 PTH
D1 D2 D3 D4 D5 D6 D7 D8
J8
KK156 9PIN
R38 R39 R40 R41 R42 R43 R44 R45
39K
Q1 Q2 Q3 Q4 Q5 Q6 Q7 Q8
STP22NE10L
C38 C39 C40 C41 C42 C43 C44 C45
0.01
U3
74HCT273
VCC
GND
+5V
D0 D1 D2 D3 D4 D5 D6 D7
SOL B
NRESET
CLK
/MR
+20V
8 X 1N4004 PTH
D25 D26 D27 D28 D29 D30 D31 D32
J6
KK156 10PIN
D57 D58 D59 D60 D61 D62 D63 D64
1N4148
R70 R72 R74 R76 R78 R80 R82 R84
620
Q25 Q26 Q27 Q28 Q29 Q30 Q31 Q32
TIP122
R71 R73 R75 R77 R79 R81 R83 R85
22K
U5
FLSH LMP
NRESET
+50V
8 X 1N4004 PTH
D9 D10 D11 D12 D13 D14 D15 D16
J9
KK156 9PIN
R46 R47 R48 R49 R50 R51 R52 R53
39K
Q9 Q10 Q11 Q12 Q13 Q14 Q15 Q16
STP22NE10L
C46 C47 C48 C49 C50 C51 C52 C53
0.01
U4
74HCT273
VCC
GND
+5V
D0 D1 D2 D3 D4 D5 D6 D7
SOL A
NRESET
CLK
/MR
+20V
8 X 1N4004 PTH
8 X 1N4742 PTH
D17 D18 D19 D20 D21 D22 D23 D24
J7
KK156 10PIN
D65 D66 D67 D68 D69 D70 D71 D72
1N4148
R54 R56 R58 R60 R62 R64 R66 R68
620
R55 R57 R59 R61 R63 R65 R67 R69
22K
Q17 Q18 Q19 Q20 Q21 Q22 Q23 Q24
TIP122
U6
74HCT273
VCC
GND
+5V
D0 D1 D2 D3 D4 D5 D6 D7
SOL C
NRESET
CLK
/MR
STERN PINBALL, INC.
I/O POWER DRIVER BOARD
520-5249-00
Rev A
5/20/2005
Page 2 of 4

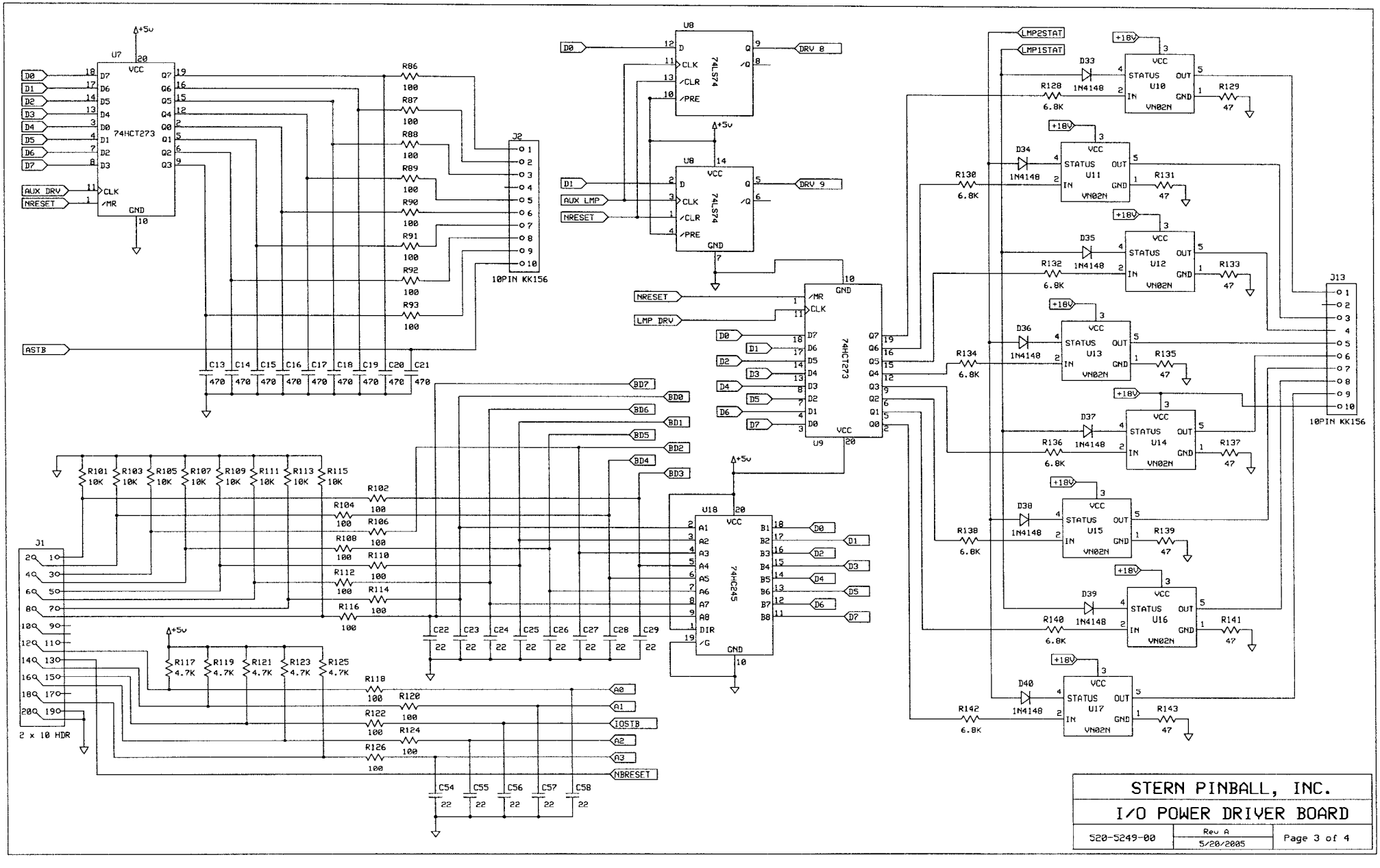

STERN PINBALL, INC.

I/O POWER DRIVER BOARD

520-5249-00	Rev A 5/20/2005	Page 3 of 4

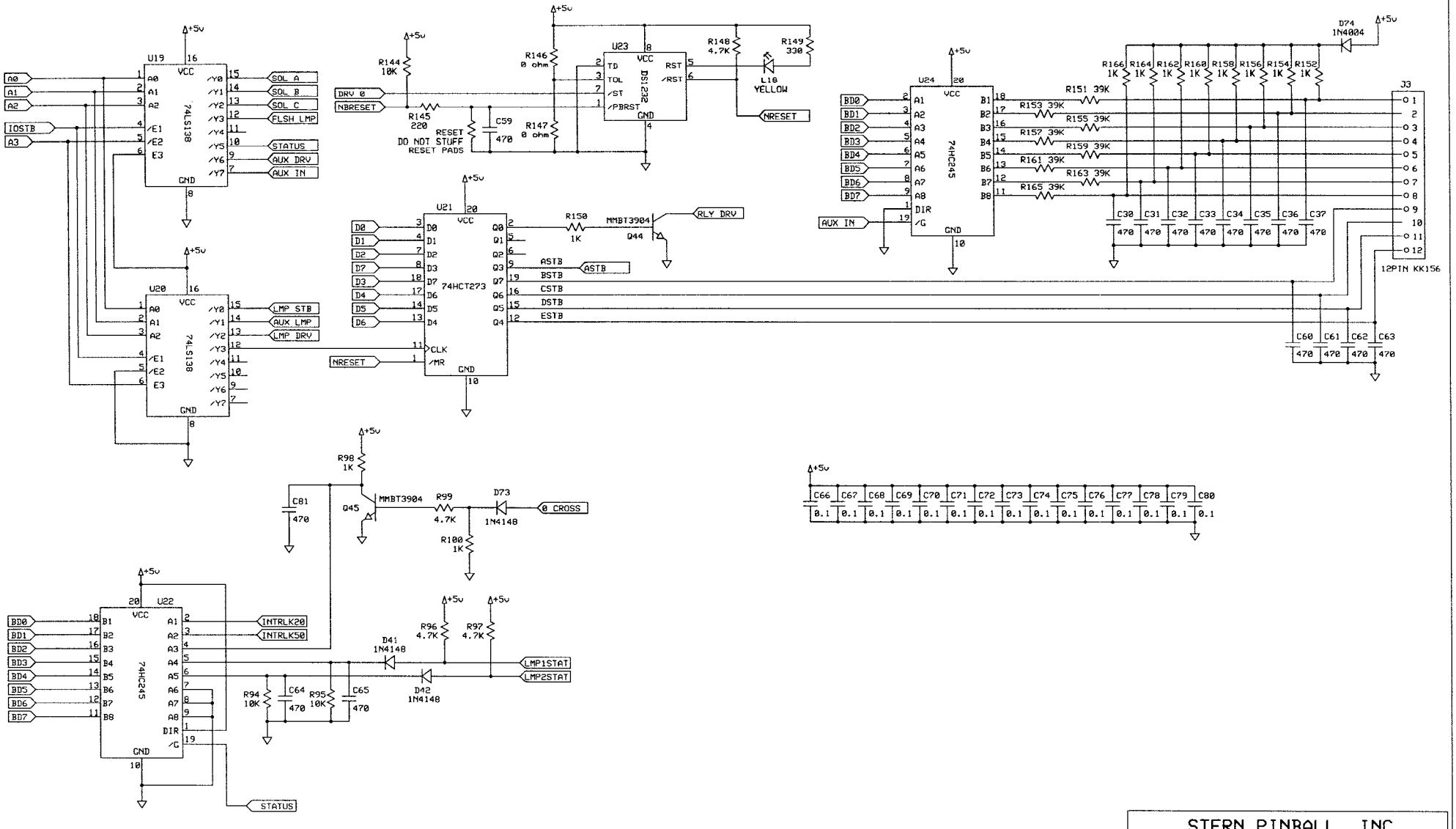

STERN PINBALL, INC.		
I/O POWER DRIVER BOARD		
520-5249-00	Rev A 5/20/2005	Page 4 of 4

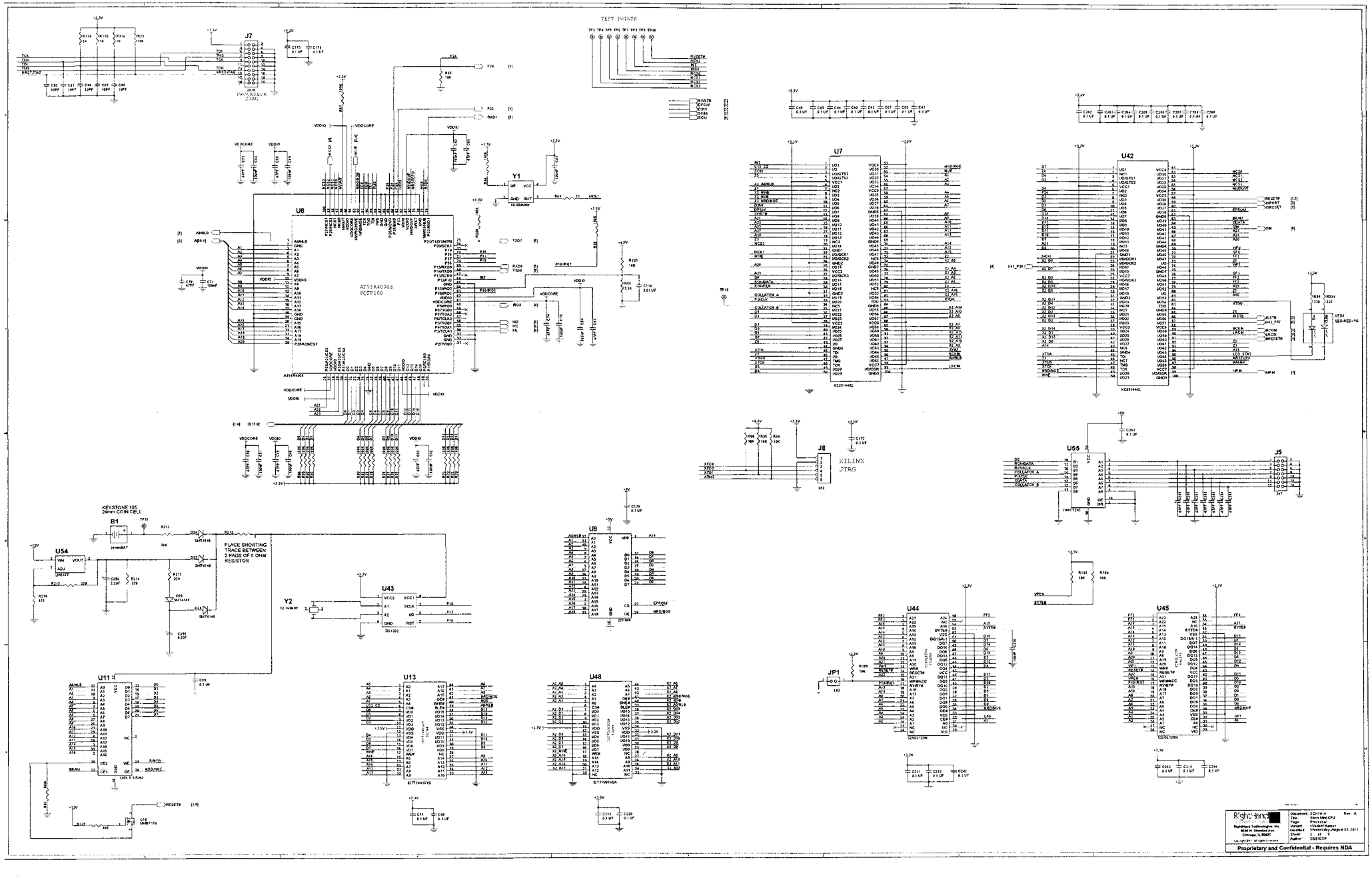
TEST POINTS
J7
PROCESSOR JTAG
U8
AT91R4008 PQFP100
Y1
U7
XC95144XL
U42
XC95144XL
J8
XILINX JTAG
U55
J5
KEYSTONE 105 24mm COIN CELL
B1
U54
PLACE SHORTING TRACE BETWEEN 2 PADS OF 0 OHM RESISTOR
Y2
U43
DS1302
U9
U44
U45
JP1
U11
U13
U48
Proprietary and Confidential - Requires NDA

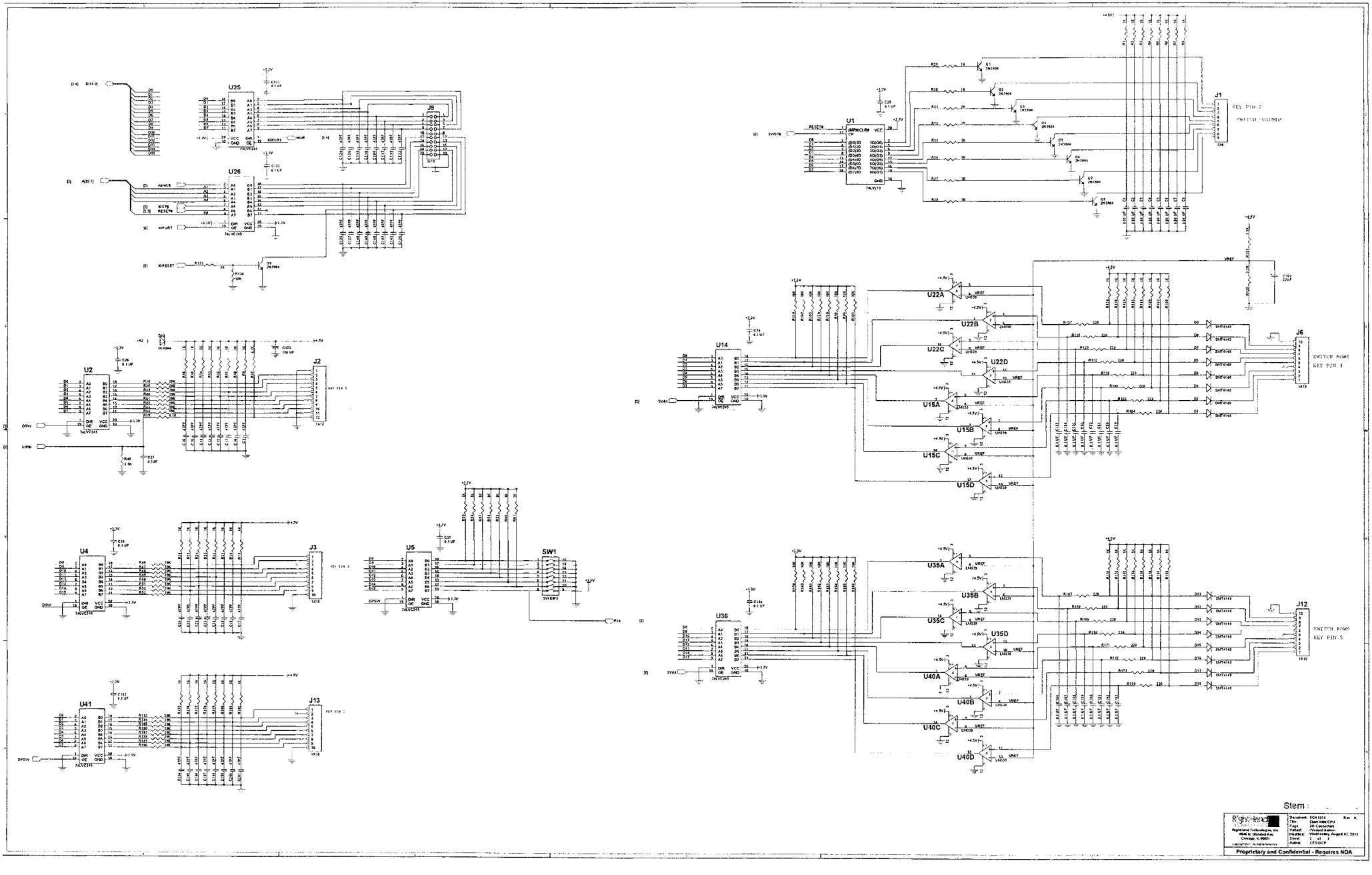
U25
U26
J9
U1
J1
KEY PIN 2
U2
J2
U14
J6
SWITCH ROWS
KEY PIN 4
U22A
U22B
U22C
U22D
U15A
U15B
U15C
U15D
U4
J3
U5
SW1
U36
J12
SWITCH ROWS
KEY PIN 5
U35A
U35B
U35C
U35D
U40A
U40B
U40C
U40D
U41
J13
Stem :
Registered Technologies, Inc.
Document: SCH1014
Rev: A
Title: Stem Idea CPU
Page: 10 Connectors
Variant: Without Buttons
Modified: Wednesday, August 03, 2011
Sheet: 2 of 6
Author: CES/GCP
Proprietary and Confidential - Requires NDA

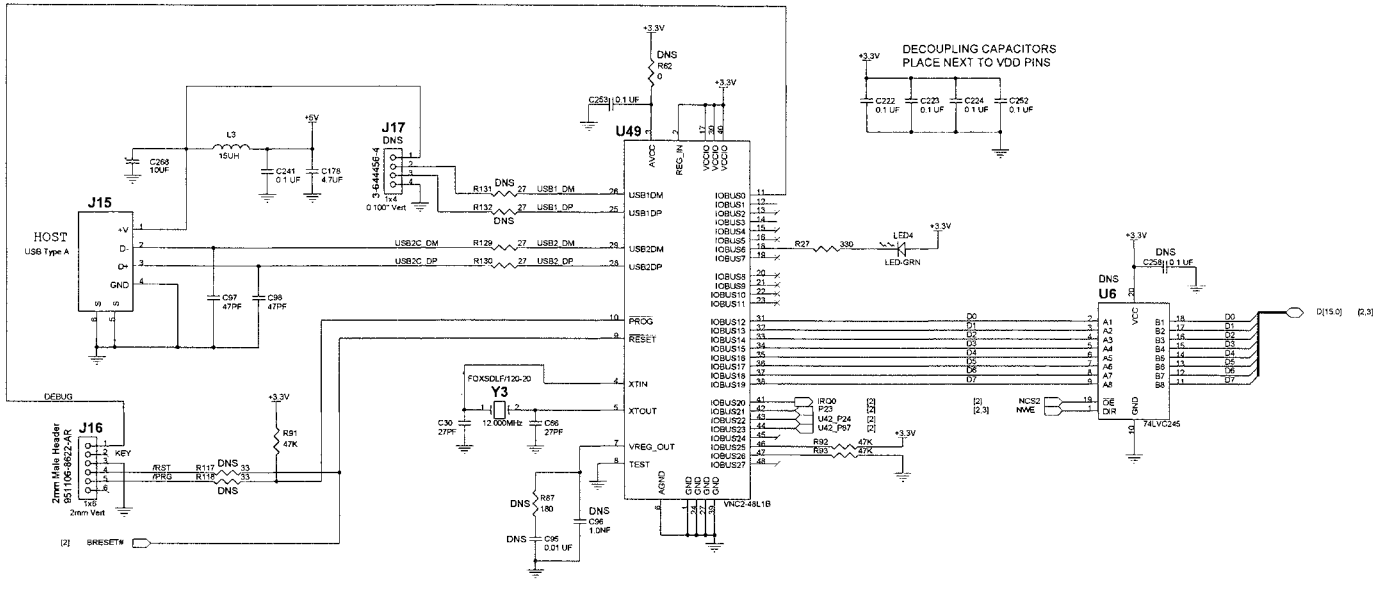

Stern

RightHand Technologies, Inc. 6542 N. Olmsted Ave. Chicago, IL 60631	Document: SCH1014 Rev: A Title: Stern Mav CPU Page: USB Variant: <Variant Name> Modified: Wednesday, August 03, 2011 Sheet: 4 of 6 Author: CEPAGCP

Copyright 2011 All Rights Reserved

Proprietary and Confidential - Requires NDA

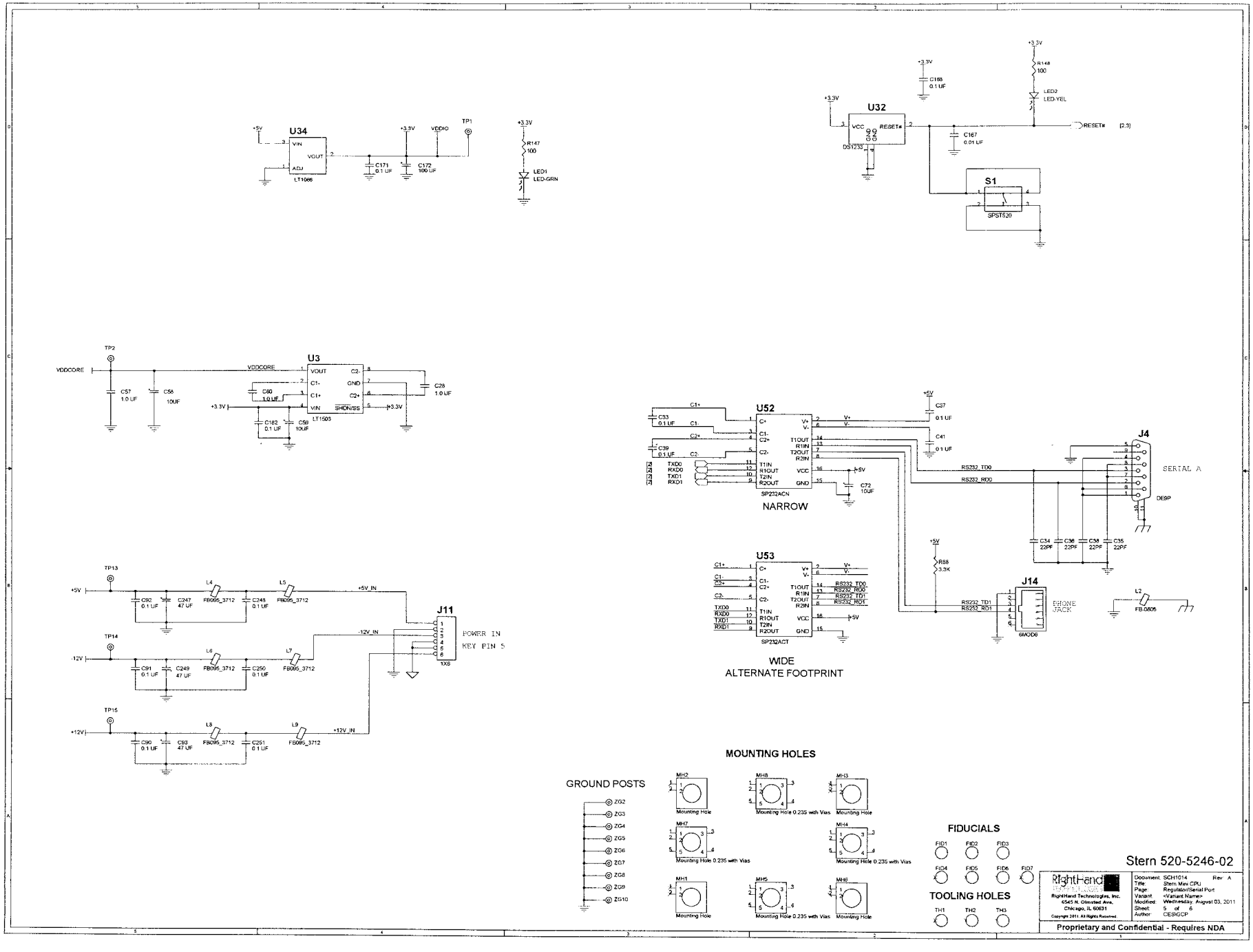
U34
LT1086
VIN
VOUT
ADJ
+5V
+3.3V
VDDIO
TP1
C171
0.1 UF
C172
100 UF
R147
100
LED1
LED-GRN
U32
DS1233
VCC
RESET#
GND
C168
0.1 UF
R148
100
LED2
LED-YEL
C167
0.01 UF
RESET#
[2,3]
S1
SPST520
TP2
VDDCORE
U3
LT1503
VOUT
C1-
C1+
VIN
C2-
GND
C2+
SHDN/SS
C57
1.0 UF
C58
10UF
C60
1.0 UF
C182
0.1 UF
C59
10UF
C28
1.0 UF
U52
SP232ACN
NARROW
C33
0.1 UF
C39
0.1 UF
C37
0.1 UF
C41
0.1 UF
C72
10UF
RS232_TD0
RS232_RD0
J4
SERIAL A
DE9P
C34
22PF
C36
22PF
C38
22PF
C35
22PF
U53
SP232ACT
WIDE
ALTERNATE FOOTPRINT
R88
3.3K
J14
PHONE JACK
6MOD6
L2
FB-0805
TP13
TP14
TP15
+5V
-12V
+12V
C92
0.1 UF
C247
47 UF
C248
0.1 UF
C91
0.1 UF
C249
47 UF
C250
0.1 UF
C90
0.1 UF
C93
47 UF
C251
0.1 UF
L4
L5
L6
L7
L8
L9
FB095_3712
+5V_IN
-12V_IN
+12V_IN
J11
POWER IN
KEY PIN 5
1X6
MOUNTING HOLES
GROUND POSTS
ZG2
ZG3
ZG4
ZG5
ZG6
ZG7
ZG8
ZG9
ZG10
MH1
MH2
MH3
MH4
MH5
MH6
MH7
MH8
Mounting Hole
Mounting Hole 0.235 with Vias
FIDUCIALS
FID1
FID2
FID3
FID4
FID5
FID6
FID7
TOOLING HOLES
TH1
TH2
TH3
Stern 520-5246-02
RightHand
RightHand Technologies, Inc.
6545 N. Olmsted Ave.
Chicago, IL 60631
Copyright 2011. All Rights Reserved.
Document: SCH1014 Rev A
Title: Stern Mini CPU
Page: Regulator/Serial Port
Variant: <Variant Name>
Modified: Wednesday, August 03, 2011
Sheet: 5 of 6
Author: CESIGCP
Proprietary and Confidential - Requires NDA

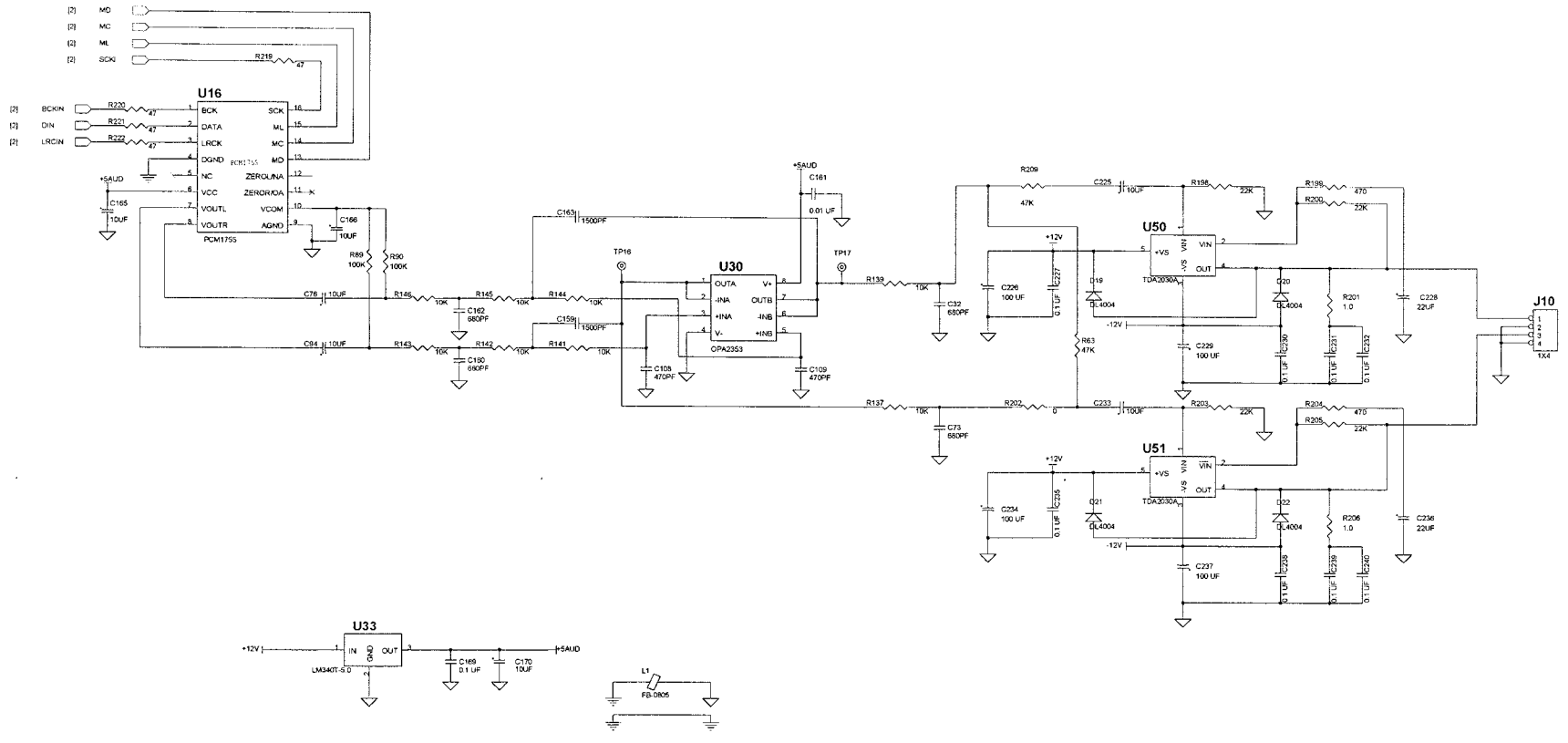

Stern 520-5246-02

RightHand Technologies, Inc.
6545 N. Olmsted Ave.
Chicago, IL 60631

Document: SCH1014 Rev: A
Title: Stern Mini CPU
Page: Audio DAC
Variant: <Variant Name>
Modified: Wednesday, August 03, 2011
Sheet: 6 of 6
Author: CESIGCP

Copyright 2011. All Rights Reserved.

Proprietary and Confidential - Requires NDA

This page is intentionally blank