Gremlin/SEGA

ASTRO BLASTER™

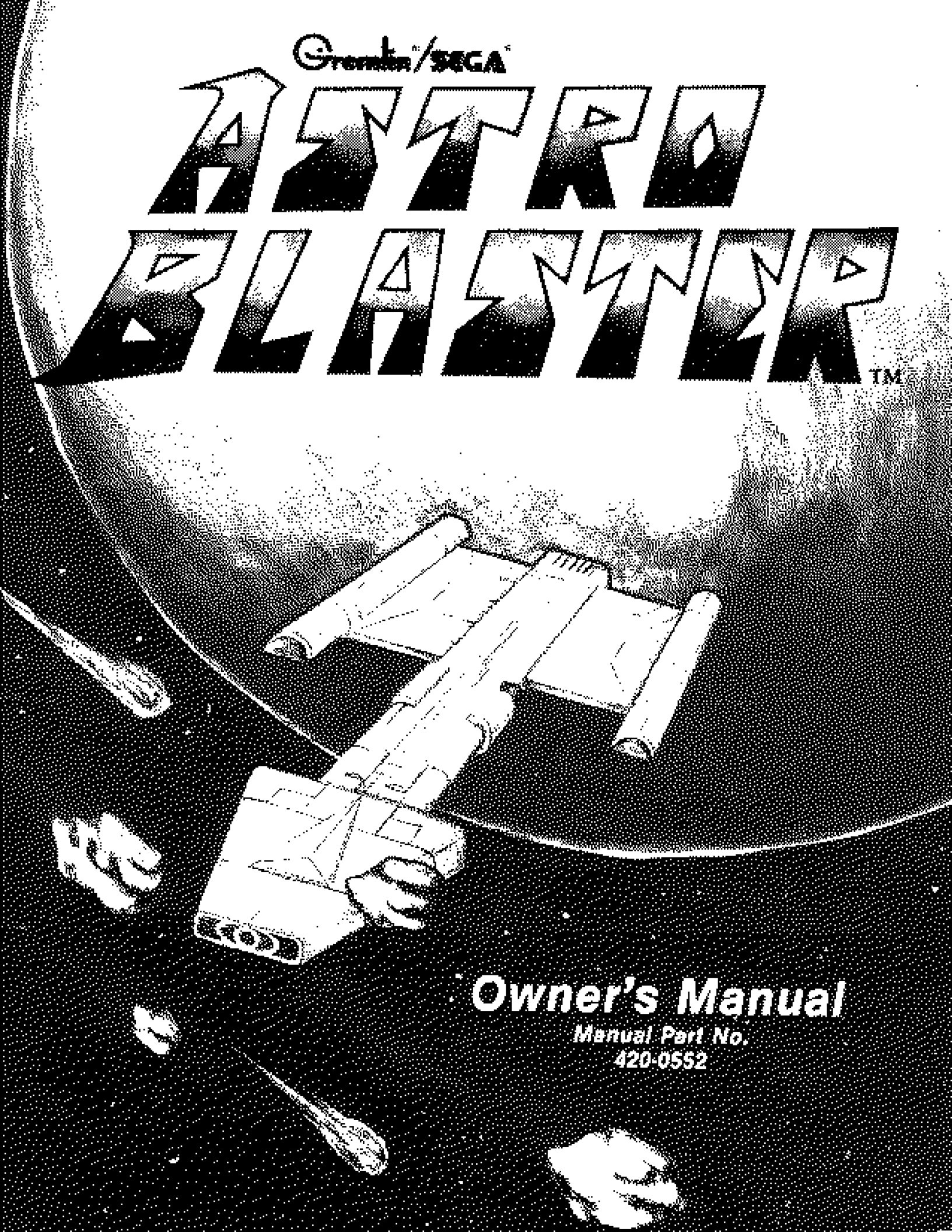

Owner's Manual

Manual Part No.
420-0552

ASTRO BLASTER™

OWNER'S MANUAL

MANUFACTURED
BY
Gremlin®/SEGA®
TLX 910-335-1621

ASTRO BLASTER OWNER'S MANUAL
Copyright © 1981 by Gremlin ®/SEGA®, All Rights Reserved

table of contents

Introduction 1
Game Concept 3
Game Set-Up and Inspection 5
G-80 Theory of Operation 8
Maintenance Procedures 14
Game Adjustments 17
Parts Catalog 20
Schematics 48

introduction

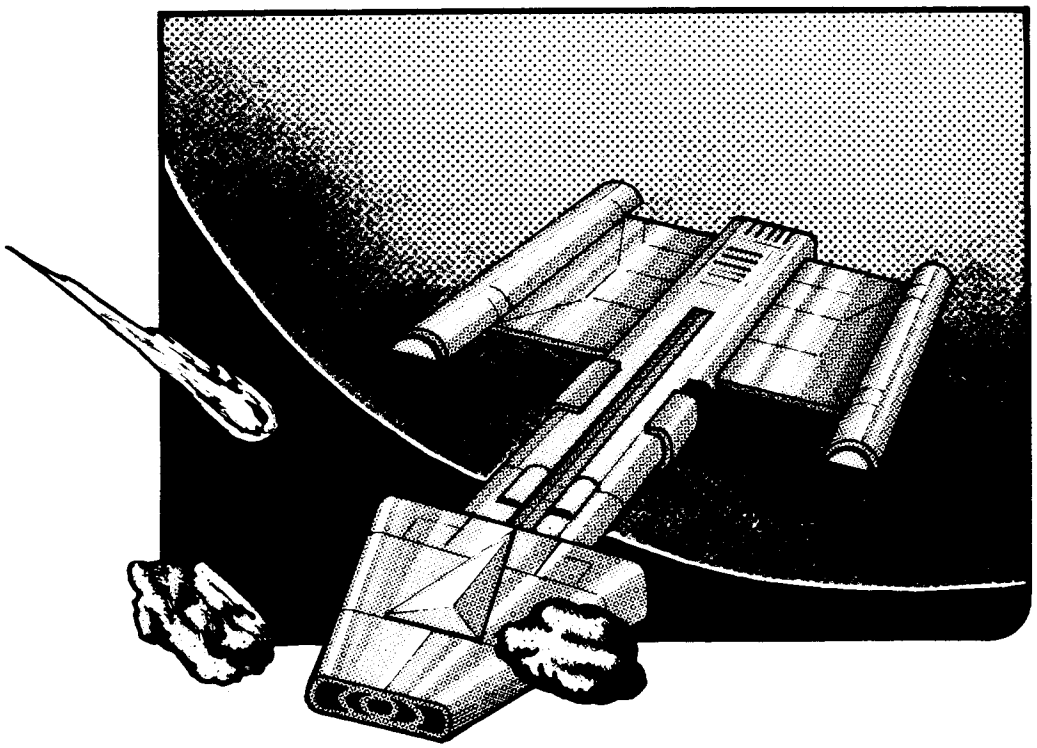

Astro Blaster is an electronic game that makes extensive use of digital integrated circuitry and television monitor concepts. This manual is designed for the maintenance technician who possesses a general knowledge of solid state circuitry, microprocessor and digital integrated circuitry, and TV monitor concepts. Any individual **not** knowledgeable in these areas **should not** attempt repair of the electronic portion of the game.

Gremlin's new G-80 system will make troubleshooting easy. Each board has a separate function and most problems can immediately be isolated to a single board. The individual boards contain less circuitry than if they were combined on one or two boards. This results in faster and easier servicing. The new G-80 system gives Gremlin a lot more flexibility in designing new games. Increased ROM capability and the addition of speech means that new Gremlin games will be more exciting and even more profitable. If you have any questions not answered in this manual, call Gremlin/SEGA Customer Service, (714) 277-8700.

ASTRO BLASTER
1
2

game concept

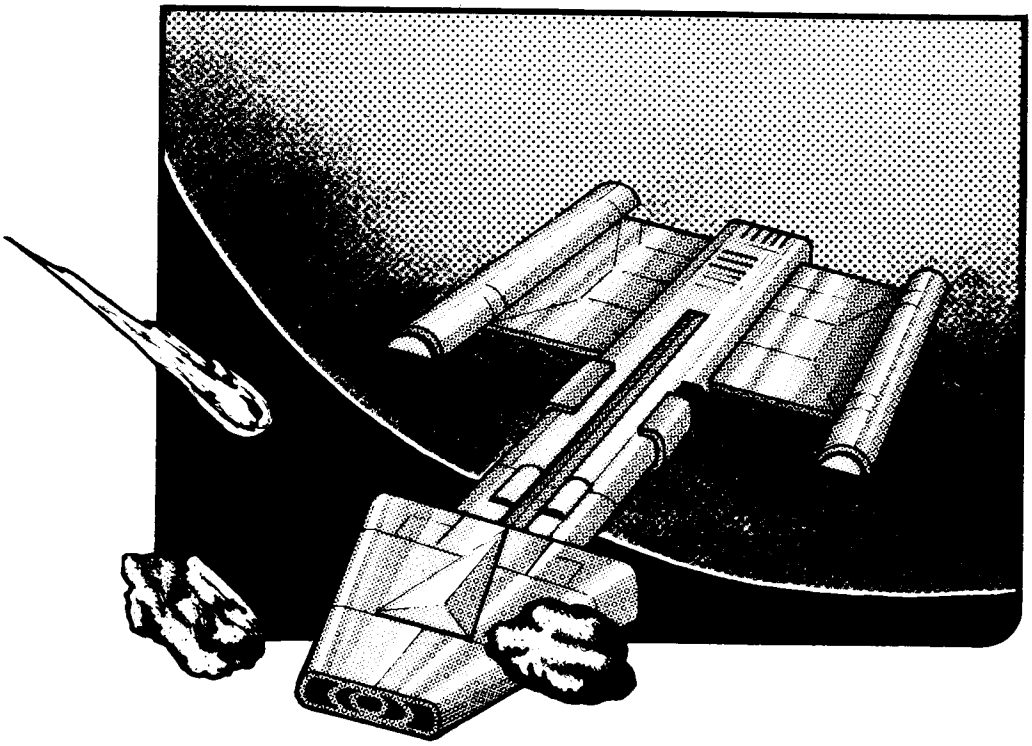

Astro Blaster is a one or two player game in which players must advance through squadrons of alien ships in an attempt to dock with the mother ship. Players move their ship left or right and shoot at attacking squadrons. A special time warp allows the player to slow down the alien space ships and their laser fire, while maintaining his own ship and laser fire at normal speed.

Voice Command

Astro Blaster is Gremlin/SEGA's first video game with speech synthesis. As players go through the game play, each step is directed by the voice of mission control. Mission control keeps players informed of fuel status, provides a countdown on warp, keeps track of the number of ships remaining, and monitors the players' laser temperature.

Game Action

As players enter each new sector they encounter a different number of alien squadrons. Players must destroy all ships in each squadron to pass through the sector. One squadron of rockets is extremely difficult to destroy, but players can pass through this squadron by hitting a few enemy ships. Once a player has destroyed all the squadrons in that sector, he enters an asteroid belt. He must maneuver and shoot his way through the asteroids to reach the mother ship. If fuel is critically low when the player enters the asteroid belt, he can receive extra fuel by shooting the red fireballs interspersed among the asteroids. After passing through the asteroid belt, the player's ship docks with the mother ship and refuels.

Alien Ships

There are 29 different alien squadrons players encounter as they move through the different sectors. Every new sector increases in difficulty with different numbers of squadrons in each sector. Each alien ship has its own individualized sounds, movements and firing capability.

Fuel and Laser Temperature

During their game, players must keep track of fuel consumption. As the player's ship moves through the sector, it consumes fuel. The player must ensure he has enough fuel to advance through the sector and dock with the mother ship. Extra fuel can only be obtained by shooting red fireballs or docking with the mother ship. The screen also displays the laser temperature. As players fire, the laser temperature rises. When they cease firing, it cools down. If the laser overheats, players lose their laser fire until it cools down.

Time Warp

By depressing the warp button, players slow down the enemy ships and their laser fire while maintaining his own at normal speed. Players receive one warp per ship and are awarded one warp upon docking, if he has used his warp in the previous sector.

Scoring

Each alien ship destroyed carries a different point value. Players also receive double points for destroying an alien ship when their fuel is in the red. To add further excitement, there are 25 tasks that a player performs during the course of the game and receives a secret bonus. Players do not know what these tasks are, but a good player will keep track. The 25 tasks are consistent throughout the game. Players also receive a bonus for any fuel they have left when they dock with the mother ship.

With a two-player game, players alternate at the conclusion of each sector, not after each ship. Players receive 3 to 5 ships, which is operator adjustable. The game is over when a player runs out of fuel, loses all his ships or crashes while attempting to dock with the mother ship. The top three scores are displayed and the game ranks players from 1 to 99.

game set-up and inspection

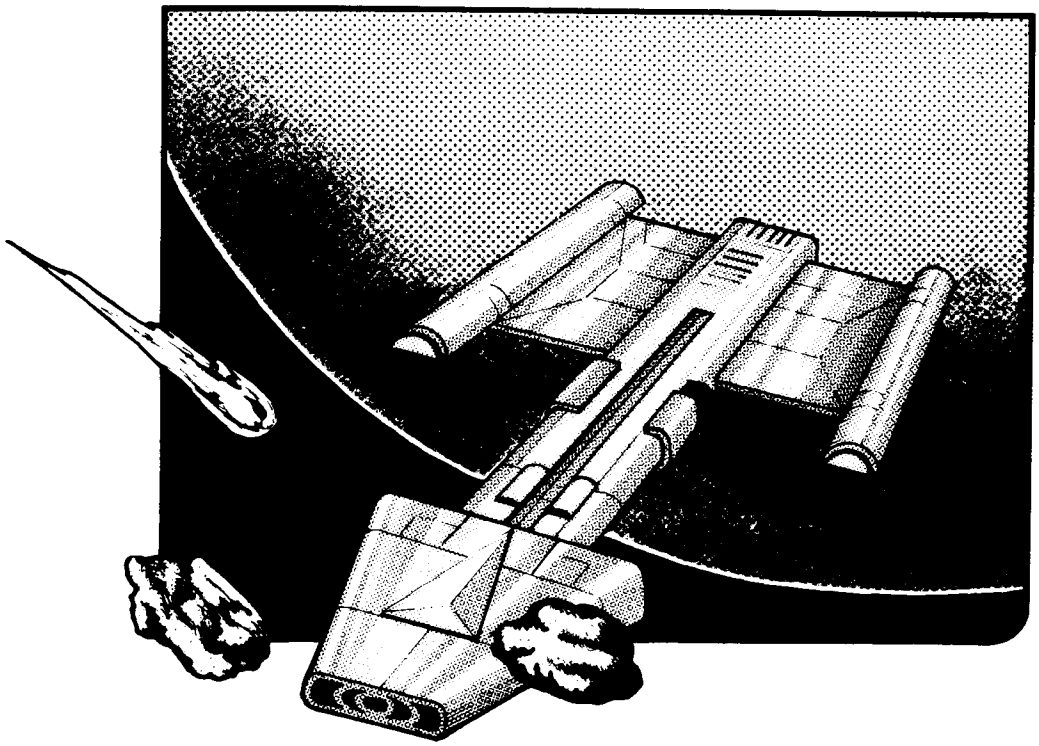

Your Astro Blaster game is ready to play immediately upon arrival. But, **before** you plug in the game, open the rear access panel and make a general inspection of the interior of the game. The following items should be checked to insure no shipping damage has occurred.

1. Inspection

a) Are the fuses intact?
There are five fuses (not counting the monitor fuses which are detailed in the monitor manual accompanying this game). One fuse is located on the AC junction box. The other four are on the power supply PC board.

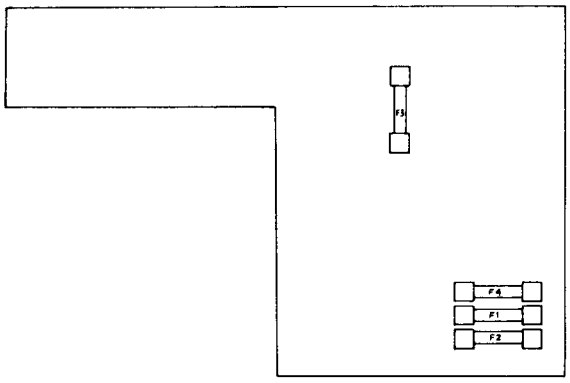

b) Are the connectors firmly inserted?
Proper connector fittings must be checked before game power is applied. Check all related connectors for good contact. Although disconnected connectors are easily spotted, poor contacts are difficult to locate. The connectors should therefore be pushed in firmly and then loosened to spot poor connections. When testing the PC board connectors, **always** turn off the power.

c) Cabinet Inspection
Inspect the cabinet interior and exterior to ensure that no damage has occurred during shipping. Check to ensure graphics are in place, monitor is not damaged and that the overall cabinet is in good condition.

2. Voltage Selection

Before plugging in your game, make sure that the game voltage is correct for your location. Locate the two leads from the AC junction box to the power transformer. For 100 VAC, they should be connected to terminals 1 and 2 on the power transformer. For 110 VAC, connect 1 and 3, and for 220 VAC applications, they should be connected to 1 and 4.

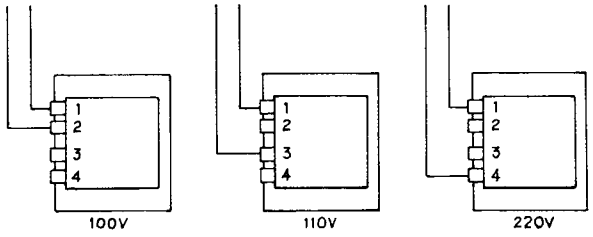

You will also notice on the AC junction box that there is a safety interlock switch. When the rear panel is in place the switch is depressed and the game receives power. Removing the rear panel, the switch returns to its original position and the power is cut off from the game. For servicing, this switch can be pulled out and power will be restored.

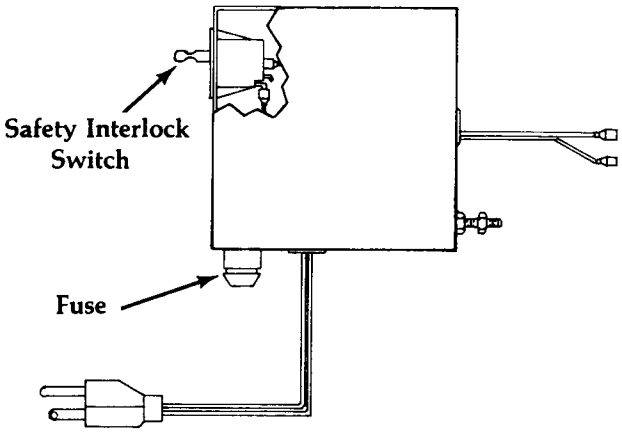

3. Game Specifications

Power	100 VAC, 60 HZ (nominal), 175 watts 110 VAC, 60 HZ (nominal), 175 watts 220 VAC, 60 HZ (nominal), 175 watts
Dimensions	25½ inches wide × 28 inches depth (64.77 cm wide × 71.12 cm depth) 67 inches height (170.18 cm height)

4. Important Notes

a) The following note is included in compliance with FCC rules:
WARNING: This equipment generates, uses, and can radiate radio frequency energy and if not installed and used in accordance with the instructions manual, may cause interference to radio communications. As temporarily permitted by regulation, it has not been tested for compliance with the limits for Class A computing devices pursuant to Subpart J of Part 15 FCC Rules, which are designed to provide reasonable protection against interference in which case the user at his own expense will be required to take whatever measures may be required to correct the interference.

b) **Miscellaneous**
Never remove circuit board connections while power is on.
Never replace any components with anything other than exact replacement parts
Do Not replace fuses with anything other than the proper value. A blown fuse indicates an overload condition within the game. Replacing the fuse with a higher value can cause severe damage to internal components, if an overload occurs.

Correspondence regarding this game should be addressed to:
Gremlin/SEGA
8401 Aero Drive
San Diego, California 92123
(714) 277-8700

G-80 theory of operation

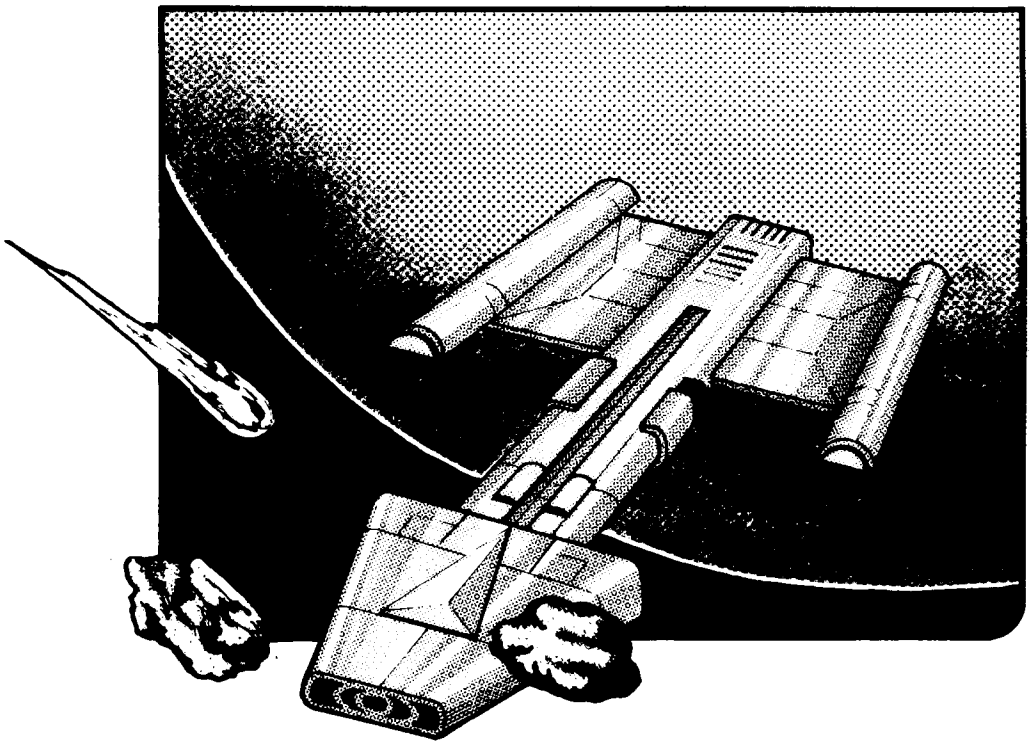

Game Block Diagram

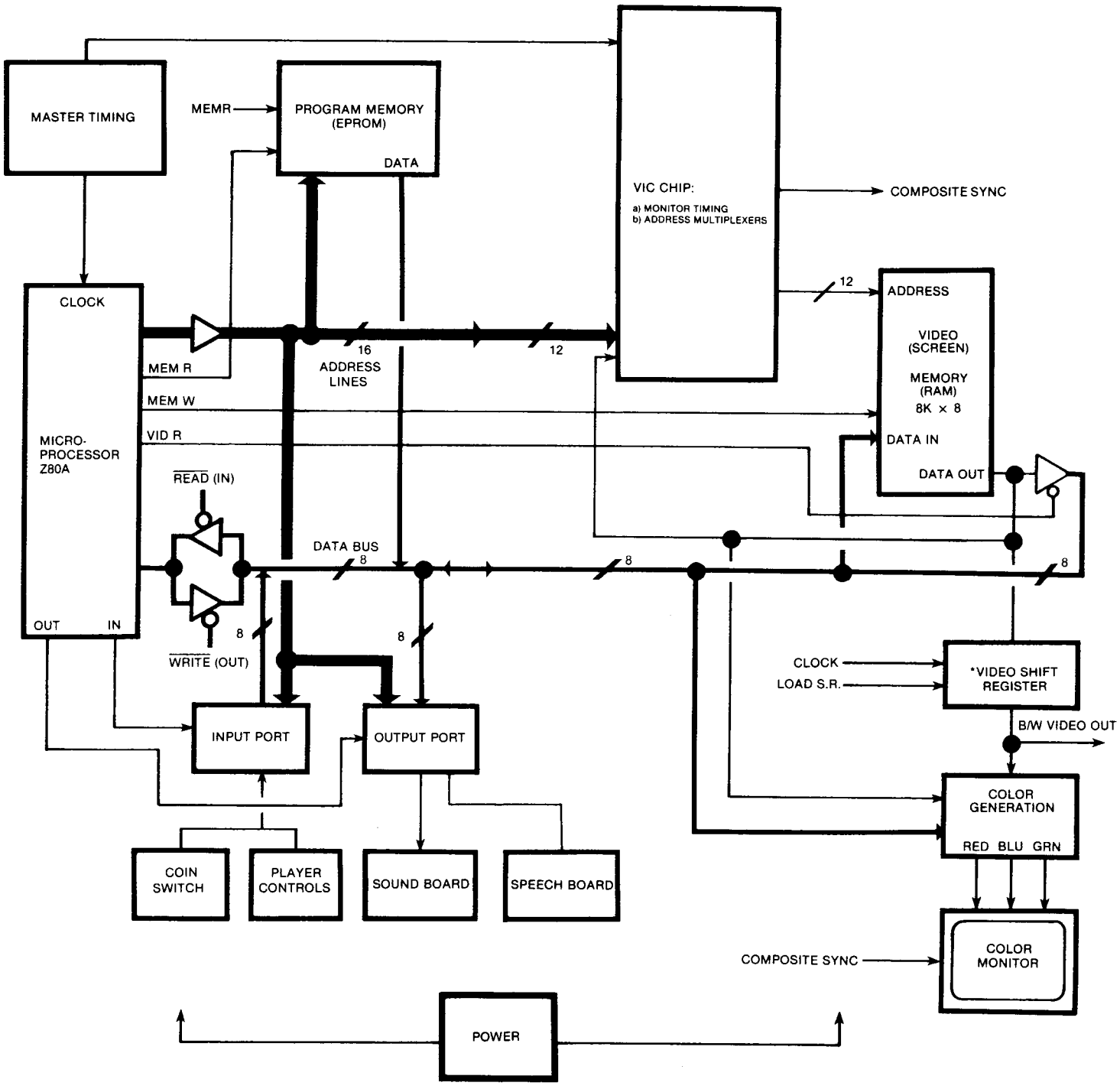

* DENOTES CIRCUITRY CONTAINED IN VIC CHIP.

1. G-80 Boards:

The new G-80 system consists of five boards that plug into a mother board.

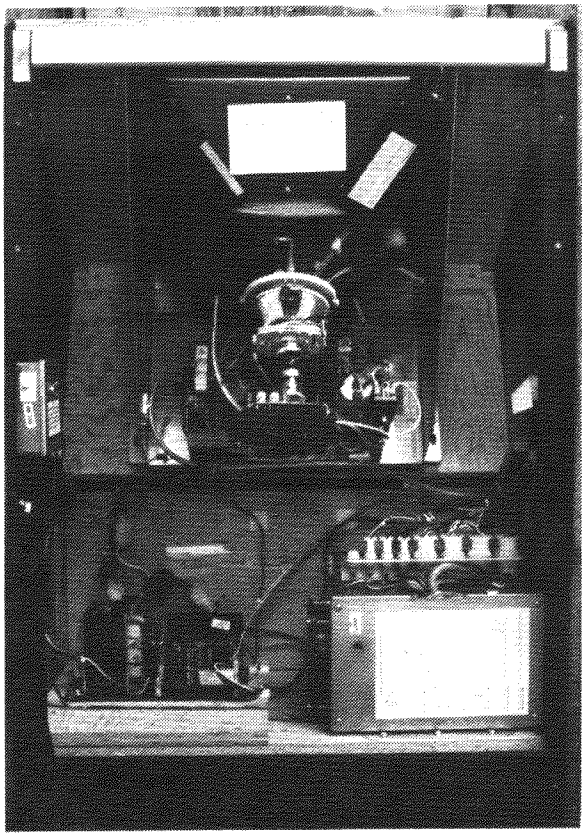

They are the CPU, Speech, Sound, Video and EPROM boards. They plug into the mother board in a card cage system to simplify repairs and cut down on interference to outside communications systems. The mother board is cross-wired to allow for the boards to be plugged-in in any order. Listed below are the bus pin assignments on the mother board:

1	Ground	A	Ground
2	A15	B	A7
3	A14	C	A6
4	A13	D	A5
5	A12	E	A4
6	A11	F	A3
7	A10	H	A2
8	A9	J	A1
9	A8	K	A0
10	D7	L	D3
11	D6	M	D2
12	D5	N	D1
13	D4	P	D0
14	WAIT	R	RESET
15	INT	S	EDGINT
16	NMI	T	EXT
17	EXT SEL	U	OUT
18	MEMR	V	MEMW
19	INPUT	W	OUTPUT
20	RFSH	X	MREQ
21	INTACK	Y	AC
22	+5V	Z	+5V
23	+5V	a	+5V
24	−5V	b	−5V
25	+12V	c	+12V
26	−12V	d	−12V
27		e	
28	HALT	f	MI
29	/2	h	*
30	*	j	*
31	SRC	k	*
32		l	
33		m	
34		n	
35		p	
36		r	
37		s	
38		t	
39		u	
40		v	
41		w	
42		x	
43		y	
44	Ground	z	Ground

* For Development Purposes Only

a) CPU BOARD (Refer to CPU Schematic, sheets 6 and 7)

The CPU board is completely timed with the video board. But, for testing purposes it contains its own clock circuit, powered by an 8.000 MHZ crystal. Pin 17 is the external clock select and is grounded when the video board is plugged-in. When the external clock pulse comes in through pin T, it goes directly to the CPU and the entire CPU clock circuit is disabled. The WAIT signal, entering in at pin 14, is used to synchronize slower memory accessed by the CPU. The NMI circuit, entering in at pin 16, contains a switch for activating the built-in self-test. The self-test system will be explained more fully later.

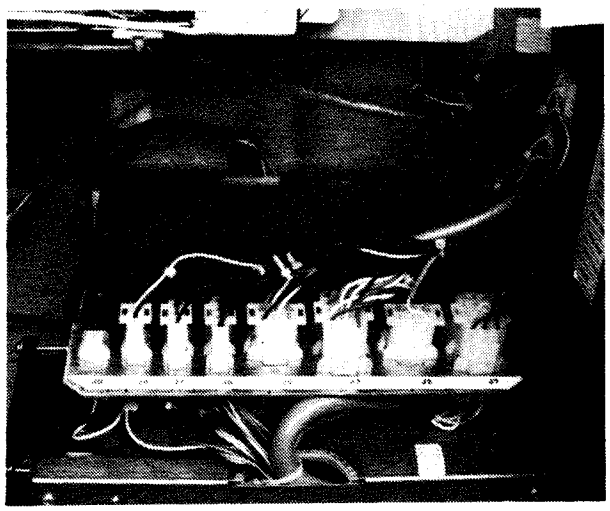

When the edge interrupt circuit, entering at pin S, goes LO, it triggers an interrupt in the CPU. The CPU stops whatever it is working on, completes the activity required by the interrupt, and then returns to the function it was performing prior to the interrupt. It is a negatively triggered interrupt, which can be disabled by the CPU at any time.

The AC signal, entering in at pin Y, combines with RESET at pin R and the input from the reset switch located on the operator panel to reset the CPU. Disregard PANEL RESET at pin 30. This circuit is used only for system development.

The CPU in Astro Blaster is a Z80A. You must **always** use a Z80A as the Z80 is not fast enough to run the game. U21 is an address bus controller. Eight of the sixteen address lines pass through U21 before addressing the RAMs and the Eprom at U25. U25 contains the data for the self-test and contains features common to all games, such as coin acceptance, credit/coin handling, power-up sequence, player 1 or 2 recognition and CPU initialization. U3 is an output port for the CPU and U4 is the input port. Connector P1, pins 23 through 40, shown on sheet 6 is not used in Astro Blaster. U15, located below U4 on the schematic, decodes memory select on the CPU board. Sheet 7 contains the coin inputs, player inputs and inputs from the operator panel. The coin circuitry contains ICs U6, U39 and U16. U9 is the input port for the coin switches and service switch. Player inputs enter through connector P1, pins 15 through 22.

b) VIDEO BOARD

The video board contains a VIC chip used in previous games (U58). The video board also contains a 15.468 MHZ crystal that generates the timing signals for video generation. Because the video board contains twice as many video RAMs, it has a more extensive graphics capability. Color capability is greatly expanded because of a color RAM, U9, which allows the program to create a wider variety of color schemes. There are 8 shades of red, 8 shades of green, and 4 shades of blue. The video board also contains circuitry (U34, U35, U36, U38, U49 and U50) to make the picture 'flip' for cocktail table models. The jumper platform at U12 must be installed for the video board to function properly. DO NOT TAMPER WITH THESE JUMPERS.

c) EPROM BOARD

The EPROM board is a relatively simple memory system. It has 23 2716 EPROMs totalling 46K bytes of memory (1 byte equals 8 bits). U24 and U30 decode all the EPROMs; U25 is the buffer IC to the data bus. In operation, any one of 23 EPROMs is selected by 5 CPU address lines.

d) SPEECH SYNTHESIS BOARD

The Speech Synthesis board contains a single-chip microcomputer (SCM), U14, an 8035. The SCM has all the basic elements of a computer, except for power, integrated in a single package. There are two main sections to the Speech Board. Section 1, schematic sheet 5, is the speech generation circuit. U7 is the system EPROM and contains all the basic programming for the 8035 CPU. The other EPROMS, U3 through U6, contain the speech information for Astro Blaster. U2 is the actual speech chip which synthesizes human speech. It operates by receiving the

data that compose speech patterns, combines them and outputs the sounds to amplifier U8 and to U11. Section 2, sheet 6, is mainly development circuitry; but, U21 is used in latching the proper 8-bit word from the CPU to select the different speech messages.

e) SOUND BOARD

The Astro Blaster G-80 Sound Board contains the circuits needed to generate all game sounds other than the speech. The Sound Board circuits are triggered through latches U32 and U33 which are connected to the data bus. The appropriate 8-bit code on the data bus is latched by U33 or U32 to activate the corresponding sound circuit. All sound board signals are mixed by IC U7 and output at P1-1. This output is again mixed with the speech sounds on the Speech Board through connector pin 1 and finally through U11. The final audio output is brought into the power supply amplifier.

2. Power Supply

The Game Power Supply (800-0128) incorporates all of the voltages and audio power amplification necessary to power Astro Blaster. In addition to the logic supply voltages available, 100 VAC and 115 VAC isolated supplies are available for the TV monitor and fluorescent lights. Also, multiple primary taps are available for using 100 VAC, 115 VAC, or 230 VAC as the input voltage.

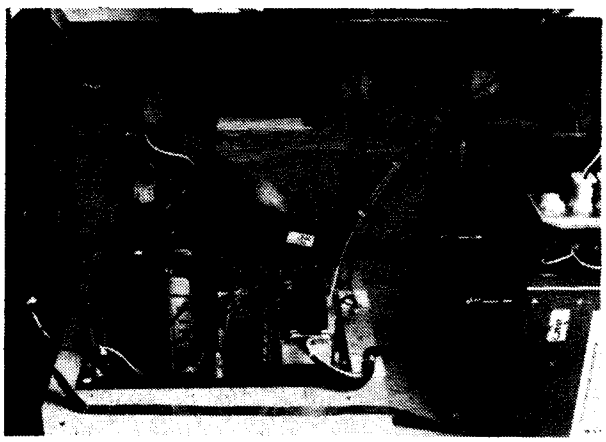

This supply was originally designed for use with the Dual Game Board or Dual Game VIC Board. Table 1 lists the ratings of the supply when all outputs are used simultaneously. This also happens to be a standard test load. These are worst case ratings (such as when the PROMS in use draw their maximum rated currents) and therefore are rarely encountered when driving Dual Game Boards.

TABLE 1

+5 V @	2A	=	10W
−5 V @	1A	=	5W
+12 V @	1.5A	=	18W
−12 V @	1A	=	12W
MONITOR & LIGHT			
100 VAC or 115 VAC			75W
TOTAL			120W

The rating of the +5V supply can be safely increased to 3.5 amps if the load currents on the other voltages are reduced. This is necessary to prevent the heat sink and transformer temperatures from increasing to the point where reliability suffers.

a) Circuit Description: The +5 volt supply consists mainly of U1 and Q5. U1 is a 723 voltage regulator IC, which contains a voltage reference, error amplifier, series pass Darlington transistor pair and a current limit transistor. Potentiometer R5 (+5V ADJ) divides the 7.15V (nominal) reference to 5.0 volts as the input to pin 5, the non-inverting input of the 723's error amp. Pin 4, the inverting input, senses the output voltage. The internal error amp maintains a voltage at U1 pin 10 which is higher than the 5.0 V output by an amount equal to the two V_{BE} drops of Darlington Q5, which acts as a current amplifier, and the IR drop across R32.

A foldback current limiter circuit is composed of R32, R2, R3, Q1 and the internal current limit transistor of U1. This circuit allows the regulator to operate normally until the load current increases

to the point where the voltage across R32 reaches the value which starts "turning on" the internal current limit transistor. This internal transistor reduces the output current of the regulator to a fraction of the "knee" current when the output is shorted to ground. This feature greatly reduces the power dissipated in Q5 when the output is accidentally short circuited. This action occurs so quickly during a short that fuse F1 should not blow. The value of the "knee" current can be increased or decreased by decreasing or increasing R3, respectively. Capacitors C4 and C5 frequency compensate the regulator so it won't oscillate, and C1 and C26 perform high frequency bypassing. Q1 is included for temperature compensation. Temperature variations of its emitter-base voltage closely match and cancel the base-emitter voltage of the internal current limit transistor. Therefore, the "knee" current of this regulator of about 6 amps stays quite constant over wide temperature variations. The short circuit current is less tham 100 ma. The +12 volt regulator uses 7.15 volts as a reference. U2 compares this voltage with the voltage at the wiper of R23 (+12V ADJ). Darlington PNP Q6 is the series pass element: Transistor Q2 and current sense resistor R12 form the current limit circuit to protect Q6 from excessive load currents. The trip point is about 3 amps. Resistor R10 shuts the circuit off even harder if the output is short circuited. Resistor R11 and electrolytic C7 form a low pass filter which prevents short current pulses from activating the current limit circuit. The −5V and −12V regulators utilize three terminal ICs, 7905 and 7912, respectively. Capacitors C2, C3, C11 and C14 bypass high frequencies so that U4 and U5 won't oscillate.

The audio power amplifier is composed of op-amp U3 and transistors Q3, Q4, Q7 and Q8. U3 provides most of the voltage gain while the transistors supply most of the current gain. This amplifier differs from previous ones in that the output stage also exhibits a voltage gain of about 2 or so that the output can swing close to both power supply rails. This allows this amplifier to supply 36 watts into 4 ohms and 24 watts into 8 ohms. These values will be less if the +12 volt or −12 volt supplies are loaded significantly and/or the line voltage is less than 115 VAC. The overall voltage gain of the circuit is set by the ratio of R20 and R28. The actual value is:

$$\frac{R20}{R28} + 1 = \frac{47K}{2.2K} + 1 = 22.4 \text{ or } 27 \text{ db}$$

Capacitor C13 determines the low frequency roll off (about 7 HZ) and forces the DC gain to be unity. Therefore, the circuit does not amplify DC voltage. The input impedance is 47k ohms and is direct coupled.

b) Adjustments:

i. Adjust R5 for 5.0V at the load. This compensates for wiring losses.

ii. Adjust R23 for 12.0V at the load.

iii. There are no adjustments for the −5V or −12V supplies or for the amplifier. The values should be −5V ± 0.2V and −12V ± 0.5V.

maintenance procedures

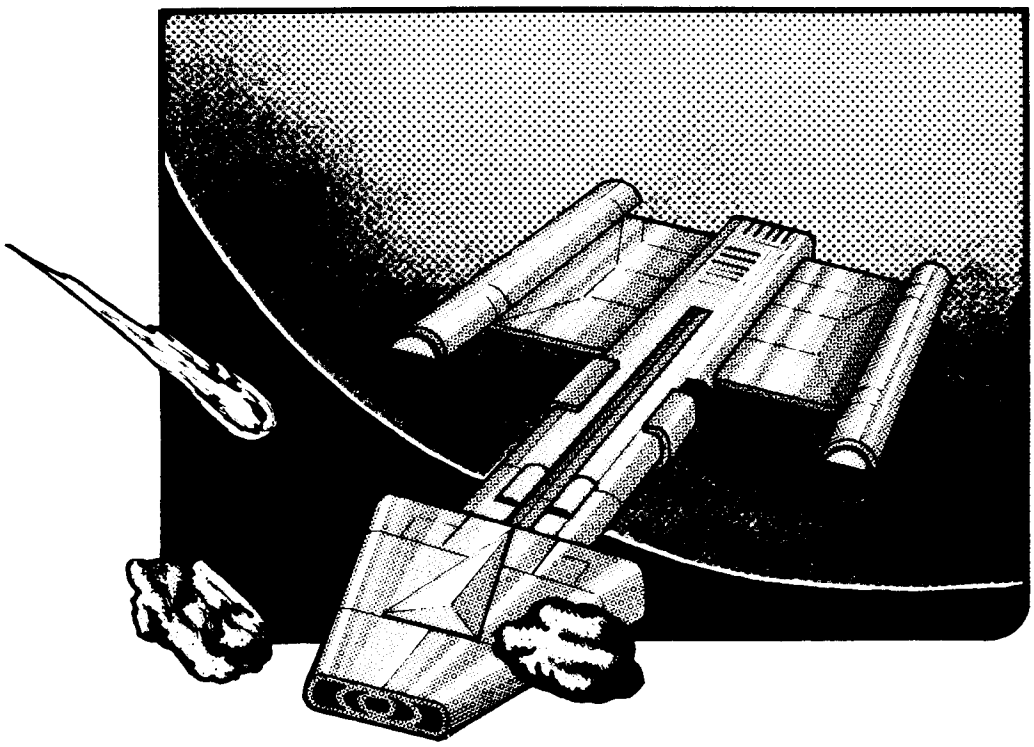

1. Self-Test

Astro Blaster contains a built-in self-test system, activated by depressing the red self-test switch located on the CPU board. If the cover to the G80 card cage is in place, the switch can be activated by putting a pen or pencil through the hole provided on the cover.

a) CPU Board RAM Test — The first test performed is a CPU Board RAM test, for IC's U26-U29. It is instantaneous and ends when the screen goes white. If there is a problem in the CPU Board, the test will not continue, and you must use standard troubleshooting techniques to isolate and repair the CPU Board. There is a red LED, called the Halt Light, located directly behind the self-test switch. When a problem in the CPU occurs, it will come on and remain lit.

b) Video RAM Test — The white screen is the beginning of the Video RAM test. If there is a problem here, the halt light comes on and flashes continuously. The screen displays:

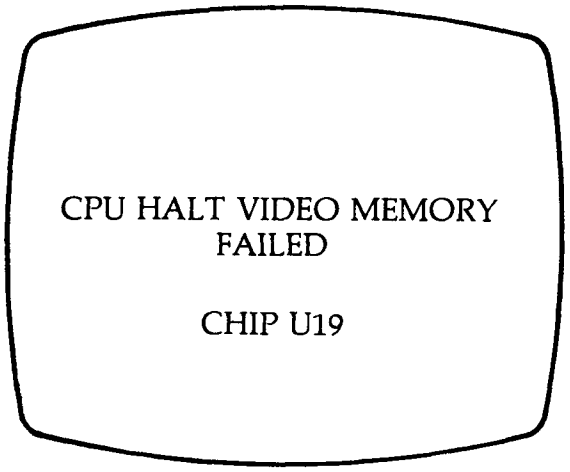

It tells you exactly which chip is defective. The rest of the test will not continue until the faulty RAM is repaired. If the video RAMs are functioning properly, the screen displays:

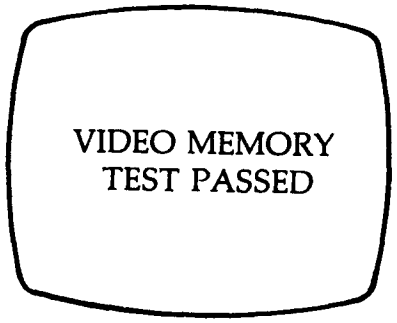

c) Input Test — The next sequence tests for errors in the input circuitry. The screen display is on the next page. INT in the upper left corner of the screen tests the interrupt circuits to the CPU. To be working properly, random characters should be displayed very rapidly to the right of INT. This shows the interrupt circuits are functioning properly. If the space to the right of INT remains blank, the CPU is not being interrupted properly. Dip Switch settings are displayed to verify the options selection. 1PSTART and 2PSTART will not be displayed on the screen initially. Depress the 1-player and 2-player buttons alternately and they should appear on the screen. If not, then there is a problem in the circuitry associated with the 1 and 2 player buttons. The bottom of the screen displays Player Controls. To be functioning correctly, they should all display OFF, then as each switch is depressed, display ON.

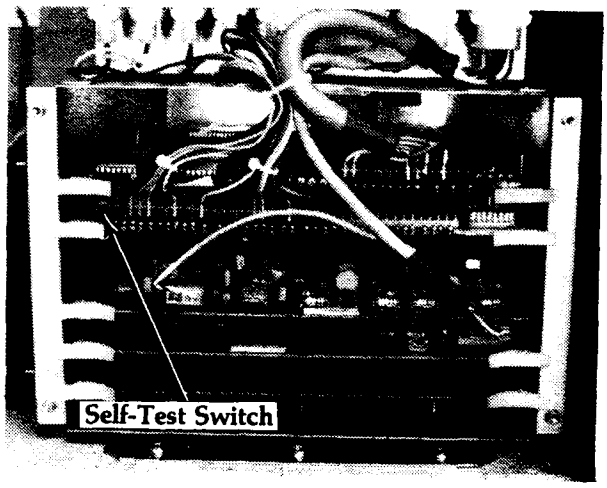

INPUT TEST

INT	DIP SWITCHES							
	8	7	6	5	4	3	2	1
1	0	0	0	0	0	0	0	0
2	C	C	C	C	C	C	C	C

1PSTART 2PSTART

PLAYER CONTROLS

P1 LEFT	OFF
P1 RIGHT	OFF
P1 FIRE	OFF
P1 WARP	OFF

d) Coin Test — This test checks the timing of the coin switch. Refer to illustration below. To activate this test, insert coins into both coin mechs alternately. Coin mech 1 will appear on the screen as A and coin mech 2 will be displayed as B. Any letter appearing within the good area indicates the coin switches are timed properly. The closer the letter comes to either line, though, the more out of adjustment the coin switches are. Adjust a faulty coin switch by bending the trip wire up or down, slightly. To proceed to the next test, the 1-player button must be depressed.

COIN TEST

BAD	GOOD	BAD
	A A B B	

e) Eprom Test — This test checks PROMs in the entire system. Note the display above. The part number for each Eprom is displayed and whether that PROM is good or bad. This is a fast test and will not remain on the screen long if none of the PROMs are bad.

EPROM TEST

0813	GOOD
0814	GOOD
0815	GOOD
0816	GOOD
0817	GOOD
0818	GOOD
0819	GOOD
0820	GOOD
0821	GOOD
0822	GOOD
0823	GOOD
0824	GOOD
0825	GOOD
0826	GOOD
0827	GOOD
0828	GOOD
****	NONE
****	NONE
****	NONE

f) Screen Test — This test is a color test. A solid black box divided into 4 quadrants should appear on the screen. The upper left quarter displays eight shades of green. The upper right displays eight red shades and the lower left displays four blue. The lower right quarter should remain black. The shades of color are displayed as bars in each quarter. One of each shade is OFF or will appear to be black. This test must be terminated by depressing the 1-player button.

g) Sound Test — The final phase displays each type of sound on the screen accompanied by the actual audio sound. It starts with the display, ALL SOUNDS OFF, and continues through seventeen different sounds. The final sequence is VOICE. The test runs through the entire Astro Blaster vocabulary.

At the conclusion of the sound test, the game returns to the advertising sequence and the test is completed.

game adjustments

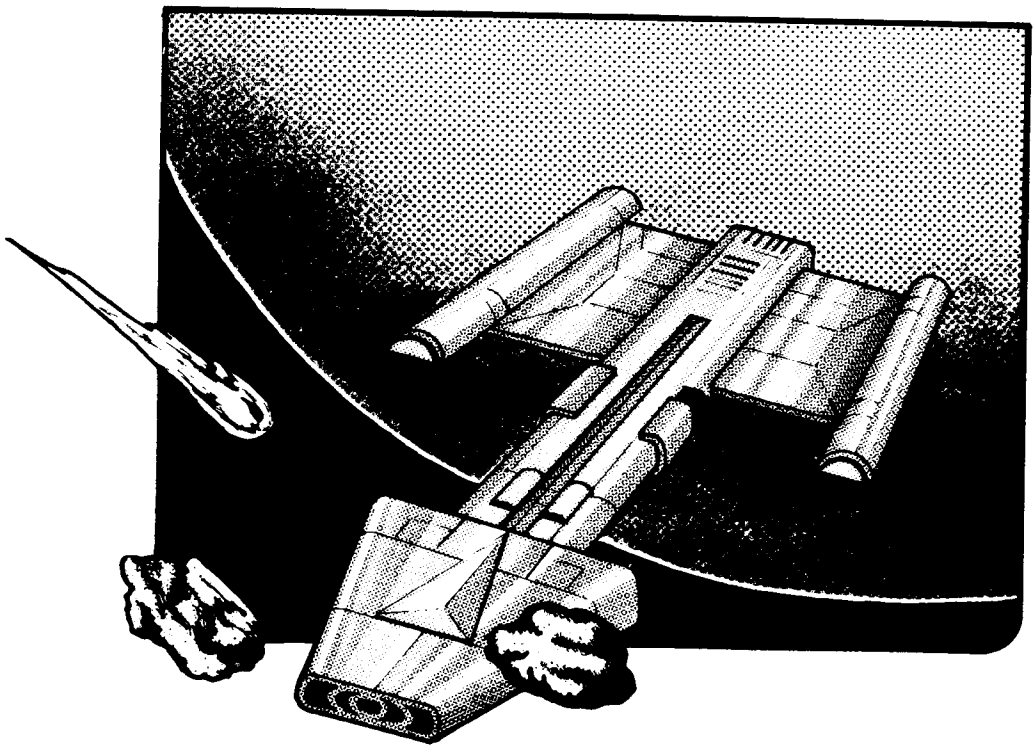

1. Operator Panel

The operator panel is located on the inside of the coin door behind the coin mechanism. It contains the volume control for adjusting sound, a service switch for giving credits without increasing the coin counter and a reset switch for resetting the game.

2. Options Selection

The following charts define the game and coin/credit options available on the Astro Blaster game. These options are controlled by 2 sets of switches (DIP) located in the upper left hand corner of the G-80 CPU card. Switch #1 is positioned close to the edge of the board; switch #2 is recessed.

ASTRO BLASTER GAME OPTIONS — Switch #1

Game Option	8	7	6	5	4	3	2	1
Upright - 5 ships	O	O	O	X	X	X	X	X
Upright - 4 ships	C	O	O	X	X	X	X	X
Upright - 3 ships	O	C	O	X	X	X	X	X
Upright - 2 ships	C	C	O	X	X	X	X	X
Cocktail - 5 ships	O	O	C	X	X	X	X	X
Cocktail - 4 ships	C	O	C	X	X	X	X	X
Cocktail - 3 ships	O	C	C	X	X	X	X	X
Cocktail - 2 ships	C	C	C	X	X	X	X	X

COIN/CREDIT OPTIONS — Switch #2

Coin/Credit	8	7	6	5	4	3	2	1
4 coin/1 credit	C	C	C	C	C	C	C	C
3 coin/1 credit	O	C	C	C	O	C	C	C
2 coin/1 credit	C	O	C	C	C	O	C	C
1 coin/1 credit	O	O	C	C	O	O	C	C
1 coin/2 credit	C	C	O	C	C	C	O	C
1 coin/3 credit	O	C	O	C	O	C	O	C
1 coin/4 credit	C	O	O	C	C	O	O	C
1 coin/5 credit	O	O	O	C	O	O	O	C
1 coin/6 credit	C	C	C	O	C	C	C	O
2 coin/1 credit 4 coin/2 credit 5 coin/3 credit	O	C	C	O	O	C	C	O

COIN/CREDIT OPTIONS — Switch #2

Coin/Credit	8	7	6	5	4	3	2	1
2 coin/1 credit 4 coin/3 credit	C	O	C	O	C	O	C	O
1 coin/1 credit 2 coin/2 credit 3 coin/3 credit 4 coin/4 credit 5 coin/6 credit	O	O	C	O	O	O	C	O
1 coin/1 credit 2 coin/2 credit 3 coin/3 credit 4 coin/5 credit	C	C	O	O	C	C	O	O
1 coin/1 credit 2 coin/3 credit	O	C	O	O	O	C	O	O
1 coin/2 credit 2 coin/4 credit 3 coin/6 credit 4 coin/8 credit 5 coin/11 credit	C	O	O	O	C	O	O	O
1 coin/2 credit 2 coin/4 credit 3 coin/6 credit 4 coin/9 credit	O	O	O	O	O	O	O	O

X = Don't Care O = Open C = Closed

parts catalog

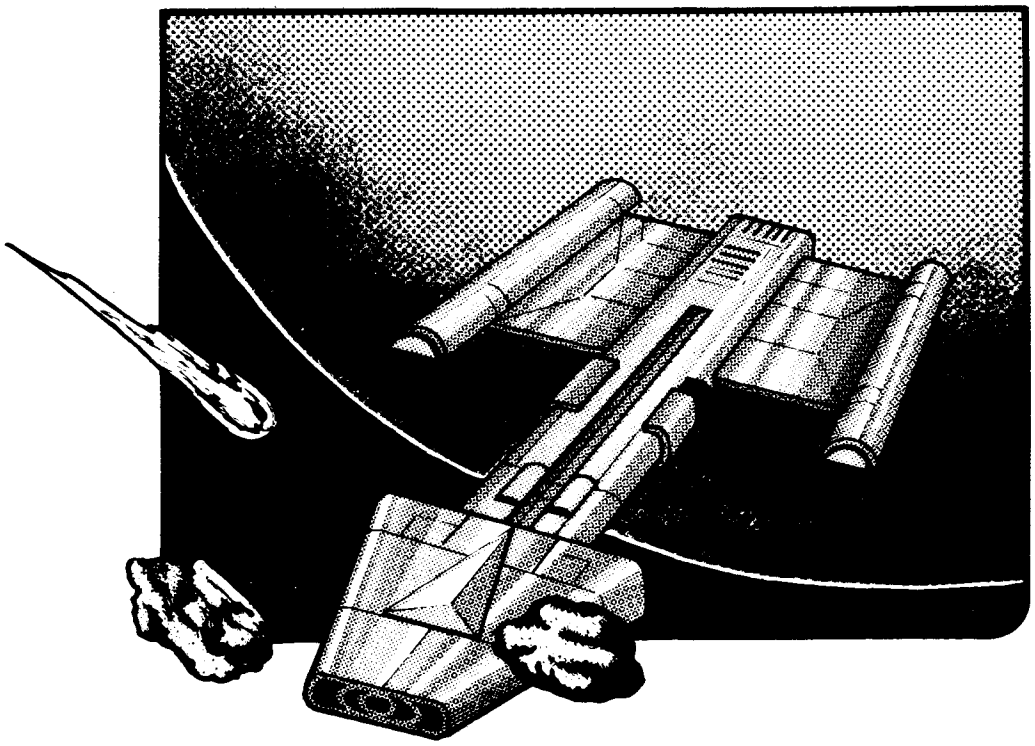

* Indicates Recommended Spare Parts — Stock "Quantity Per Assembly" To Support 5 Games.

top assembly upright

PARTS LIST			DWG NO. 700-0045
Item #	Gremlin Part #	Qty Per Assembly	Description
1	250-0458	1	SADDLE, G-80 CAGE
2	800-0145	1	ASSY J-BOX
3	140-0021	1	COVER J-BOX
4	140-0049	1	BASIC CABINET WOODGRAIN
*5	420-0558	1	GRAPHIC INTERIOR
*6	130-0002	1	SPEAKER COVER 6×9
7	250-0032	1	FRONT BEZEL
*8	250-0034	1	SPRING RETAINER
9	250-0038	1	MOLDING STRIP
10	250-0048	1	CLIP SWITCH
11	250-0356	2	BRACKET CLR MONITOR SUPPORT
*12	253-0104	1	PANEL MONITOR
*13	253-0204	1	PANEL LOGO
14	280-0005	15	CABLE TIE
15	280-0327	15	BASE TIE WRAP
16	390-0019	1	LAMP, FLUORESCENT
*17	420-0552	1	MANUAL ASTRO BLASTER
18	800-0147	1	ASSY FLUOR LAMP 2
*19	800-0140	1	ASSY COLOR MONITOR 19"
20	420-0028	1	DECAL S/N
21	420-0030	1	DECAL CAUTION 115V
22	420-0040	1	DECAL RECYCLE
23	420-0041	1	DECAL S/N SMALL
24	420-0507	1	LIGHT BAFFLE
25	420-0526	1	MANUAL ELECTROHOME MONITOR
26	800-3139	1	ASSY GAME ELECTRONICS A/B
*27	800-0176	1	ASSY CONTROL PANEL COMPLETE
28	800-0190	1	ASSY XFMR EMI
29			
30	320-0020	3"	SEALANT FOAM
31	280-0004	2	CLIP WIRE HOLDDOWN
32	800-0191	1	ASSY GAME PWR SUPPLY
*33	800-0193	1	ASSY COIN DOOR
34	800-0194	1	ASSY CASH CONTAINER
35	800-0192	1	ASSY SPEAKER HARN
36	800-0178	1	ASSY HARN POWER
37	800-0196	1	ASSY HARN VIDEO INTERFACE
*38	130-0001	1	SPEAKER GAME 6×9
39	800-0197	1	ASSY OPERATOR PANEL
40	800-0195	1	ASSY CONTROL PANEL INTERFACE HARN
41	800-0202	1	ASSY AC HARN
42	800-0204	1	ASSY GND HARN G-80
43		4	SCR MACH PHIL 8-32×2"

Top Assembly Upright
700-0045

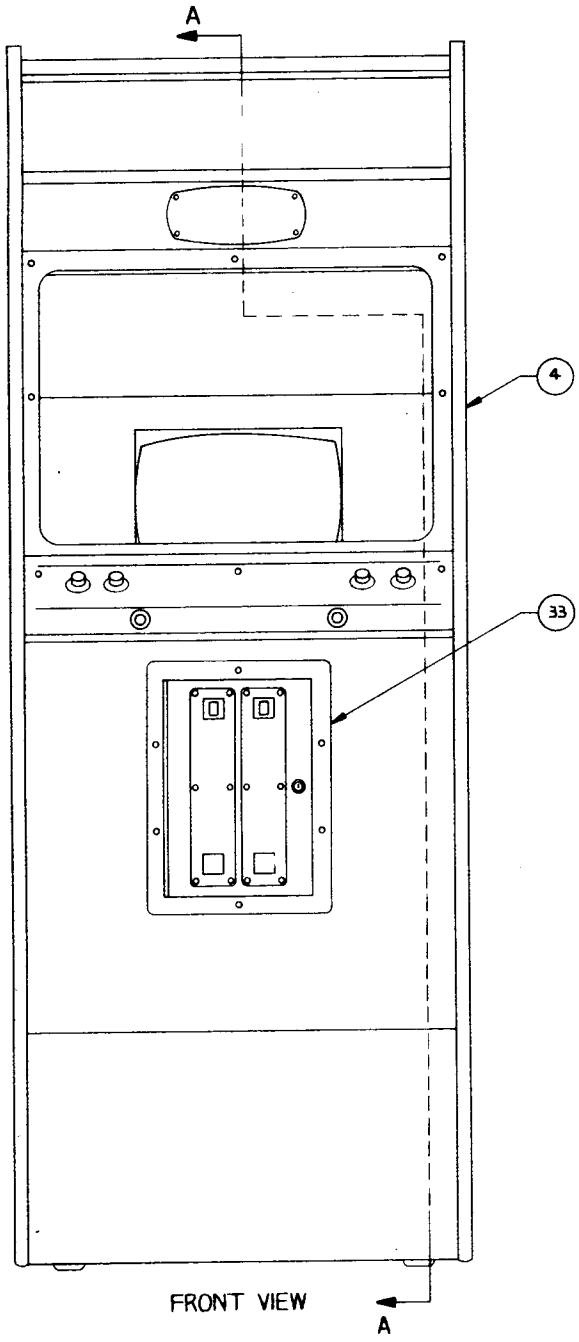

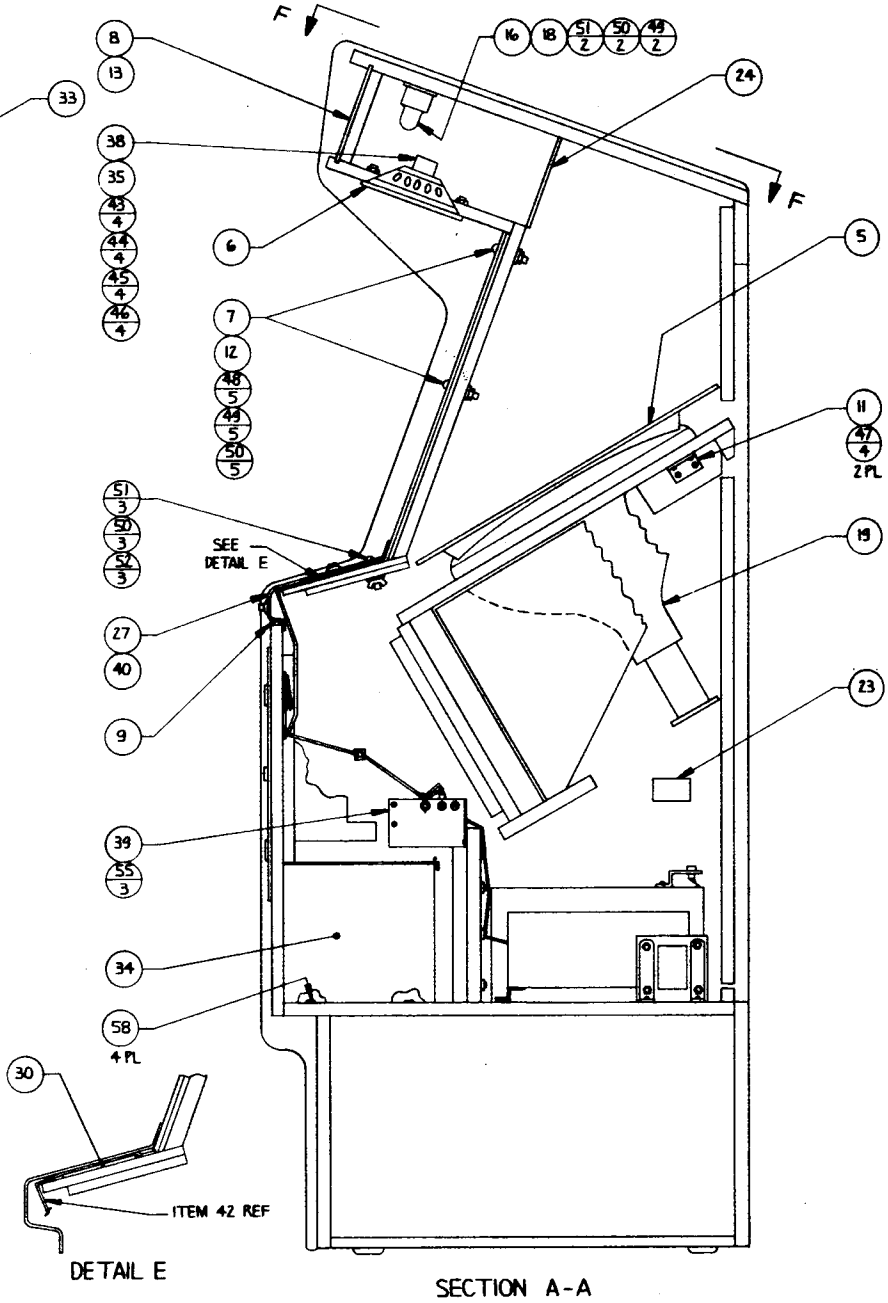

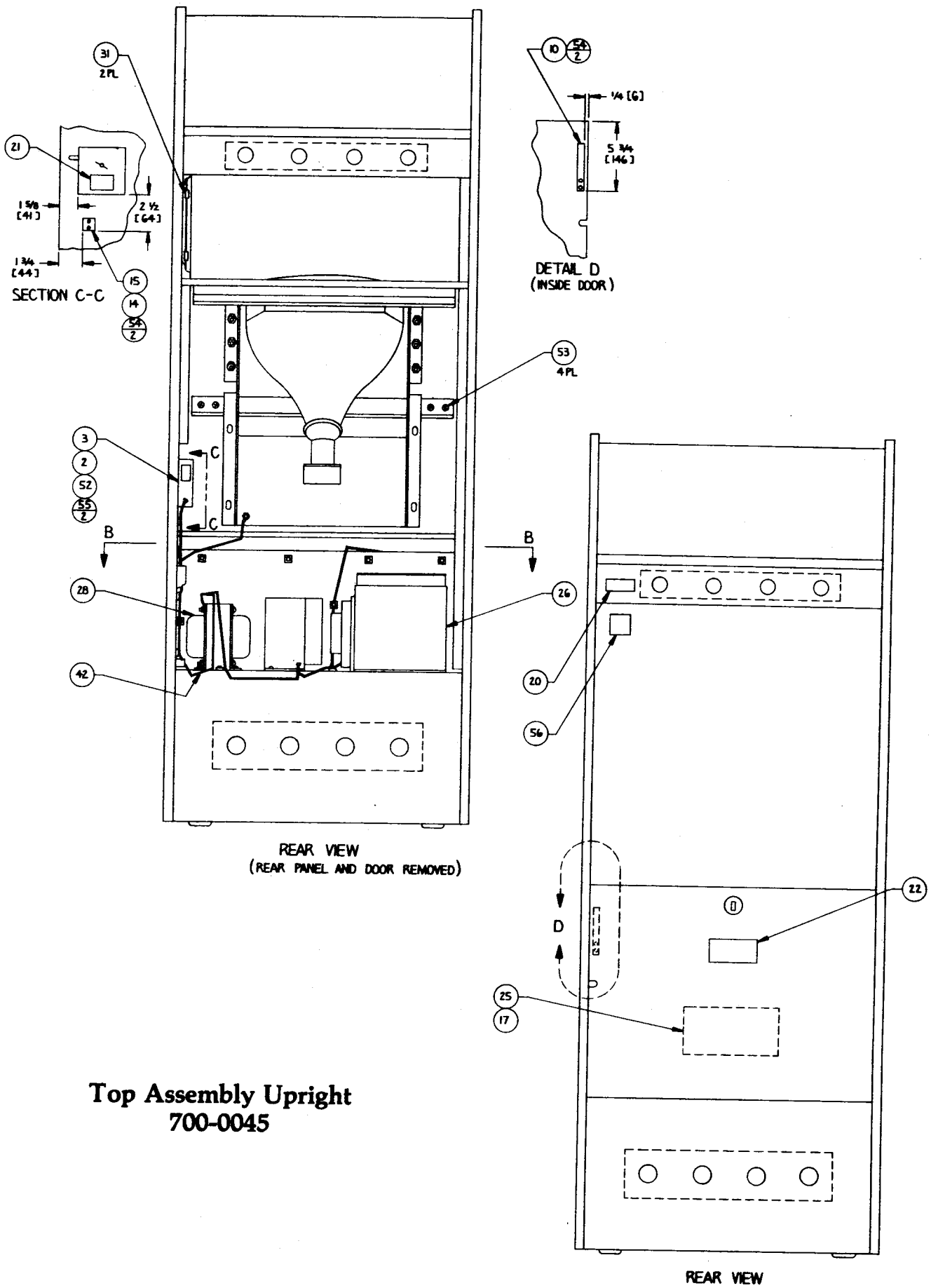

Top Assembly Upright
700-0045

PARTS LIST			DWG No. 700-0045
Item #	Gremlin Part #	Qty. Per Assembly	Description
44		4	NUT HEX 8-32
45		4	WASHER FLAT #8
46		4	WASHER LOCK SPLIT #8
47		8	SCR PHIL RD HD #8×½" SHT MTL
48		5	BOLT CARRIAGE #10-24×2"
49		7	NUT HEX #10-24
50		10	WASHER FLAT #10, ¾" OD
51		5	BOLT CARRIAGE #10-24×1¼"
52		4	NUT WING #10-24
53		6	SCR PHIL PN HD #8×1¼" SHT MTL
54		4	SCR PHIL PN HD #6×½" SHT MTL
55		5	SCR PHIL PN HD #10×½" SHT MTL
56	420-0568	1	DECAL FCC
57		13	SCR PHIL PN HD #10×¾" SHT MTL
58		4	SCR FL HD #10×½" SHT MTL
59	250-0469	1	SADDLE G-80 PWR SUPPLY

assembly control panel

PARTS LIST			DWG NO. 800-0176
Item #	Gremlin Part #	Qty Per Assembly	Description
* 1	240-0006	1	BUTTON PLUNGER RED
* 2	240-0008	3	BUTTON PLUNGER WHT
* 3	240-0009	2	BUTTON PLUNGER YEL
4			
5	250-0367	1	SUBPANEL METAL
6	253-0031	1	SPACER, WICO SWITCH
* 7	253-0205	1	GRAPHIC CONTROL PANEL
8	280-0005	4	CABLE TIE
9	280-0327	4	BASE TIE WRAP
10	280-0329	6	NUT HEX PAL ½-13
* 11	510-0023	6	ASSY SWITCH WICO
12	800-3141	1	ASSY HARN CONTROL PANEL

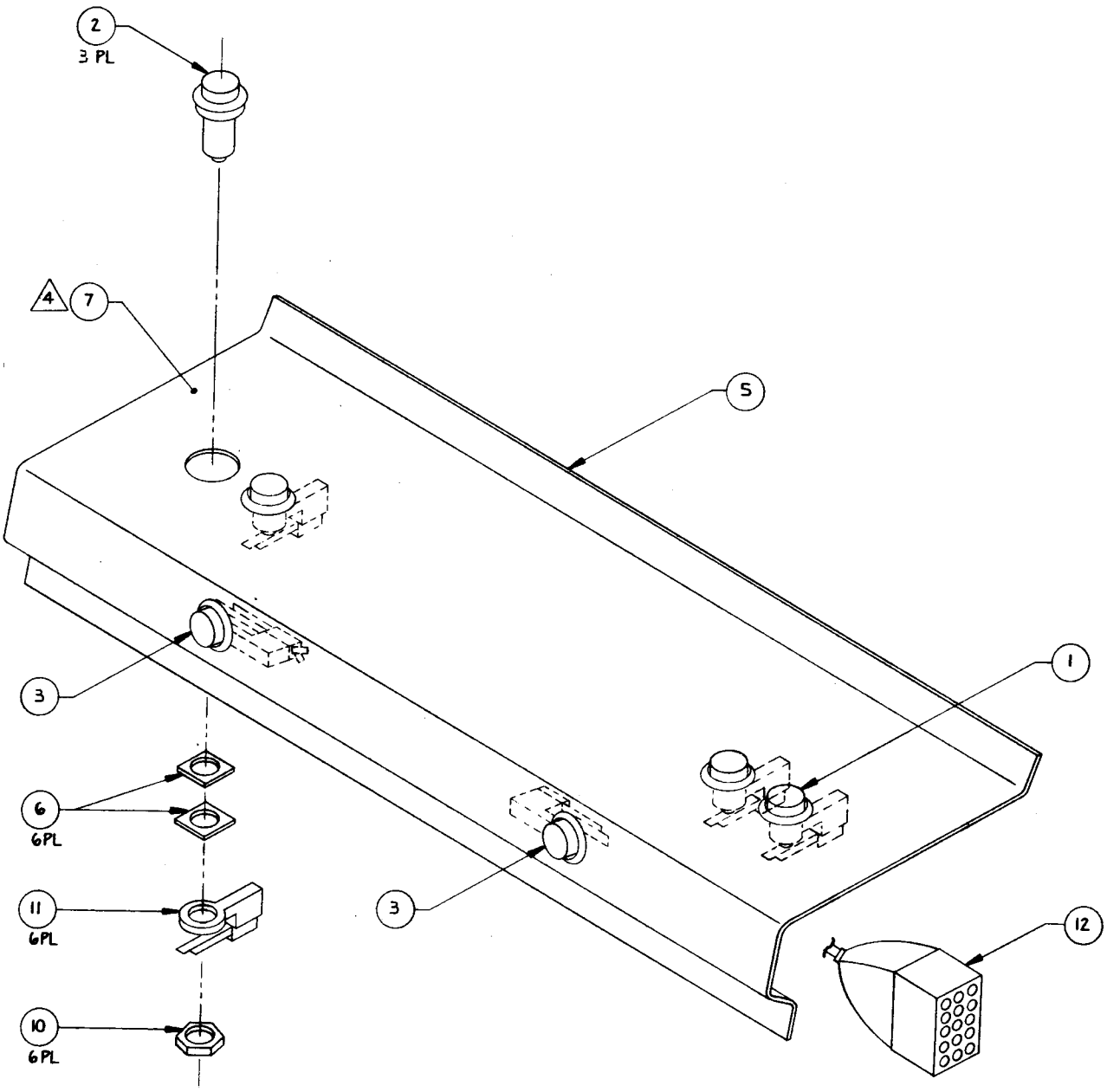

Assembly Control Panel
800-0176

PARTS LIST			DWG NO. 800-0197
Item #	Gremlin Part #	Qty Per Assembly	Description
1	211-0005	2	CONN CRIMP
2	211-0042	11	CONN SOCKET AMP
3	211-0043	1	CONN PLUG AMP 2 PIN
4	211-0045	1	CONN PLUG AMP 6 PIN
5	211-0059	1	CONN PLUG AMP 3 PIN
6	211-0073	1	CONN PLUG AMP 4 PIN
7	212-0005	1	CONN FEM BLK 4 PIN
8	220-0008	1	COUNTER DIGITAL
9	240-0001	1	KNOB VOL CONTROL
10	250-0459	1	BRKT OPERATOR CONTROL
11	280-0005	12	CABLE TIE
12	280-0117	1	TAB RIVET
13	420-0561	1	DECAL OPERATOR PANEL
14	475-0007	1	POT 10K CAR PNLMT
15	510-0051	2	SW PUSHBUTTON SLIDE
16	600-0013	5FT	CA 1 COND SHLD
17	471-0031	1	RES 330 OHM ½W 5%
18			
19			
20			
21		4	SCREW PHIL PAN 6-32×3/8 MACH
22		4	WASHER FLAT #6
23		4	WASHER LOCK #6
24		4	NUT HEX 6-32
25		4	RIVET POP AL 1/8

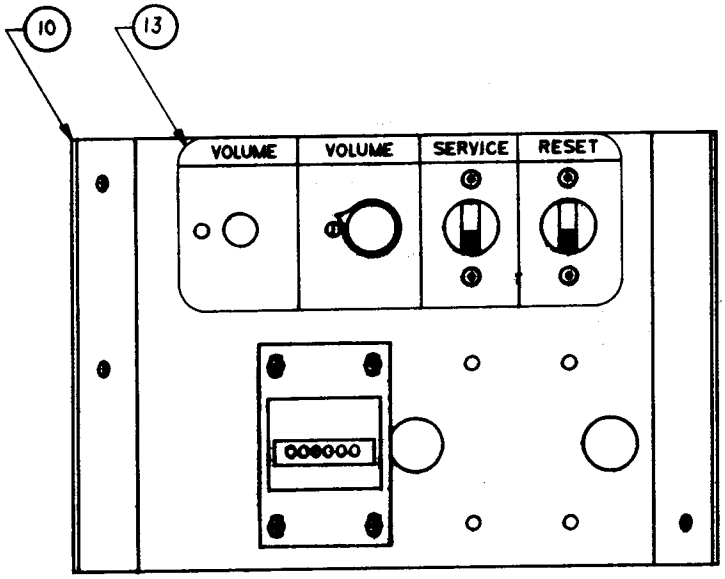

Assembly Operator Panel
800-0197

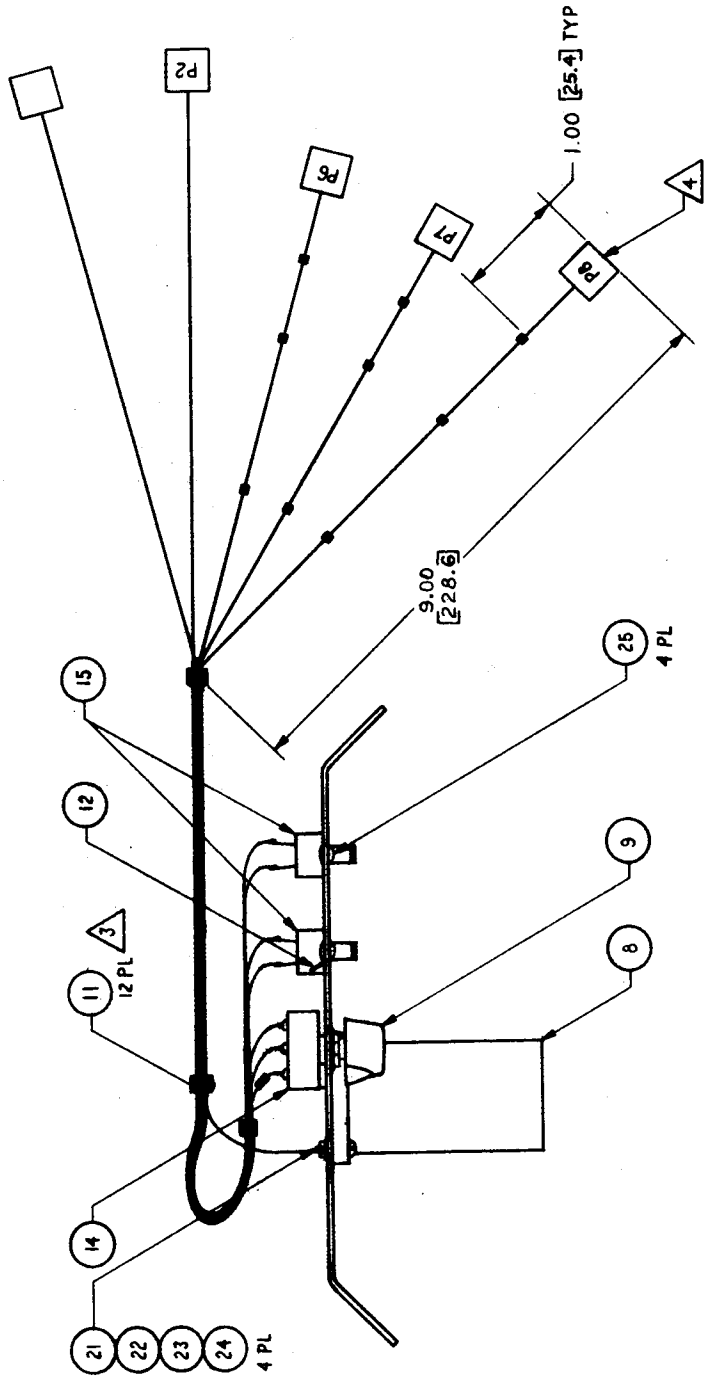

Assembly Operator Panel
800-0197

PARTS LIST			DWG NO. 800-0193
Item #	Gremlin Part #	Qty Per Assembly	Description
* 1	220-0035	1	LOCK FORT LOCK
* 2	220-0160	2	COIN MECH
3	250-0470	1	FRAME COIN DOOR
4	280-0005	4	CABLE TIE
5	280-0327	4	BASE TIE WRAP
6	800-0174	1	ASSY HARN COIN MECH
7			
8			
9			
10			
11		12	BOLT CARRAGE 10 - 24 × ½BLK
12		12	WASHER FLAT #10
13		12	WASHER LOCK SPLIT #10
14		12	NUT HEX 10-24

Assembly Coin Door
800-0193

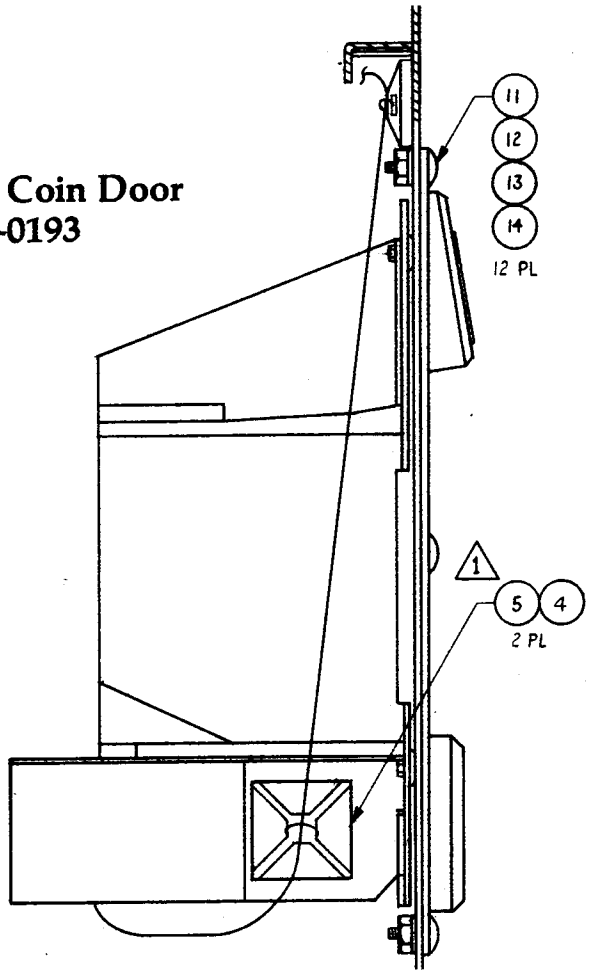

Assembly Coin Door
800-0193

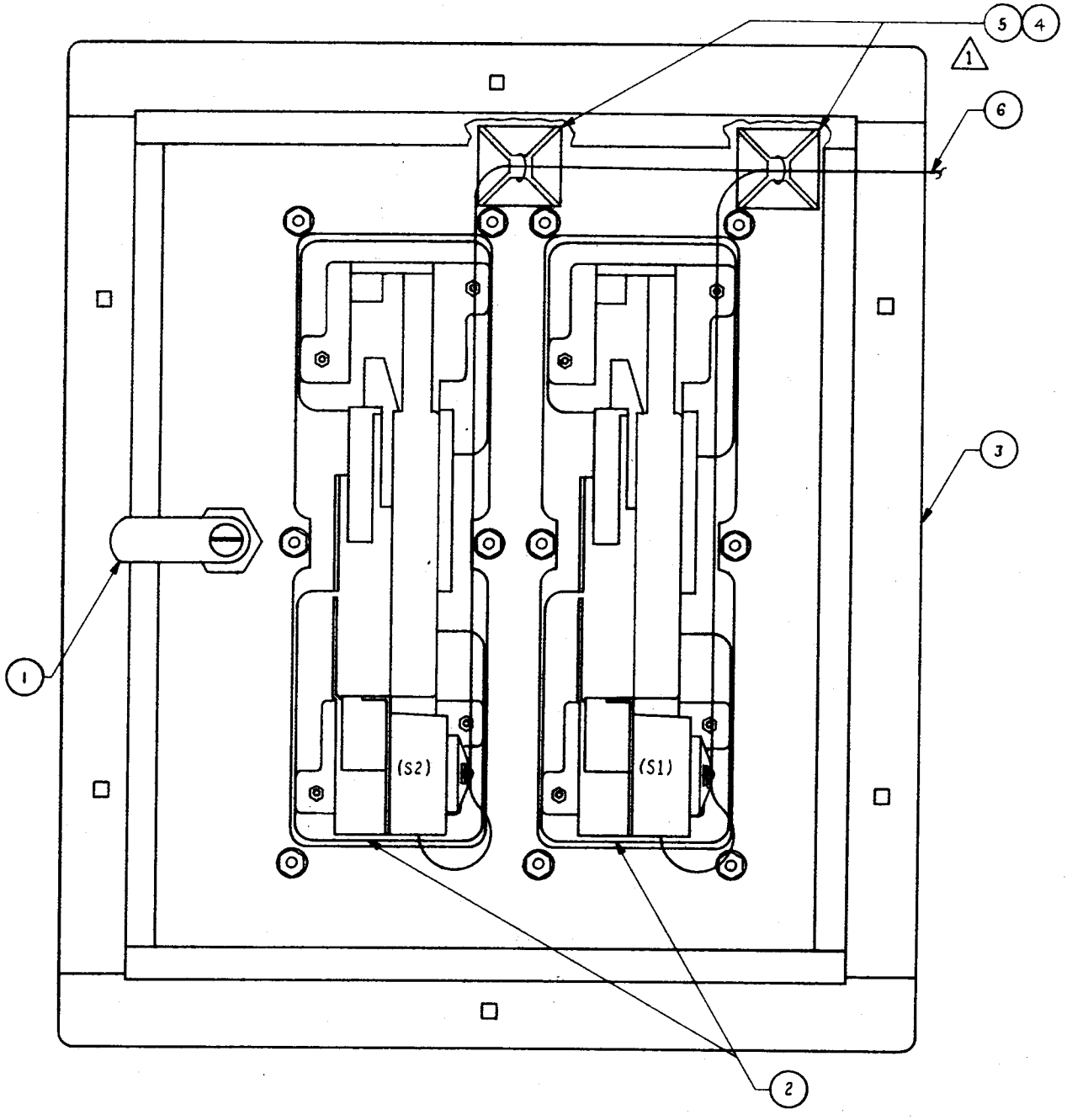

PARTS LIST				DWG NO. 800-3122
Item #	Gremlin Part #	Qty Per Assembly	Description	Ref Des
1	170-0210	1	P.C. BOARD	
2	212-0081	1	CONN 4 PIN M RTG	P1
3	482-0006	7	XSTR 2N4403	Q1-3, 7-10
4	482-0023	3	XSTR 2N4093	Q4-6
* 5	313-0039	5	IC TL084CN	U1, 2, 7, 16, 22
6	314-0001	11	IC NE555	U4-6, 13, 17, 18, 20, 23, 24, 37, 38
7	314-0018	1	IC 74LS00	U34
8	314-0019	1	IC 74LS04	U36
9	314-0067	1	IC 74LS30	U35
10	314-0042	2	IC 7406	U30, 31
11	314-0043	2	IC 7407	U26, 29
* 12	314-0093	2	IC 74LS374	U32, 33
13	315-0006	2	IC CD 4017	U3, 15
14	315-0007	6	IC CD 4011A	U9-11, 21, 25, 27
*15	315-0035	1	IC MM5837	U8
*16	315-0052	4	IC CD4024	U12, 14, 19, 28
*17	481-0008	6	DIODE, ZENER IN5231	D1, 3-6, 10
18	481-0006	25	DIODE IN914/IN4148	D2, 7-9, 11-31
19	150-0087	6	CAP E 4.7uf 25V	C47, 58, 60, 61, 69, 80
20	150-0088	10	CAP E 10uf 25V	C6, 12, 15, 27, 33, 34, 43, 46, 56, 62
21	150-0089	1	CAP E 22uf 25V	C48
22	151-0001	24	CAP CER .05uf 50V	C4, 10, 11, 13, 14, 19, 28-30, 32, C49-52, 54, 55, 66, 67, 72-75, C79, 81
23	151-0008	3	CAP CER .001uf 50V	C42, 44, 45
24	152-0001	17	CAP FILM .1uf 100V	C3, 5, 7-9, 20, 39, 35, 37, 38, 53, C57, 63, 64, 70, 78, 82
25	152-0005	3	CAP FILM .0047uf 100V	C31, 68, 77
26	152-0010	4	CAP FILM .022 uf 100V	C18, 26, 71, 76
27	152-0017	3	CAP FILM .33uf 100V	C21, 22, 59
28	152-0039	10	CAP FILM .01uf 100V	C1, 2, 16, 17, 24, 25, 23, 40, 41, 65
29	152-0045	1	CAP FILM .0022 100V	C36

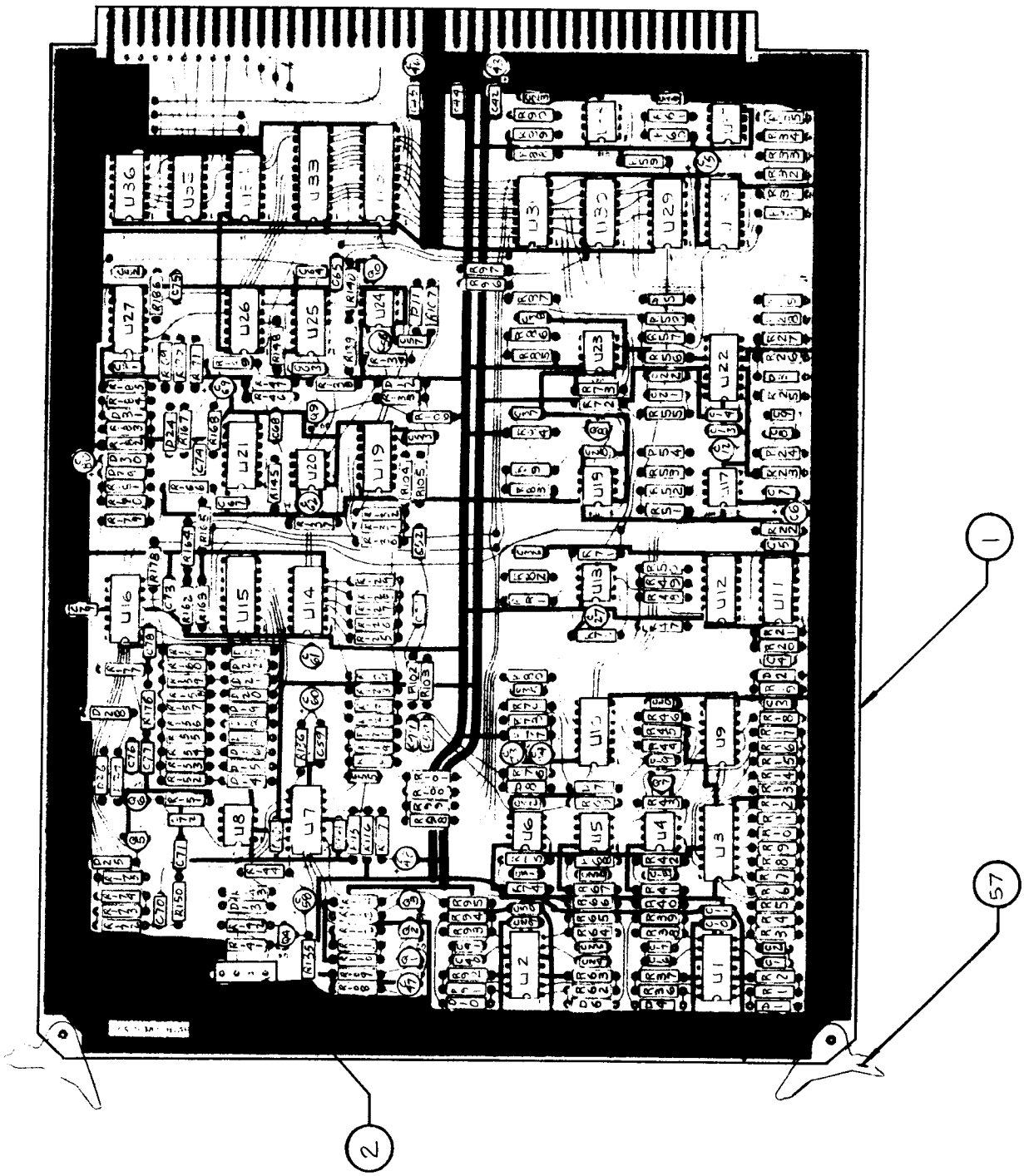

Assembly Sound Board
800-3122

PARTS LIST				DWG No. 800-3122
Item #	Gremlin Part #	Qty. Per Assembly	Description	Ref Des
30	471-0104	27	RES 100K OHM ½W 5%	R1, 10, 21, 23, 36, 42, 45, 59, 61, R62, 70, 73, 75, 82, 90, 91, 107, 108, R115, 124, 133, 146, 148, 149, R169, 171, 88
31	471-0105	14	RES 1M OHM ½W 5%	R20, 44, 80, 100, 101, 103, 142, R151, 165, 166, 168, 185, 98, 99
32	471-0124	1	RES 120K OHM ½W 5%	R161
33	471-0152	4	RES 1.5K OHM ½W 5%	R2, 37, 63, 92
34	471-0154	3	RES 150K OHM ½W 5%	R11, 79, 85
35	471-0183	1	RES 18K OHM ½W 5%	R8
36	471-0223	14	RES 22K OHM ½W 5%	R7, 28, 32, 50, 54, 76, 128, 130, R135, 141, 144, 178, 152, 143
37	471-0224	2	RES 220K OHM ½W 5%	R15, 120
38	471-0225	5	RES 2.2 M OHM ½W 5%	R24, 55, 138, 147, 170
39	471-0243	1	RES 24K OHM ½W 5%	R154
40	471-0273	1	RES 27K OHM ½W 5%	R157
41	471-0275	3	RES 2.7M OHM ½W 5%	R18, 106, 134
42	471-0333	6	RES 33K OHM ½W 5%	R9, 56, 57, 150, 158, 172
43	471-0334	6	RES 330K OHM ½W 5%	R3, 13, 38, 64, 77, 93
44	471-0393	6	RES 39K OHM ½W 5%	R33, 49, 126 131, 156, 12
45	471-0472	11	RES 4.7K OHM ½W 5%	R34, 35, 74, 97, 122, 137, 140, 145, R162, 184, 139
46	471-0473	11	RES 47K OHM ½W 5%	R14, 27, 153, 173-177, 179-181
47	471-0474	8	RES 470K OHM ½W 5%	R22, 43, 46, 69, 102, 116, 118, 119
48	471-0563	1	RES 56K OHM ½W 5%	R155
49	471-0623	1	RES 62K OHM ½W 5%	R159
50	471-0683	6	RES 68K OHM ½W 5%	R5, 6, 40, 52, 66, 95
51	471-0823	6	RES 82K OHM ½W 5%	R30, 48, 68, 125, 132, 160

PARTS LIST				DWG No. 800-3122
Item #	Gremlin Part #	Qty. Per Assembly	Description	Ref Des
52	471-0824	2	RES 820K OHM ½W 5%	R26, 58
53	471-0562	1	RES 5.6K OHM ½W 5%	R84
54	471-0102	8	RES 1K OHM ½W 5%	R19, 78, 83, 117, 123, 136, 167, 186
55	471-0103	36	RES 10K OHM ½W 5%	R4, 16, 17, 25, 29, 31, 39, 41, 47, R51, 53, 60, 65, 67, 71, 72, 81, R86, 87, 89, 94, 96, 104, 105, R109-113, 121, 127, 129, 163, R164, 182, 183
56	471-0101	1	RES 100 OHM ½W 5%	R114
57	280-0330	2	CARD EJECTOR	

PARTS LIST				DWG NO. 800-0107
Item #	Gremlin Part #	Qty Per Assembly	Description	Ref Des
1	150-0088	4	CAP E 10 uf 25V	C43, C45, C45, C62
2	151-0005	1	CAP CER 680pf 50V	C50
3	151-0012	1	CAP CER .1uf 50V	C47
4	151-0020	1	CAP CER 33pf 50V	C49
5	151-0060	19	CAP CER .1uf 16V AX	C37-C42, C44, C48, C51-C61
6	151-0061	36	CAP CER 220pf 16V AX	C1-C36
7	170-0194	1	PC BOARD	
8	211-0008	4	CONN PIN TEST PT	TP1-TP4
9	212-0098	4	CONN M 10 PIN RTA	
*10	230-0013	1	XTAL 8.000 MHZ	Y1
11	314-0001	1	IC NE555	U12
12	314-0015	1	IC 7404	U30
13	314-0018	4	IC 74LS00	U6, U8, U14, U19
14	314-0019	1	IC 74LS04	U18
15	314-0055	3	IC 74LS244	U34, U36, U38
16	314-0058	1	IC 74LS08	U13
17	314-0062	5	IC 74LS74	U10, U11, U17, U20, U39
18	314-0066	1	IC 74LS27	U16
19	314-0067	1	IC 74LS30	U37
20	314-0068	2	IC 74LS32	U32, U33
21	314-0078	1	IC 74LS02	U23
22	314-0083	1	IC 74LS240	U4
3	314-0085	2	IC 74LS14	U7, U31
24	314-0087	1	IC 74LS139	U24
25	314-0093	1	IC 74LS374	U3
*26	314-0099	1	IC 74LS245	U35
27	314-0105	4	IC 74LS253	U1, U2, U5, U9
*28	315-0041	1	IC Z80A	U22
*29	315-0046	4	IC 2114	U26-U29
*30	315-0050	1	IC 2516 (2716	U25
*31	316-0764	1	IC PROM 32×38	U15
32	390-0003	1	LED RED	D3
33	471-0101	1	RES 100 OHM ½W 5%	R5
34	471-0102	2	RES 1K OHM ½W 5%	R1, R3
35	471-0103	2	RES 10K OHM ½W 5%	R6, R9
36	471-0104	2	RES 100K OHM ½W 5%	R7, R8
37	471-0122	1	RES 1.2K OHM ½W 5%	R12
38	471-0220	1	RES 22 OHM ½W 5%	R14
39	471-0221	3	RES 220 OHM ½W 5%	R2, R4, R13

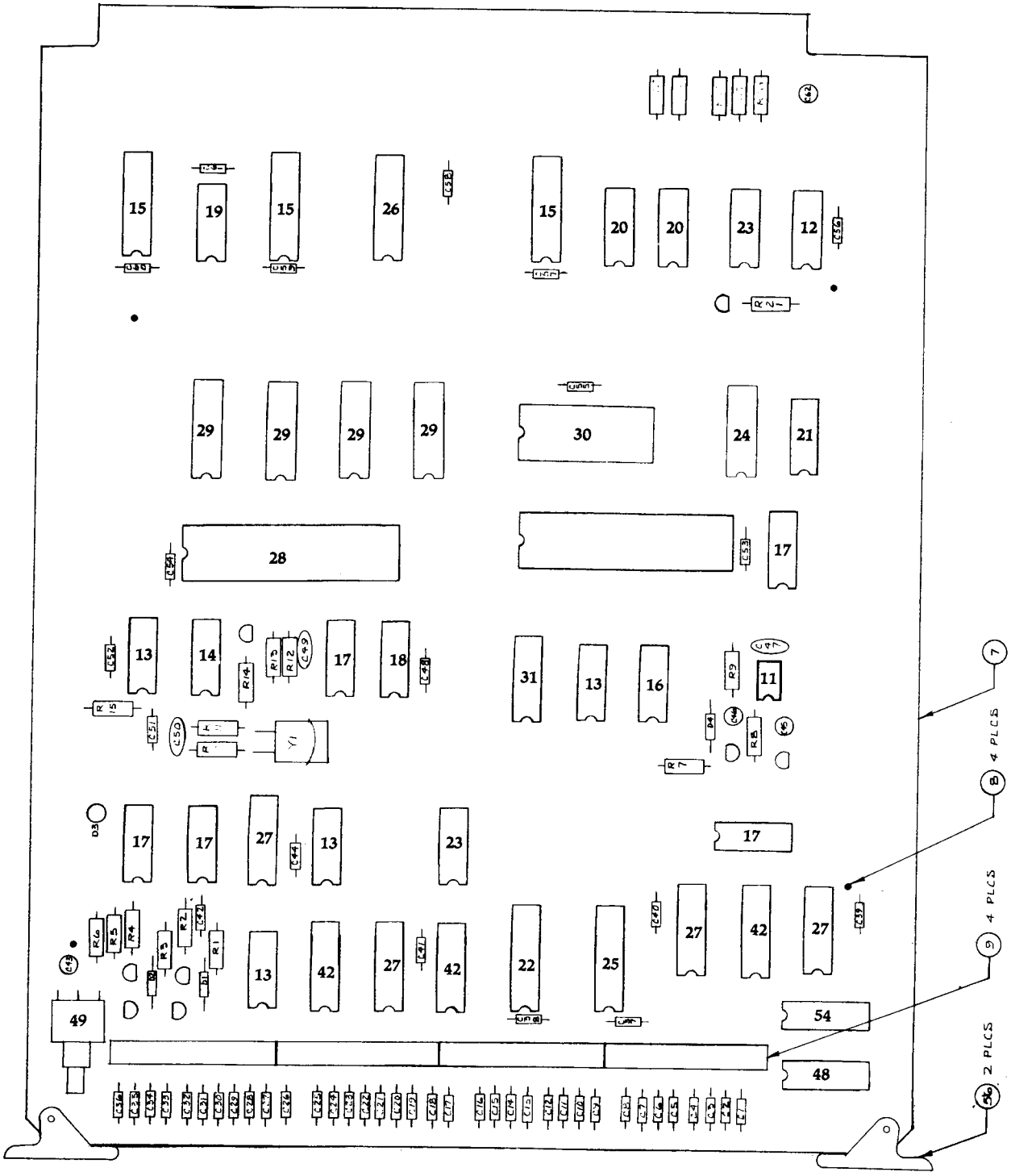

Assembly CPU Board
800-0107

PARTS LIST				DWG No. 800-0107
Item #	Gremlin Part #	Qty. Per Assembly	Description	Ref Des
40	471-0331	8	RES 330 OHM ½W 5%	R10, R11, R15-20
41	477-0002	3	RES PACK 15×2.2K	RP1-RP3
42	481-0001	2	DIODE IN4002	D1, D2
43	481-0006	1	DIODE IN914/IN4148	D4
44	482-0006	1	XSTR 2N4403	Q7
*45	482-0010	2	XSTR PE8050	Q1, Q2
46	482-0014	5	XSTR 2N4401	Q3-Q6, Q8
*47	510-0052	1	SWITCH PIANO DIP	SW1
*48	510-0053	1	SW PUSHBUTTON SIDE PCM	SW3
49	213-0001	1	SKT 24 PIN DUAL INLN	XU25
50	213-0002	4	SKT 18 PIN DUAL INLN	XU26-XU29
51	213-0004	1	SKT 16 PIN DUAL INLN	XU15
52	213-0005	2	SKT 40 PIN DUAL INLN	XU21, XU22
53	510-0049	1	SWITCH 8 POS DIP	SW2
54	471-0472	1	RES 4.7K OHM ½W 5%	R21
55	280-0330	2	CARD EJECTOR	

PARTS LIST				DWG NO. 800-0183
Item #	Gremlin Part #	Qty Per Assembly	Description	Ref Des
1	150-0087	1	CAP E 4.7 uf 25V	C2
2	150-0088	5	CAP E 10 uf 25V	C13, C46-C49
3	151-0021	2	CAP CER 20pf 50V	C6, C7
4	151-0056	1	CAP CER .047uf 50V	C10
5	151-0058	9	CAP CER .01uf 16V AX	C5, 11, 12, 14-17, 19, 20
6	151-0060	3	CAP CER .1 uf 16V AX	C9, C37, C38
7	170-0223	1	PC BOARD	
8	212-0012	1	CONN 6 PIN M	
* 9	230-0033	1	CRYSTAL 3.12 MHZ	Y1
*10	280-0330	2	CARD EJECTOR	
*11	313-0037	1	IC TL081 CP	U8
*12	313-0038	1	IC TL082 CP	U11
13	314-0058	1	IC 74LS08	U35
14	314-0062	1	IC 74LS74	U15
15	314-0067	1	IC 74LS30	U37
16	314-0072	1	IC 74LS174	U20
17	314-0085	1	IC 74LS14	U38
18	314-0087	1	IC 74LS139	U10
19	314-0100	1	IC 74LS273	U21
20	314-0042	1	IC 7406	U13
21	314-0131	1	IC 74LS373	U9
*22	315-0061	1	IC ST-32034	U2
*23	315-0077	1	IC 8035	U14
24	315-0079	1	IC CD 4053	U12
*25	316-0788	1	IC PROM SPEECH BD. DECODER	U30
26	471-0103	5	RES 10K OHM ½W 5%	R17, R21, R27-R29
27	471-0106	1	RES 10 MEG OHM ½W 5%	R3
28	471-0222	1	RES 2.2K OHM ½W 5%	R24
29	471-0223	4	RES 22K OHM ½W 5%	R13, R14, R18, R22
30	471-0254	1	RES 250K OHM ½W 5%	R19
31	471-0471	2	RES 470 OHM ½W 5%	R25, R26
32	477-0002	1	RES PACK 15×2.2K	RP2
33	471-0683	1	RES 68K OHM ½W 5%	R30
34	475-0022	1	POT 100K 10T PCMNT	R74
35	151-0009	1	CAP CER .003uf 100V	C50
36	471-0472	1	RES 4.7K OHM ½W 5%	R20
37	213-0001	5	SKT 24 PIN DUAL INLN	XU3-XU7
38	213-0004	1	SKT 16 PIN DUAL INLN	XU30

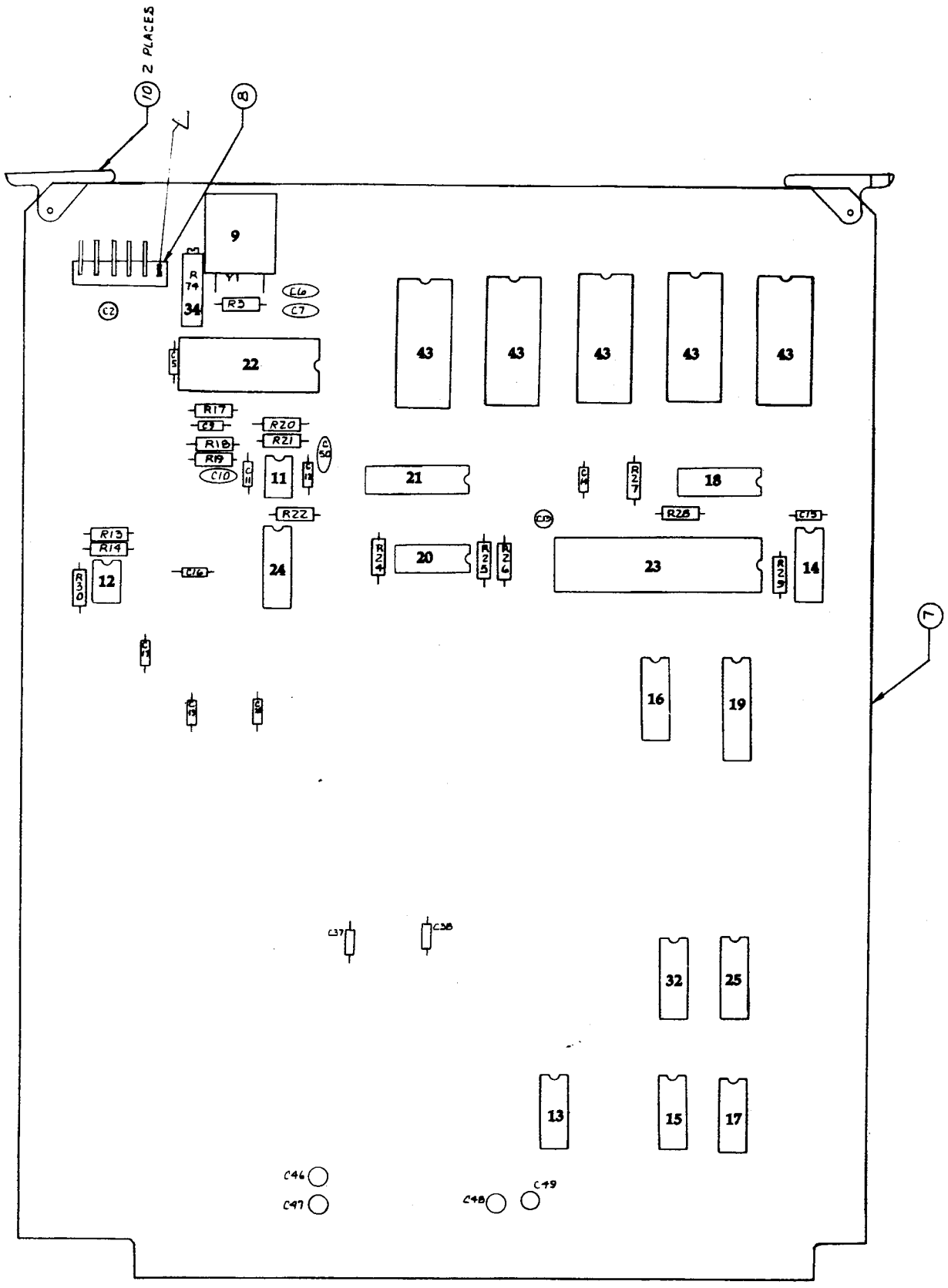

Assembly Speech Synthesis
800-0183

PARTS LIST				DWG No. 800-0183
Item #	Gremlin Part #	Qty. Per Assembly	Description	Ref Des
39	213-0005	1	SKT 40 PIN DUAL INLN	XU14
40	213-0008	2	SKT 20 PIN DUAL INLN	XU9, XU21
41	213-0010	2	SKT 8 PIN DUAL INLN	XU8, XU11
42	213-0012	1	SKT 28 PIN DUAL INLN	XU2
43	315-0050	5	IC 2716	

assembly G-80 2716 eprom board

PARTS LIST				DWG NO. 800-0151
Item #	Gremlin Part #	Qty Per Assembly	Description	Ref Des
1	151-0058	13	CAP CER .01uf 16V AX	C2, C4, C6, C8, C9, C11, C14, C16, C18, C21, C23, C25, C27
2	151-0060	15	CAP CER .1uf 16V AX	C1, C3, C5, C7, C10, C12, C13, C15, C17, C19, C20, C22, C24, C26, C28
3	170-0211	1	P C BOARD	
4	213-0001	23	SKT 24 PIN DUAL INLN	XUI-XU23
*5	314-0055	1	IC 74LS244	U25
6	314-0058	3	IC 74LS08	U26-U28
7	314-0059	1	IC 74LS10	U29
8	314-0104	1	IC 74LS138	U30
9	314-0120	1	IC 74LS154	U24
10	211-0008	3	CONN PIN TEST PT	TP1-TP3
11	150-0088	1	CAPE 10uf 25V	C29
12	280-0330	2	CARD EJECTOR	

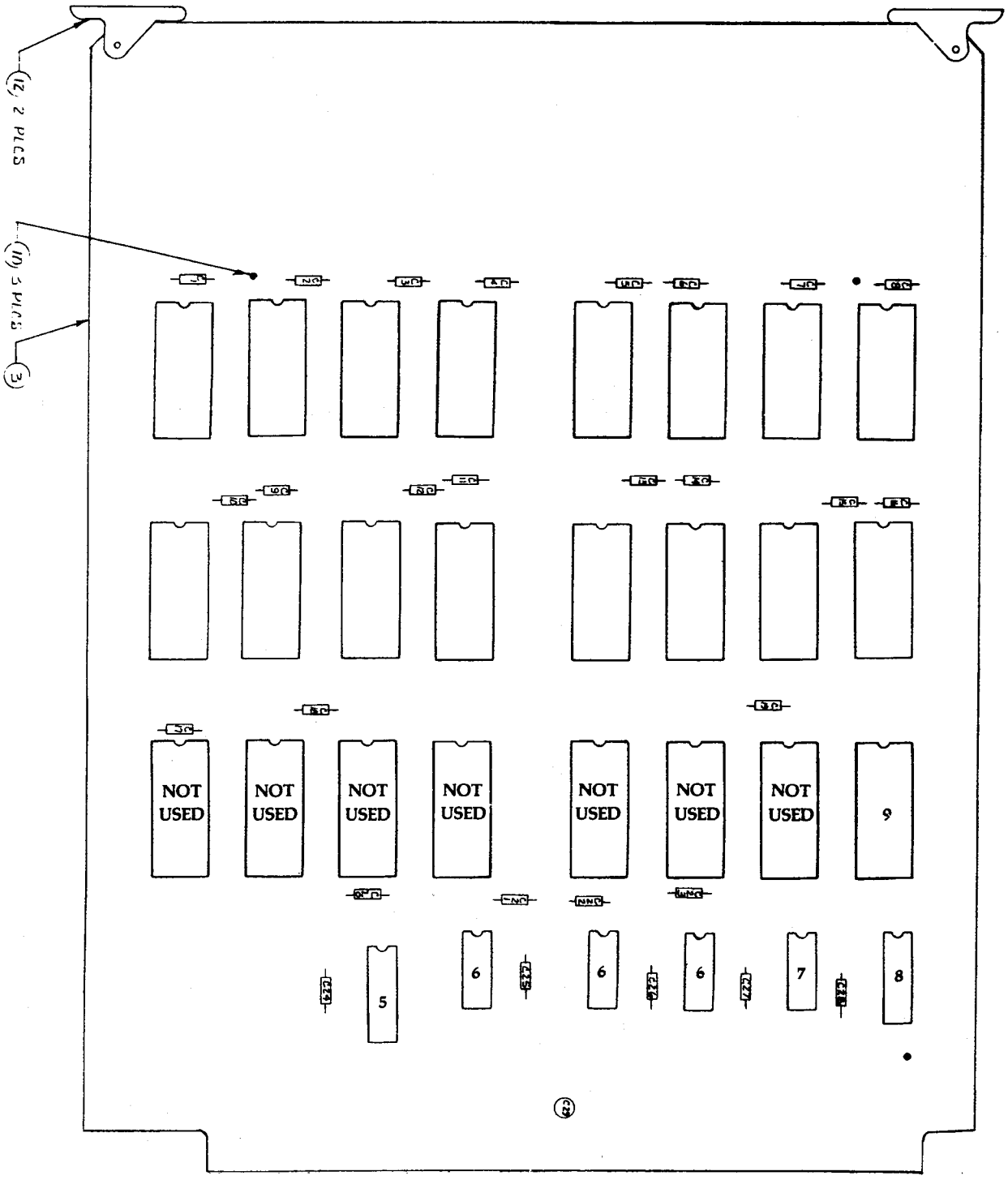

Assembly G-80 2716 EPROM Board
800-0151

PARTS LIST				DWG No. 800-0106
Item #	Gremlin Part #	Qty Per Assembly	Description	Ref Des
1	150-0088	3	CAPE 10uf 25V	C80-C82
2	151-0005	1	CAP CER 680 pf 50V	C79
3	151-0008	1	CAP CER .001 uf 50V	C65
4	151-0011	2	CAP CER .01 uf 50V	C54, C64
5	151-0058	7	CAP CER .01 uf 16V AX	C57, 60, 63, 70, 71, 84, 87
6	151-0060	61	CAP CER .1 uf 16V AX	C13-53, 56, 58, 59, 62, 66-69, 72-78, 83, 85, 86, 88, 89
7	151-0061	12	CAP CER 220 pf 16V AX	C1-C12
8	152-0007	2	CAP FILM .001 250V	C55, C61
9	170-0193	1	PC BOARD	
10	211-0008	3	CONN PIN TEST PT	TP1-TP3
*11	230-0009	1	XTAL 15.46848	Y1
12	212-0099	1	CONN 15 PIN M RTA	
*13	314-0001	2	IC NE555	U1, U10
14	314-0040	2	IC 74LS125	U32, U50
15	314-0046	1	IC 74LS04	U60
16	314-0058	2	IC 74LS08	U5, U44
17	314-0059	1	IC 74LS10	U41
18	314-0062	2	IC 74LS74	U6, U45
19	314-0067	1	IC 74LS30	U59
20	314-0068	1	IC 74LS32	U48
21	314-0070	4	IC 74LS86	U3, U4, U39, U40
22	314-0073	5	IC 74LS175	U42, U43, U49, U54, U55
23	314-0076	2	IC 74LS157	U56, U57
24	314-0077	4	IC 74LS166	U33-U36
25	314-0085	2	IC 74LS14	U37, U47
26	314-0086	1	IC 74LS163	U53
27	314-0087	1	IC 74LS139	U15
28	315-0039	16	IC 4015	U16-U31
*29	315-0042	1	IC CUSTOM CHIP	U58
*30	315-0065	1	IC 93419	U9
31	314-0093	1	IC 74LS374	U11
*32	314-0101	1	IC 74LS283	U38
33	314-0104	1	IC 74LS138	U51
34	314-0123	2	IC 74LS257	U13, U14
35	314-0124	2	IC 74LS33	U7, U8
36	314-0125	1	IC 74LS38	U46
*37	316-0806	1	IC 32×8 PROM	U52

PARTS LIST				DWG No. 800-0106
Item #	Gremlin Part #	Qty. Per Assembly	Description	Ref Des
38	471-0102	5	RES 1K OHM ½W 5%	R4-R6, R15, R16
39	471-0103	2	RES 10K OHM ½W 5%	R7, R17
40	471-0122	2	RES 1.2K OHM ½W 5%	R10, R13
41	471-0202	1	RES 2K OHM ½W 5%	R14
42	471-0222	3	RES 2.2K OHM ½W 5%	R21-R23
43	471-0242	2	RES 2.4K OHM ½W 5%	R9, R12
44	471-0330	2	RES 33 OHM ½W 5%	R19, R20
45	471-0331	2	RES 330 OHM ½W 5%	R24, R25
46	471-0472	2	RES 4.7K OHM ½W 5%	R8, R11
47	471-0563	1	RES 56K OHM ½W 5%	R18
48	481-0006	11	DIODE IN914/IN 4148	D1-D11-9
49	482-0006	1	XSTR 2N 4403	Q2
50	482-0014	1	XSTR 2N 4401	Q1
51	213-0004	17	SKT 16 PIN DUAL INLN	XU16-XU31, XU52
52	213-0005	1	SKT 40 PIN DUAL INLN	XU58
53	213-0012	2	SKT 28 PIN DUAL INLN	XU9, XU12
54	315-0067	1	HEADER 28 PIN	U12
55	477-0002	1	RES PACK 15×2.2K	RP1
56	471-0221	3	RES 220 OHM ½W 5%	R1-R3
57	280-0330	2	CARD EJECTOR	

assembly G-80 cage

PARTS LIST			
Item #	Gremlin Part #	Qty Per Assembly	Description
1	250-0456	1	assy. G-80 cage
2	250-0457	2	bracket, G-80 cage
3	800-0105	1	assy. 6 slot master board
4	800-0186	1	assy., fan G-80

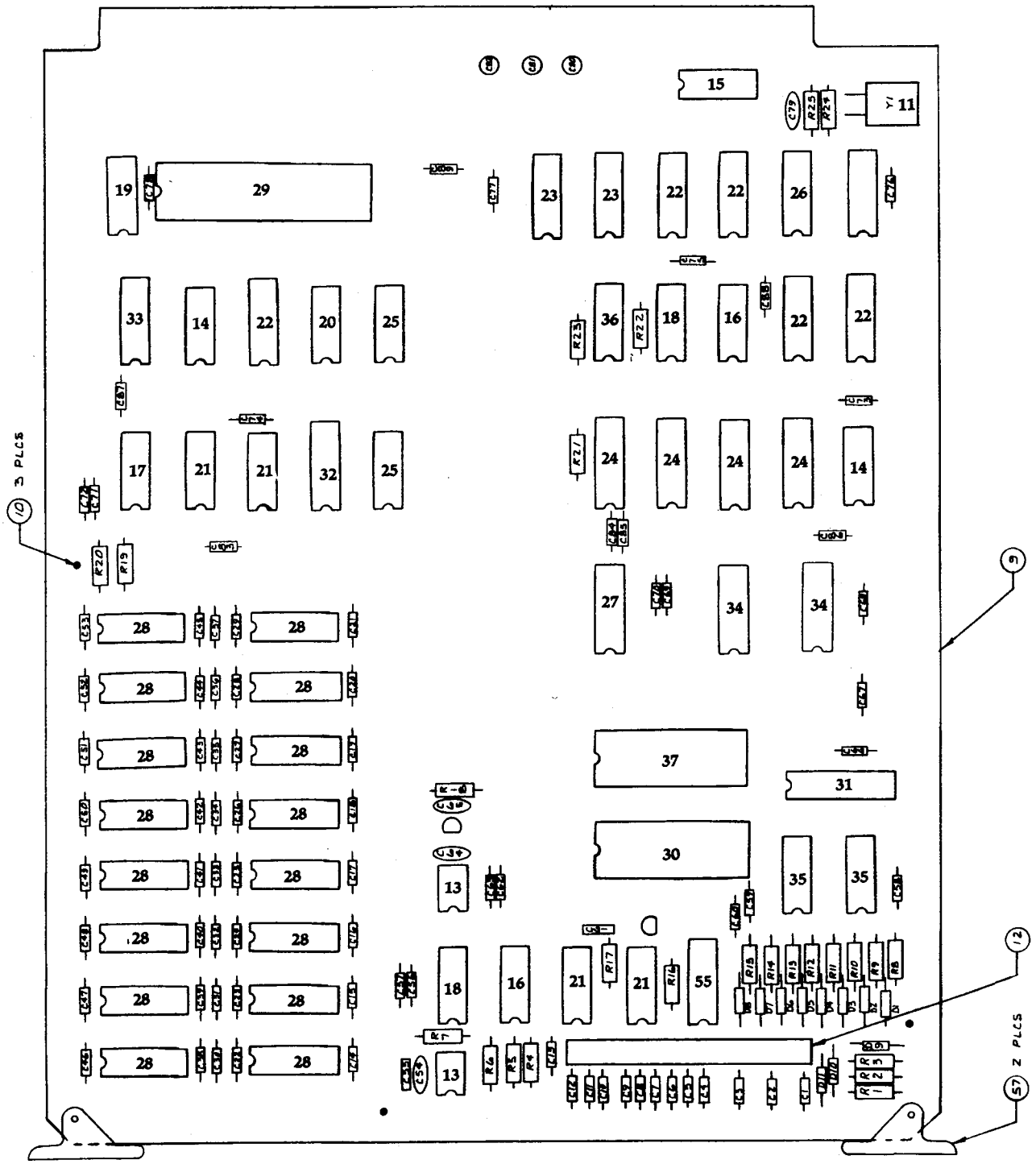

Assembly Video I Board
800-0106

P.C. assembly game power supply

PARTS LIST			DWG NO. 800-0128
Item #	Gremlin Part #	Description	Ref Des
1	150-0088	CAPE 10 uf 25V RDL	C2, C3, C7, C11, C13, C14
2	150-0092	CAPE 100 uf 25V RDL	C8, C9, C15, C26
3	150-0095	CAPE 3300 uf 16V RDL	C24
* 4	150-0096	CAPE 6800 uf 16V RDL	C25
* 5	150-0097	CAPE 4700 uf 25V RDL	C22, C23
6	151-0001	CAP CER .05 uf 50V	C1, C6, C20, C21
7	151-0002	CAP CER 100 pf 50V	C10, C16, C17
8	151-0007	CAP CER .005 uf 100V	C5
9	151-0008	CAP CER .001 uf 50V	C12, C18
10	151-0011	CAP CER .01 uf 50V	C4
11	151-0012	CAP CER .1 uf 50V	C19
12	170-0202	PC Board	
13	180-0008	CHOKE 1uH	L1
* 14	313-0001	IC LM 723 DIP	U1
* 15	313-0004	IC LM 741 EN DIP	U2, U3
* 16	313-0015	IC LM 320T-12	U5
* 17	313-0023	IC LM 320T-5	U4
18	471-0011	RES 10 OHM ½W 5%	R26
19	471-0101	RES 100 OHM ½W 5%	R2
20	471-0102	RES 1K OHM ½W 5%	R6, R7, R11, R15, R16, R21, R22
21	471-0103	RES 10K OHM ½W 5%	R8, R19
22	471-0122	RES 1.2K OHM ½W 5%	R3
23	471-0221	RES 220 OHM ½W 5%	R17, R18, R24, R25
24	471-0222	RES 2.2K OHM ½W 5%	R28
25	471-0272	RES 2.7K OHM ½W 5%	R30, R31
26	471-0332	RES 3.3K OHM ½W 5%	R4
27	471-0471	RES 470 OHM ½W 5%	R9
28	471-0472	RES 4.7K OHM ½W 5%	R1, R29
29	471-0473	RES 47K OHM ½W 5%	R10, R20, R27
* 30	473-00R1	RES .1 OHM 5W 3%	R32
* 31	473-00R2	RES .2 OHM 3W 5%	R12-R14
32	475-0004	POT 1K CAR PCMTV	R5, R23
33	481-0004	DIODE MR501	D1-D8
34	481-0008	DIODE IN5231	D9
* 35	481-0006	DIODE IN914/IN4148	D10, D11
* 36	482-0006	XSTR 2N4403	Q1, Q2, Q4
* 37	482-0014	XSTR 2N4401	Q3
* 38	482-0019	XSTR TIP 120	Q5, Q7
* 39	482-0100	XSTR TIP 125	Q6, Q8
* 40	514-0002	FUSE 3A NORM	F1, F3, F4

PARTS LIST			DWG NO. 800-0128
Item #	Gremlin Part #	Description	Ref Des
41	514-0003	CLIP FUSE MTG	F2
*42	514-0006	FUSE 1.5A NORM	
43	212-0004	CONN 4 PIN M	
44	212-0021	CONN 10 PIN M	

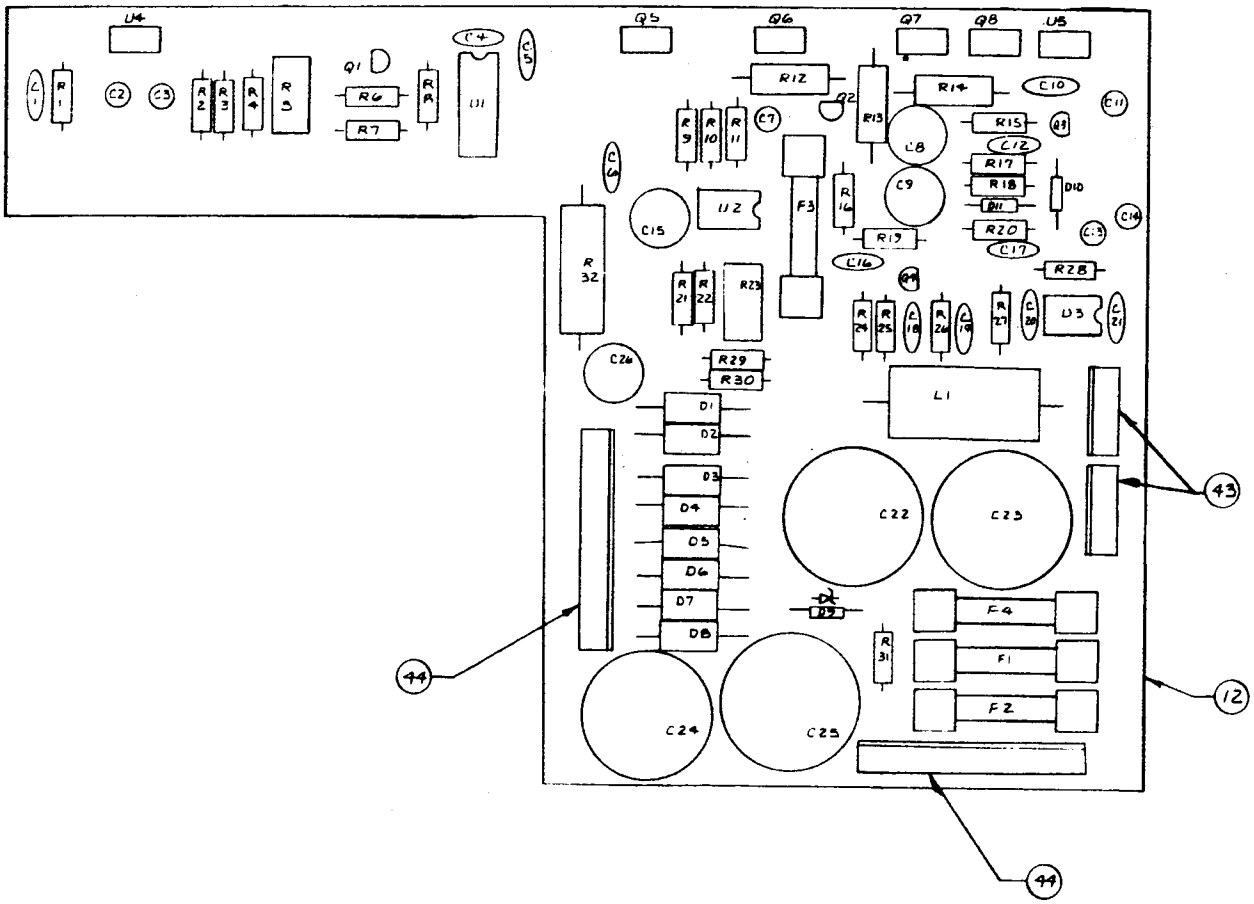

PC Assembly Game Power Supply
800-0128

PARTS LIST			DWG NO. 800-0146
ITEM #	Gremlin Part #	Qty Per Assembly	Description
1	211-0005	7	CONN CRIMP LOCK
2	211-0017	1	CONN FEM QUICK¼
3	211-0042	5	CONN SOCKET AMP
4	211-0059	1	CONN PLUG 3 PIN AMP
5	212-0016	1	CONN FEM 10 PIN
6	250-0433	1	HEAT SINK PWR SPLY ISOL
7	250-0434	1	CHASSIS PWR SPLY ISOL
8	280-0005	4	CABLE TIE
9	280-0014	6	STAND OFF CLIPS
10	280-0117	1	TAB, RIVET
*11	560-0054	1	XFMR ISOL
12	800-0128	1	P.C. ASSY GM PWR SPLY
13.		4	RIVET POP 3/16
14		8	SCR MACH PN HD #4-40×¼
15		6	SCR SHT METAL #6×½
16		4	WASHER FLAT#10
17		6	TRANSISTOR INSULATOR
18	211-0043	1	CONN PLUG 2 PIN AMP
19	280-0323	2	ELECTRIC TAP SPLICE
20	600-0079	6"	2 COND ZIP CORD

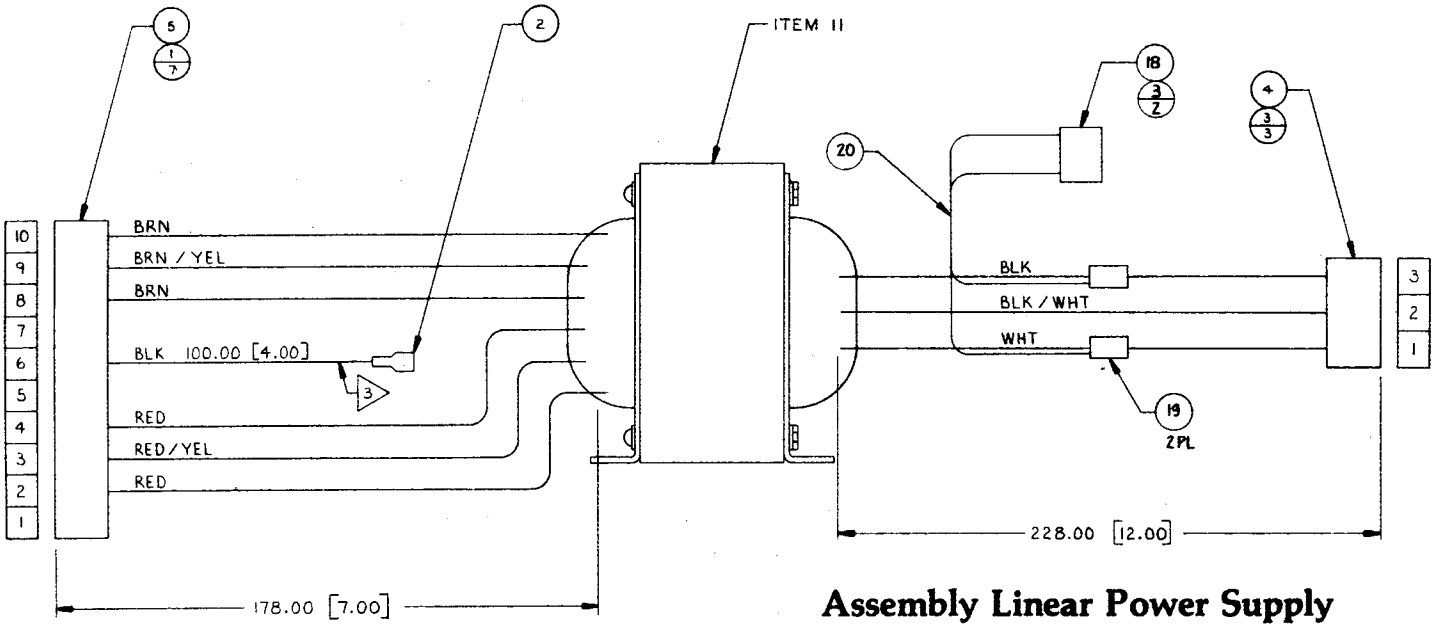

Assembly Linear Power Supply
800-0146

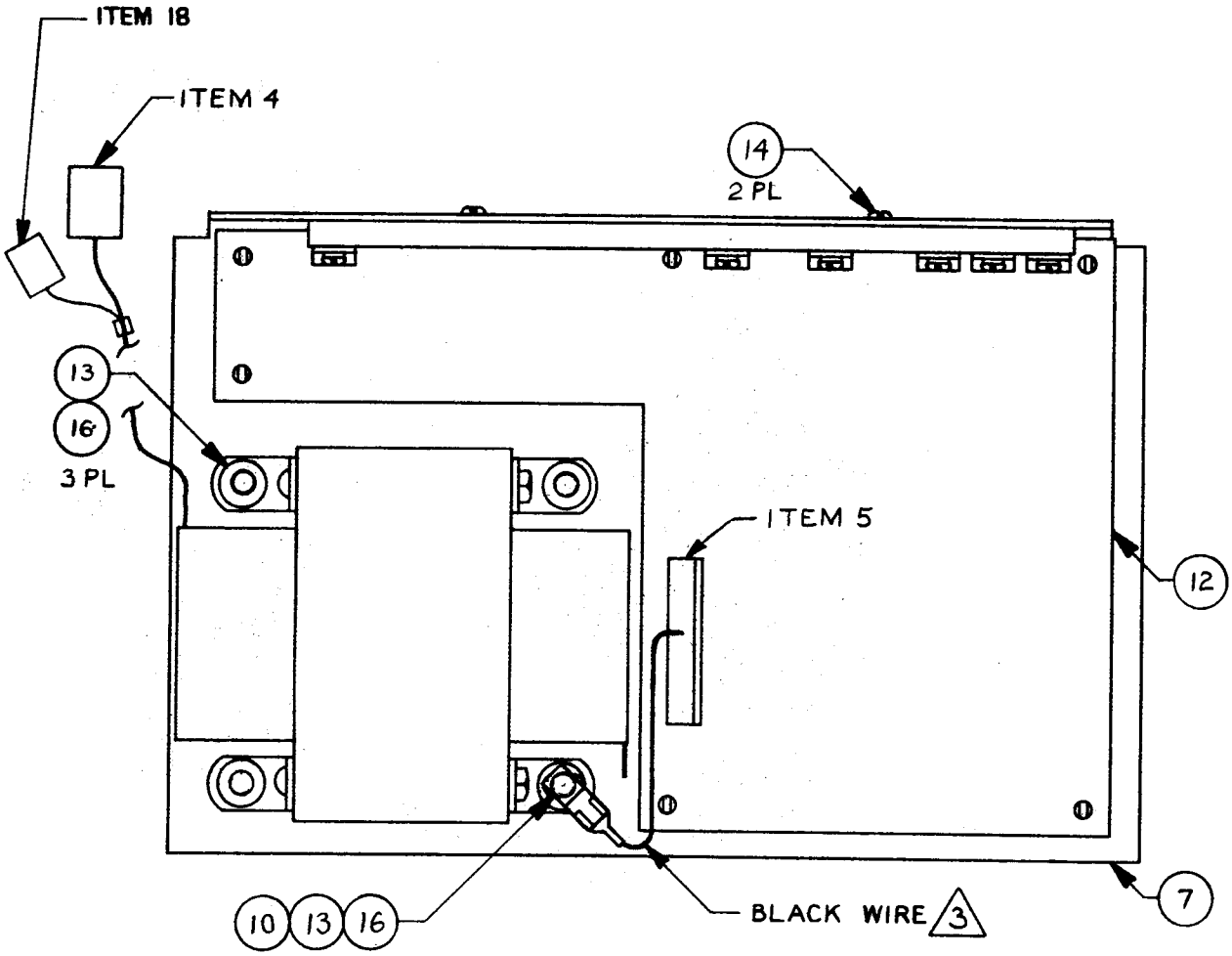

Assembly Linear Power Supply
800-0146

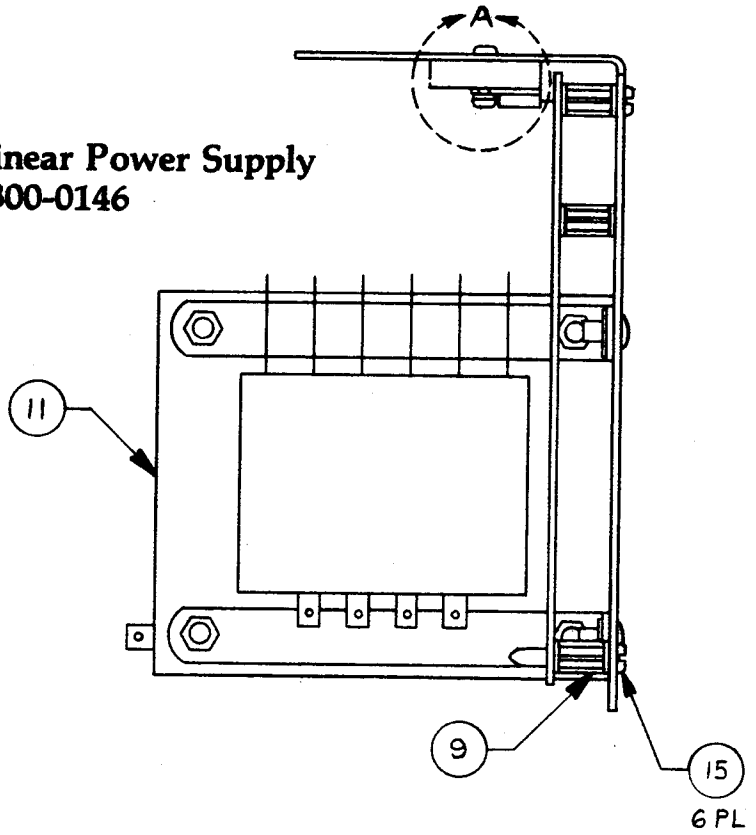

schematics

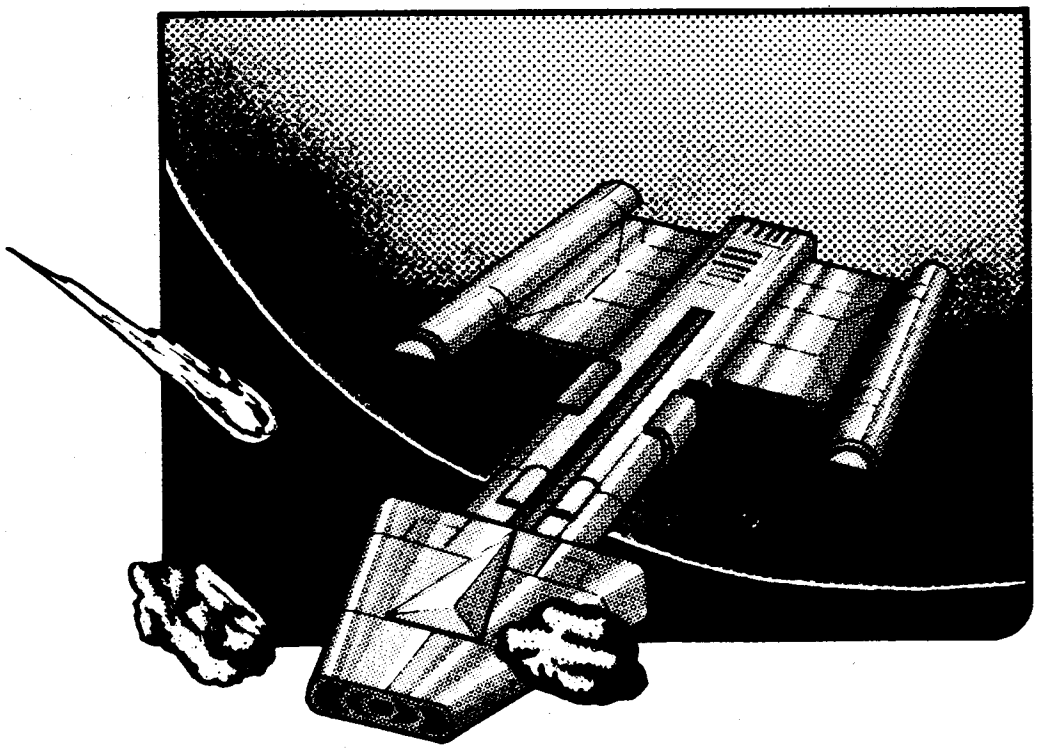

Operator Panel
Wiring Diagram

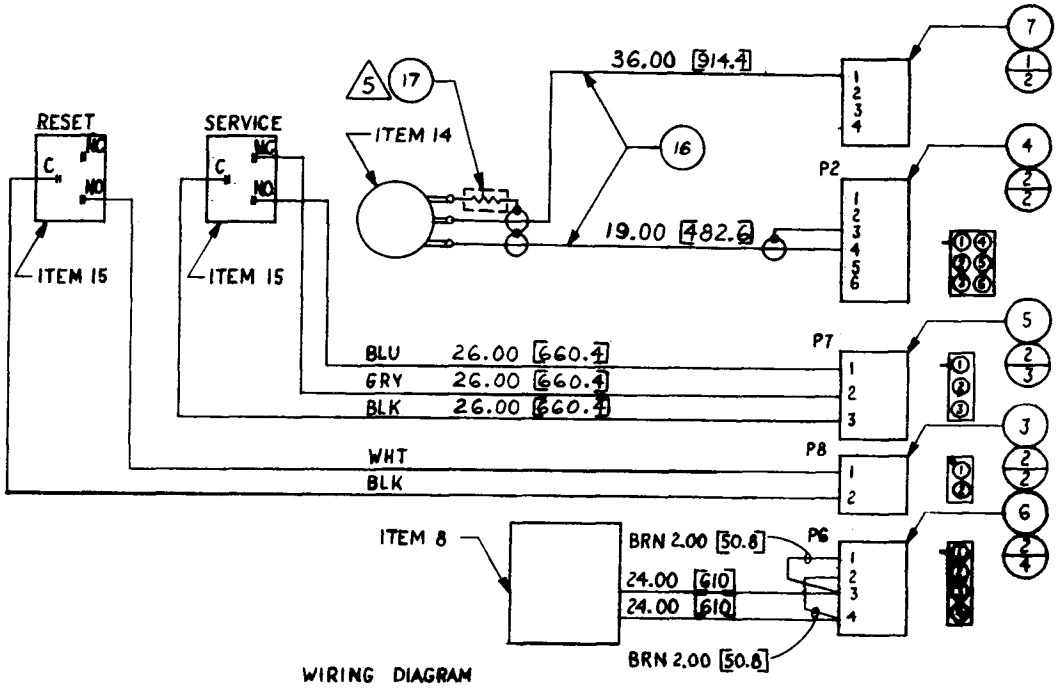

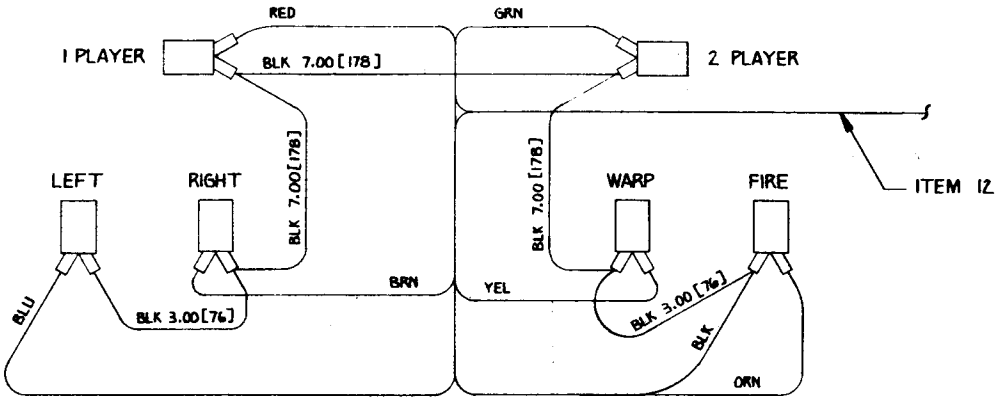

WIRING DIAGRAM 3

SWITCHES SHOWN AS VIEWED FROM WIRING SIDE OF PANEL

Control Panel Wiring Diagram

Coin Mechanism Wiring Diagram

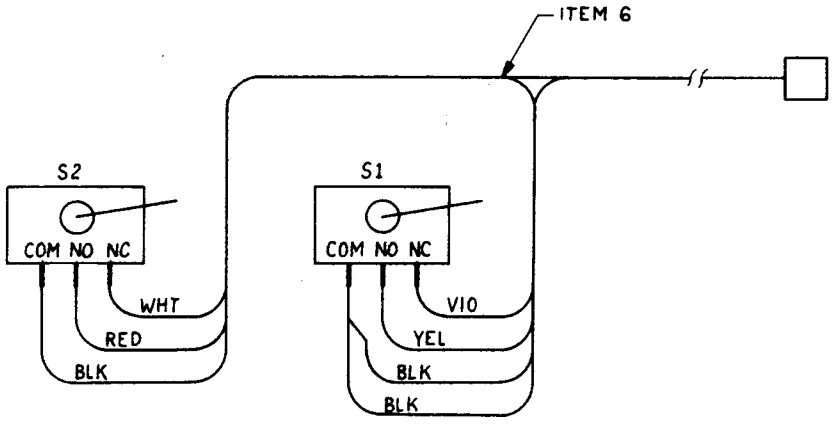

WIRING DIAGRAM

REVISIONS				
ZONE	LTR	DESCRIPTION	DATE	APPROVED
	A	RELEASED SD	12-15-80	
	B	ECN 608 SD	1-30-81	
	C	ECN 609 SD	"	
	D	ECN 641 SD	"	
	E	ECN 642 SD	"	
	F	ECN 660 SD	2-10-81	

800-0147 LAMP
SPEAKER
* 800-0192
P16
P11
* 800-0186
6-80 FAN
MOTHER BD
PROM BOARD 800-3142
6-80 SPEECH / SYN BOARD 800-3144
6-80 SOUND BOARD 800-3122
800-0177
GAME ELECTRONICS 800-3139
* 800-0178
800-0221
XFMR 560-0054
800-0146
6-80 CPU BOARD 800-3143
6-80 VIDEO BOARD 800-0106
P/O 800-0197
* 800-0173
* 800-0185
EMI
ASSY J-BOX 800-0145
P1
P2
P3
P8
P9
P7
P5
P6
* 800-0196
* 800-0195
* 800-0174
P/O 800-0197
P4
* 800-3141
800-0218
P14
800-0214
ELECTROHOME MONITOR
COIN MECH B
COIN MECH A
VOLUME
CW
330 Ω
LEFT RIGHT WARP FIRE
1PLYR 2PLYR
CONTROL PANEL 800-0176
RESET
SERVICE SWITCH
COIN COUNTER
OPERATOR PANEL 800-0197
800-0220

700-0045 | F

WIRING DIAGRAM

QTY REQD	CODE IDENT	PART OR IDENTIFYING NO.	NOMENCLATURE OR DESCRIPTION

PARTS LIST

UNLESS OTHERWISE SPECIFIED DIMENSIONS ARE IN INCHES
TOLERANCES ARE:
FRACTIONS ± DECIMALS .XX ± .XXX ± ANGLES ±

MATERIAL

FINISH

DO NOT SCALE DRAWING

NEXT ASSY	USED ON
APPLICATION	

CONTRACT NO.

APPROVALS	DATE
DRAWN SON DUONG	12-15-80
CHECKED JEFF PEASE	12-15-80

Gremlin Industries, Inc.
San Diego, California 92123

Top Assembly
Astro Blaster Upright

SIZE	CODE IDENT NO.	DRAWING NO.	REV
D		700-0045	F

SCALE NONE SHEET 7 OF 7

REVISIONS				
ZONE	LTR	DESCRIPTION	DATE	APPROVED
	—	SEE SHEET 1 FOR REVISIONS C TC	10-28-80	A. ARON

QTY REQD	CODE IDENT	PART OR IDENTIFYING NO.	NOMENCLATURE OR DESCRIPTION

PARTS LIST

UNLESS OTHERWISE SPECIFIED DIMENSIONS ARE IN INCHES
TOLERANCES ARE:
FRACTIONS ± DECIMALS .XX ± .XXX ± ANGLES ±

MATERIAL

FINISH

DO NOT SCALE DRAWING

NEXT ASSY | USED ON
APPLICATION

CONTRACT NO.

APPROVALS	DATE
DRAWN Wynema	7/17/80
CHECKED JEFF TEASE	10-26-80
R.R.M.	10-27-80

Cromemco Industries, Inc.
San Diego, California 92138

CPU Board

SIZE	CODE IDENT NO.	DRAWING NO.	REV.
D		800-0107	D

SCALE NONE | SHEET 6 OF 7

800-0107 D

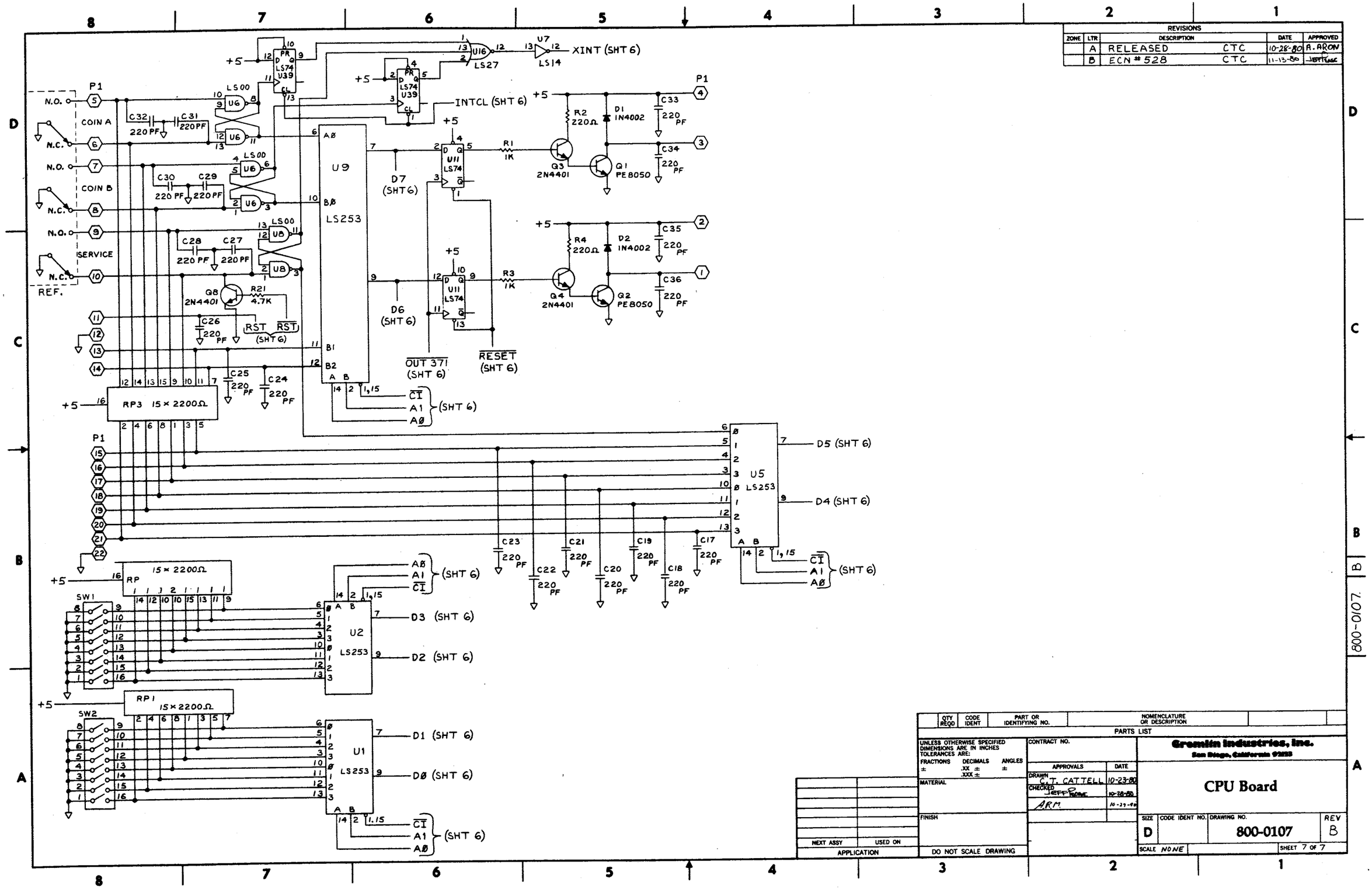

REVISIONS
ZONE | LTR | DESCRIPTION | DATE | APPROVED
A | RELEASED CTC | 10-28-80 | A. ARON
B | ECN # 528 CTC | 11-13-80
P1
N.O.
COIN A
N.C.
COIN B
SERVICE
REF.
LS00
U6
U8
C32 220 PF
C31 220 PF
C30 220 PF
C29 220 PF
C28 220 PF
C27 220 PF
Q8 2N4401
R21 4.7K
C26 220 PF
RST
(SHT 6)
C25 220 PF
C24 220 PF
RP3 15 × 2200Ω
U9 LS253
LS74 U39
U16 LS27
U7 LS14
XINT (SHT 6)
INTCL (SHT 6)
D7 (SHT 6)
D6 (SHT 6)
U11 LS74
R1 1K
R3 1K
R2 220Ω
R4 220Ω
D1 1N4002
D2 1N4002
Q3 2N4401
Q4 2N4401
Q1 PE8050
Q2 PE8050
C33 220 PF
C34 220 PF
C35 220 PF
C36 220 PF
OUT 371 (SHT 6)
RESET (SHT 6)
CI
A1
AØ
(SHT 6)
U5 LS253
D5 (SHT 6)
D4 (SHT 6)
C23 220 PF
C22 220 PF
C21 220 PF
C20 220 PF
C19 220 PF
C18 220 PF
C17 220 PF
RP 15 × 2200Ω
SW1
U2 LS253
D3 (SHT 6)
D2 (SHT 6)
RP1 15 × 2200Ω
SW2
U1 LS253
D1 (SHT 6)
DØ (SHT 6)
QTY REQD | CODE IDENT | PART OR IDENTIFYING NO. | NOMENCLATURE OR DESCRIPTION
PARTS LIST
UNLESS OTHERWISE SPECIFIED DIMENSIONS ARE IN INCHES TOLERANCES ARE:
FRACTIONS ± DECIMALS .XX ± .XXX ± ANGLES ±
MATERIAL
FINISH
DO NOT SCALE DRAWING
NEXT ASSY | USED ON
APPLICATION
CONTRACT NO.
APPROVALS | DATE
DRAWN C. T. CATTELL 10-23-80
CHECKED JEFF PEARE 10-28-80
A.R.M. 10-29-80
Gremlin Industries, Inc.
San Diego, California 92123
CPU Board
SIZE D | CODE IDENT NO. | DRAWING NO. 800-0107 | REV B
SCALE NONE | SHEET 7 OF 7
800-0107 B

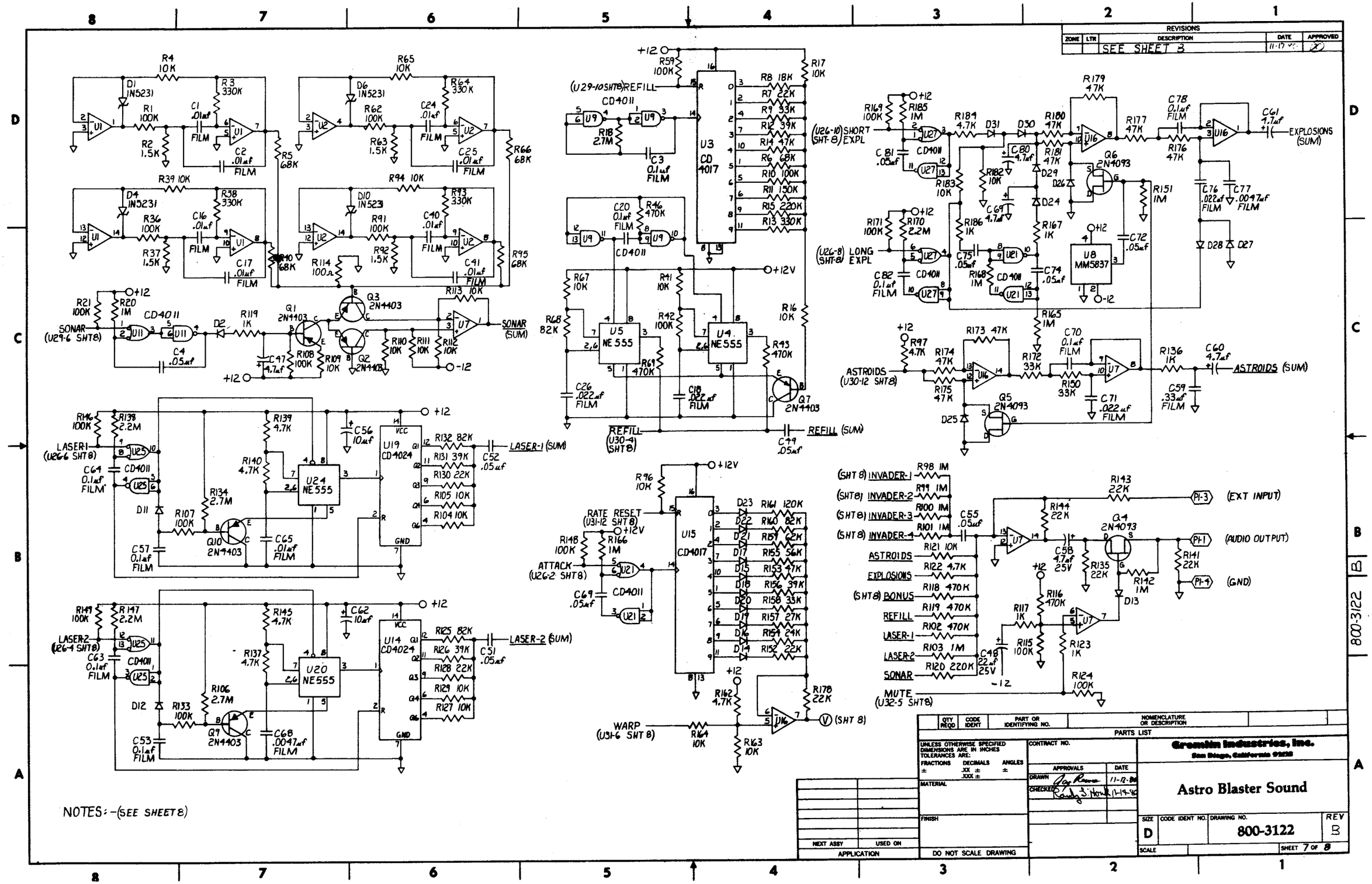

REVISIONS
ZONE | LTR | DESCRIPTION | DATE | APPROVED
SEE SHEET 3
SONAR (U29-6 SHT8)
SONAR (SUM)
LASER-1 (U26-6 SHT8)
LASER-1 (SUM)
LASER-2 (U26-4 SHT8)
LASER-2 (SUM)
(U29-10 SHT8) REFILL
REFILL (U30-4 SHT8)
REFILL (SUM)
RATE RESET (U31-12 SHT8)
ATTACK (U26-2 SHT8)
WARP (U31-6 SHT8)
(SHT 8) INVADER-1
(SHT 8) INVADER-2
(SHT 8) INVADER-3
(SHT 8) INVADER-4
ASTROIDS
EXPLOSIONS
(SHT 8) BONUS
REFILL
LASER-1
LASER-2
SONAR
MUTE (U32-5 SHT8)
(EXT INPUT)
(AUDIO OUTPUT)
(GND)
(U26-10) SHORT (SHT-8) EXPL
(U26-8) LONG (SHT-8) EXPL
EXPLOSIONS (SUM)
ASTROIDS (U30-12 SHT8)
ASTROIDS (SUM)
NOTES:-(SEE SHEET 8)
PARTS LIST
QTY REQD | CODE IDENT | PART OR IDENTIFYING NO. | NOMENCLATURE OR DESCRIPTION
UNLESS OTHERWISE SPECIFIED DIMENSIONS ARE IN INCHES TOLERANCES ARE:
FRACTIONS ± DECIMALS .XX ± .XXX ± ANGLES ±
MATERIAL
FINISH
DO NOT SCALE DRAWING
CONTRACT NO.
APPROVALS | DATE
DRAWN 11-12-80
CHECKED 11-14-80
Gremlin Industries, Inc.
San Diego, California 92128
Astro Blaster Sound
SIZE D | CODE IDENT NO. | DRAWING NO. 800-3122 | REV B
SCALE | SHEET 7 OF 8
NEXT ASSY | USED ON
APPLICATION
800-3122 B

REVISIONS				
ZONE	LTR	DESCRIPTION	DATE	APPROVED
	A	RELEASE	11-17-80	
	B	PER ECN 589	12-29-80	

NOTES:
1. ALL OP-AMPS ARE TL084CN'S.
2. ALL DIODES ARE IN914/IN4148 EXCEPT AS NOTED.
3. ALL RESISTORS ARE 1/2W 5% UNLESS OTHERWISE SPECIFIED.

QTY REQD	CODE IDENT	PART OR IDENTIFYING NO.	NOMENCLATURE OR DESCRIPTION
		170-0210	

PARTS LIST

UNLESS OTHERWISE SPECIFIED DIMENSIONS ARE IN INCHES
TOLERANCES ARE:
FRACTIONS ± | DECIMALS .XX ± .XXX ± | ANGLES ±

MATERIAL

FINISH

NEXT ASSY | USED ON

APPLICATION

DO NOT SCALE DRAWING

CONTRACT NO.

APPROVALS	DATE
DRAWN	11-12-80
CHECKED	11-14-80

Cromlin Industries, Inc.
San Diego, California 92123

Astro Blaster Sound

SIZE	CODE IDENT NO.	DRAWING NO.	REV
D		800-3122	F

SCALE NONE | SHEET 8 OF 8

800-3122 B

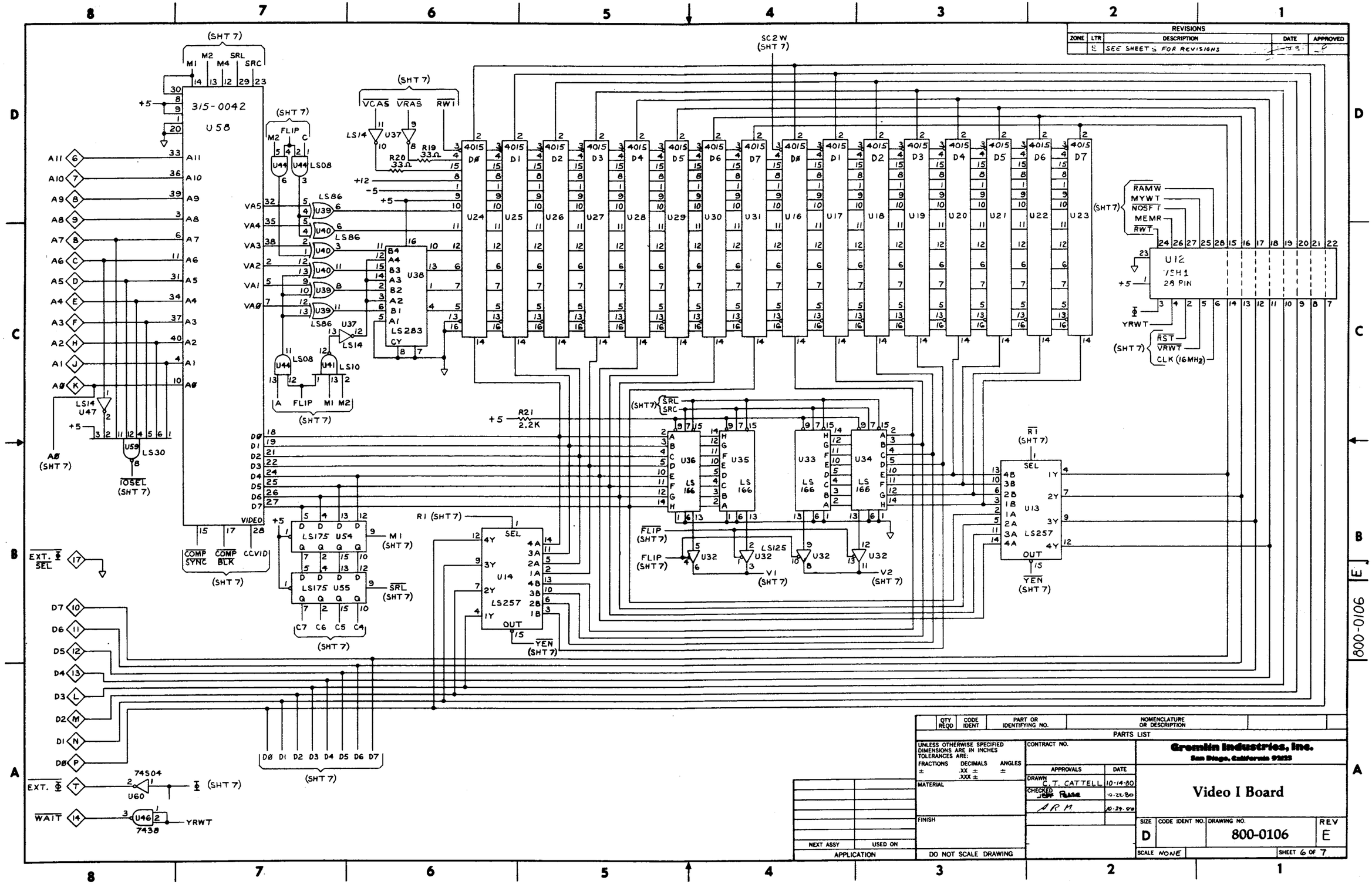

REVISIONS
ZONE LTR DESCRIPTION DATE APPROVED
E SEE SHEETS FOR REVISIONS
315-0042
U58
U12
VSH1
28 PIN
U13
LS257
U14
LS257
U36
LS166
U35
LS166
U33
LS166
U34
LS166
U38
LS283
U24
U25
U26
U27
U28
U29
U30
U31
U16
U17
U18
U19
U20
U21
U22
U23
LS175 U54
LS175 U55
U59
LS30
U47
LS14
U37
LS08
LS86
LS10
U32
LS125
U60
74S04
U46
7438
SC2W (SHT 7)
R21 2.2K
R1 (SHT 7)
R19 33Ω
R20 33Ω
VCAS VRAS RW1
RAMW
MYWT
NOSFT
MEMR
RWT
YRWT
RST
VRWT
CLK (16MHz)
COMP SYNC
COMP BLK
CCVID
VIDEO
IOSEL (SHT 7)
EXT. SEL
EXT. Φ
WAIT
YRWT
PARTS LIST
QTY REQD
CODE IDENT
PART OR IDENTIFYING NO.
NOMENCLATURE OR DESCRIPTION
UNLESS OTHERWISE SPECIFIED DIMENSIONS ARE IN INCHES TOLERANCES ARE:
FRACTIONS ±
DECIMALS .XX ± .XXX ±
ANGLES ±
MATERIAL
FINISH
DO NOT SCALE DRAWING
CONTRACT NO.
APPROVALS
DATE
DRAWN C.T. CATTELL 10-14-80
CHECKED JEFF PEASE 10-22-80
A.R.M. 10-29-80
Gremlin Industries, Inc.
San Diego, California 92123
Video I Board
SIZE D
CODE IDENT NO.
DRAWING NO. 800-0106
REV E
SCALE NONE
SHEET 6 OF 7
NEXT ASSY
USED ON
APPLICATION
800-0106 E

REVISIONS				
ZONE	LTR	DESCRIPTION	DATE	APPROVED
	A	RELEASED CTC	10-28-80	A. PRON
	E	SEE SH 5 FOR REVISIONS SD	1-14-81	

PARTS LIST			
QTY REQD	CODE IDENT	PART OR IDENTIFYING NO.	NOMENCLATURE OR DESCRIPTION

UNLESS OTHERWISE SPECIFIED DIMENSIONS ARE IN INCHES
TOLERANCES ARE:
FRACTIONS ± DECIMALS .XX ± .XXX ± ANGLES ±
MATERIAL
FINISH
DO NOT SCALE DRAWING
NEXT ASSY | USED ON
APPLICATION

CONTRACT NO.

APPROVALS	DATE
DRAWN C.T. CATTELL	10-21-80
CHECKED JEFF PEASE	10-22-80
ARM	10-29-80

Gremlin Industries, Inc.
San Diego, California 92122

Video I Board

SIZE D | CODE IDENT NO. | DRAWING NO. 800-0106 | REV E
SCALE | SHEET 7 OF 7

800-0106 E

REVISIONS				
ZONE	LTR	DESCRIPTION	DATE	APPROVED
	A	RELEASED SD	12-11-80	
	B	PER ECN 576 JF	2-?-?	
	C	PER ECN 593	01-08-80	

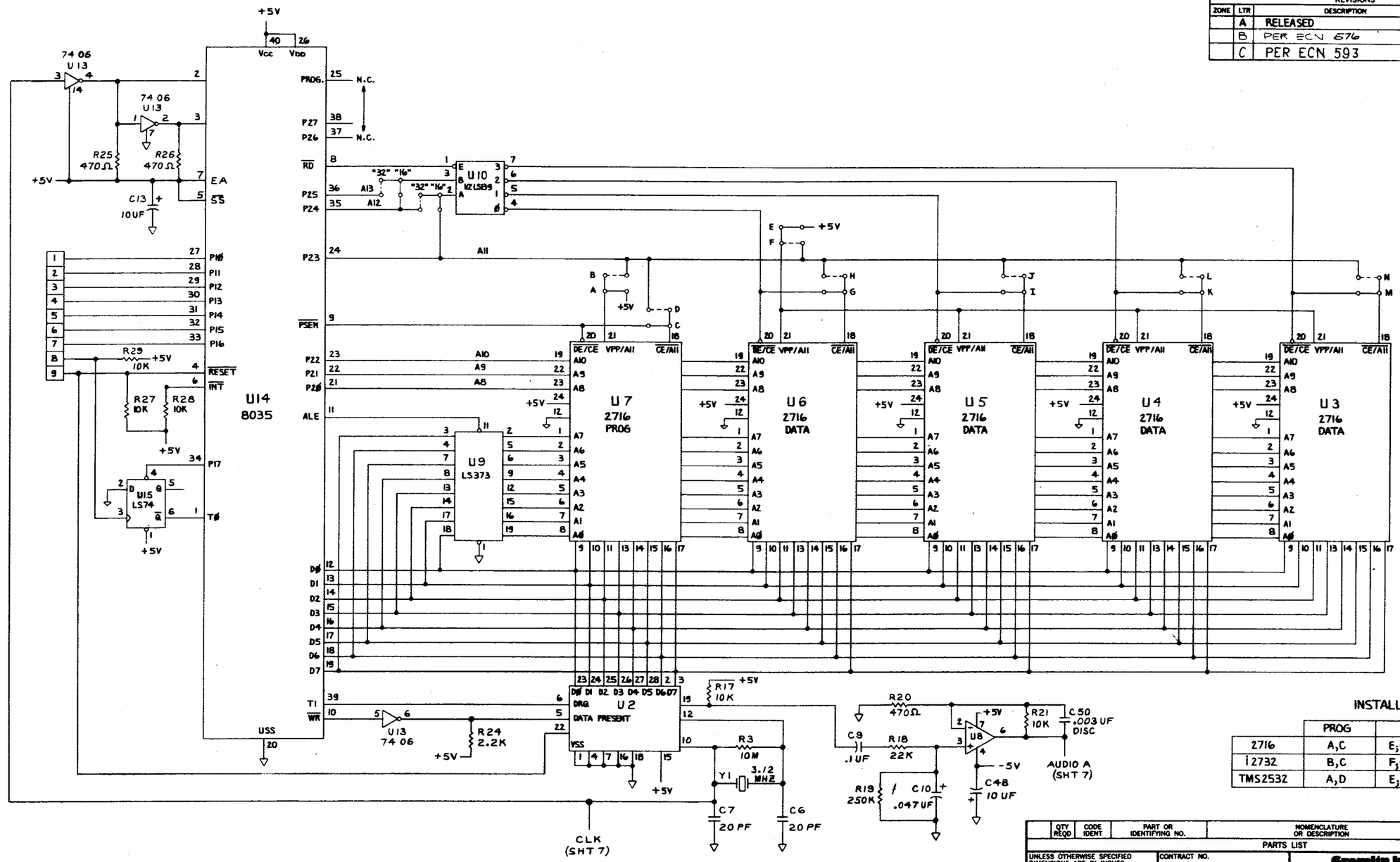

INSTALL JUMPERS

	PROG	DATA
2716	A,C	E;G/I/K/M;"16"
2732	B,C	F;G/I/K/M;"32"
TMS2532	A,D	E;H/J/L/N;"32"

QTY REQD	CODE IDENT	PART OR IDENTIFYING NO.	NOMENCLATURE OR DESCRIPTION

PARTS LIST

UNLESS OTHERWISE SPECIFIED DIMENSIONS ARE IN INCHES
TOLERANCES ARE:
FRACTIONS ± DECIMALS .XX ± .XXX ± ANGLES ±

MATERIAL

FINISH

DO NOT SCALE DRAWING

CONTRACT NO.

APPROVALS	DATE
DRAWN SON DUONG	10-25-80
CHECKED JEFF PEASE	10-28-80

NEXT ASSY | USED ON
APPLICATION

Cromlin Industries, Inc.
San Diego, California 92123

G-80 Speech Synthesis Board

SIZE	CODE IDENT NO.	DRAWING NO.	REV
D		800-0183	C

SCALE NONE | SHEET 5 OF 6

800-0183

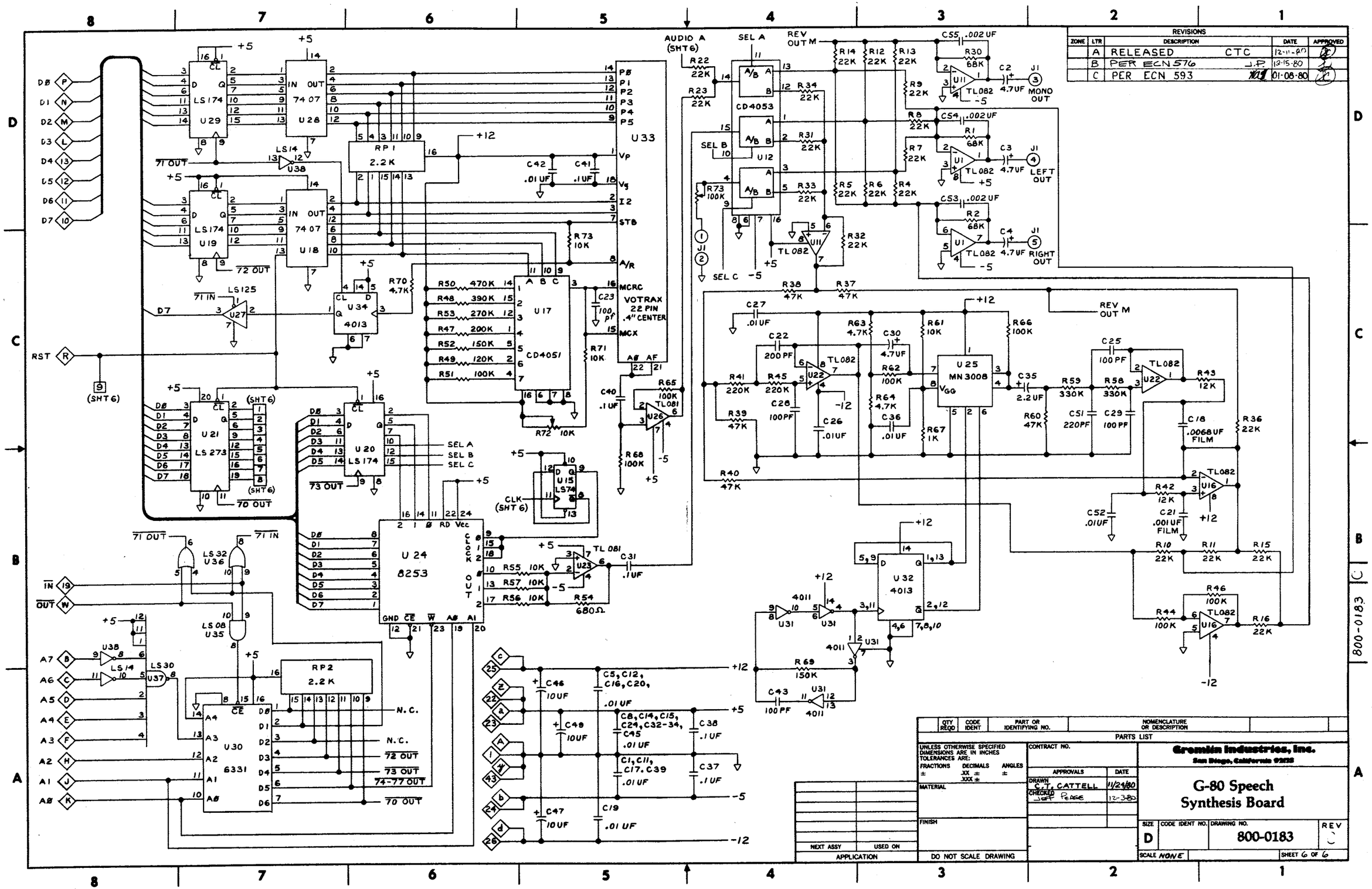

REVISIONS
ZONE | LTR | DESCRIPTION | DATE | APPROVED
A | RELEASED CTC | 12-11-80
B | PER ECN 576 J.P. | 12-15-80
C | PER ECN 593 | 01-08-80
U33
VOTRAX 22 PIN .4" CENTER
U17 CD4051
U24 8253
U30 6331
U25 MN3008
U32 4013
U12 CD4053
U21 LS273
U20 LS174
U15 LS74
U34 4013
RP1 2.2K
RP2 2.2K
AUDIO A (SHT6)
SEL A
SEL B
SEL C
REV OUT M
MONO OUT
LEFT OUT
RIGHT OUT
71 OUT
72 OUT
73 OUT
74-77 OUT
70 OUT
71 IN
RST
(SHT6)
CLK (SHT6)
N.C.
800-0183
PARTS LIST
QTY REQD | CODE IDENT | PART OR IDENTIFYING NO. | NOMENCLATURE OR DESCRIPTION
UNLESS OTHERWISE SPECIFIED DIMENSIONS ARE IN INCHES TOLERANCES ARE:
FRACTIONS ± DECIMALS .XX ± .XXX ± ANGLES ±
MATERIAL
FINISH
DO NOT SCALE DRAWING
NEXT ASSY | USED ON
APPLICATION
CONTRACT NO.
APPROVALS | DATE
DRAWN C.T. CATTELL 11/24/80
CHECKED JEFF PEASE 12-3-80
Gremlin Industries, Inc.
San Diego, California 92123
G-80 Speech Synthesis Board
SIZE D | CODE IDENT NO. | DRAWING NO. 800-0183 | REV C
SCALE NONE | SHEET 6 OF 6

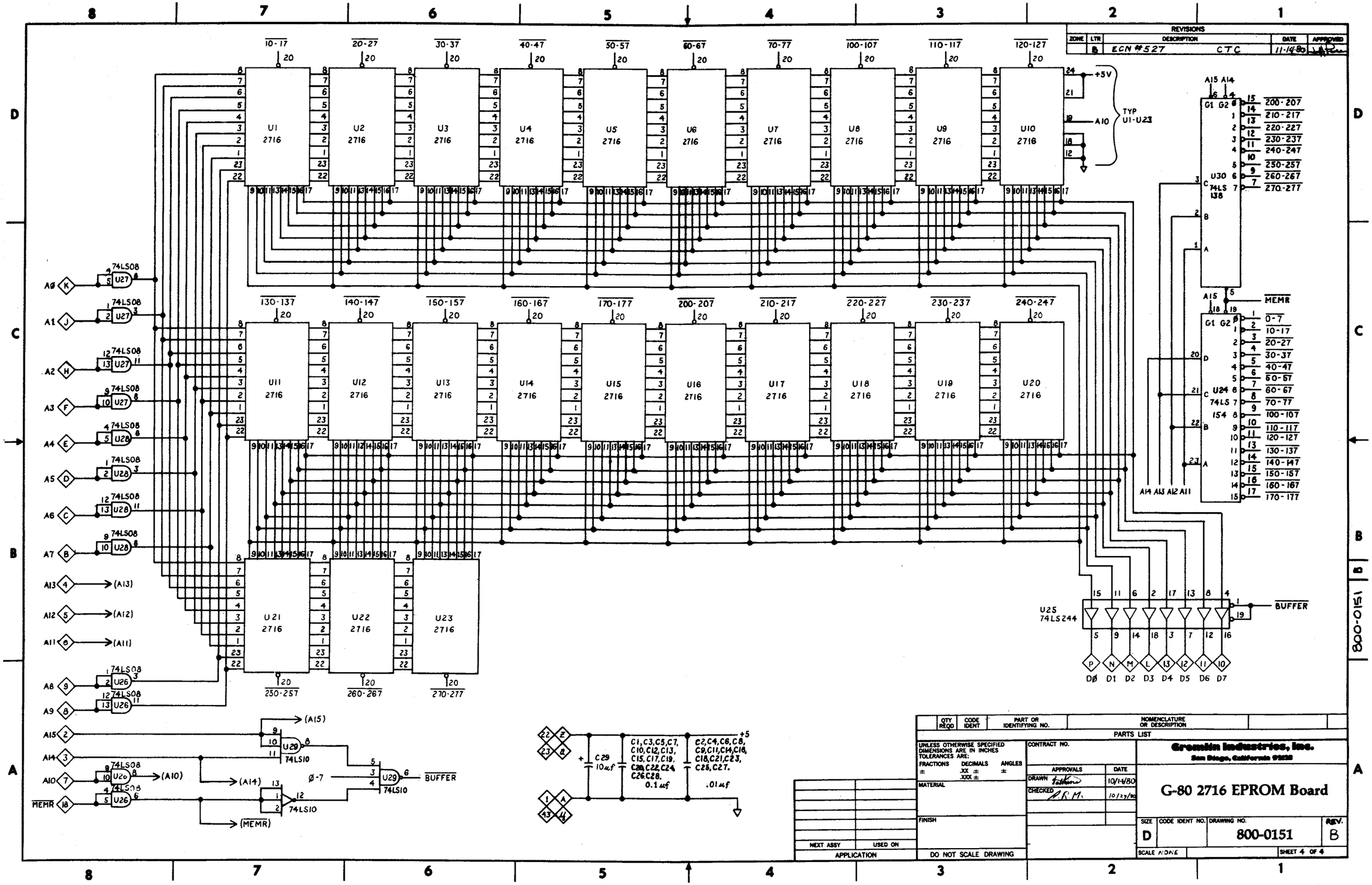

REVISIONS
ZONE LTR DESCRIPTION DATE APPROVED
B ECN #527 CTC 11-14-80
U1 2716
U2 2716
U3 2716
U4 2716
U5 2716
U6 2716
U7 2716
U8 2716
U9 2716
U10 2716
U11 2716
U12 2716
U13 2716
U14 2716
U15 2716
U16 2716
U17 2716
U18 2716
U19 2716
U20 2716
U21 2716
U22 2716
U23 2716
U30 74LS 138
U24 74LS 154
U25 74LS244
TYP U1-U23
+5V
A10
A15 A14
MEMR
BUFFER
D0 D1 D2 D3 D4 D5 D6 D7
74LS08
74LS10
(A13)
(A12)
(A11)
(A15)
(A14)
(A10)
(MEMR)
Ø-7
C29 10uf
C1,C3,C5,C7, C10,C12,C13, C15,C17,C19, C20,C22,C24, C26,C28. 0.1uf
C2,C4,C6,C8, C9,C11,C14,C16, C18,C21,C23, C25,C27. .01uf
+5
QTY REQD CODE IDENT PART OR IDENTIFYING NO. NOMENCLATURE OR DESCRIPTION
PARTS LIST
UNLESS OTHERWISE SPECIFIED DIMENSIONS ARE IN INCHES TOLERANCES ARE:
FRACTIONS ± DECIMALS .XX ± .XXX ± ANGLES ±
MATERIAL
FINISH
DO NOT SCALE DRAWING
CONTRACT NO.
APPROVALS DATE
DRAWN 10/14/80
CHECKED 10/29/80
NEXT ASSY USED ON
APPLICATION
Gremlin Industries, Inc.
San Diego, California 92128
G-80 2716 EPROM Board
SIZE D CODE IDENT NO. DRAWING NO. 800-0151 REV. B
SCALE NONE SHEET 4 OF 4
800-0151

REVISIONS				
ZONE	LTR	DESCRIPTION	DATE	APPROVED
	A	RELEASED CTC/LVH	9-23-80	
	B	PER ECN # 554 MW	12-09-80	JP
	C	PER ECN # 546 MW	12-09-80	JP
	D	PER ECN # 565 MW	12-10-80	JP
	E	PER ECN 631 WJB	1-26-81	

230 VAC
115 VAC
100 VAC
0 VAC
TO MONITOR
MR501 (4)
8.2 VRMS
8.2 VRMS
16 VRMS
16 VRMS
C28 .1UF
C27 .1UF
C24 .1UF
C21 .1UF
F1 5A
F2 1.5A
F3 3A
F4 3A
C25 6800 UF 16V
C24 3300 UF 16V
C22 4700 UF 25V
C23 4700 UF 25V
Q5 TIP 120
C20 10 UF
R32 0.1 5W
+5
GND
-5
+12
-12
C26 100 UF 25V
C29 .1UF
C4 .01 UF
R33 220
R2 100Ω
Q1 2N 4403
R7 1K
R5 1K
R4 3.3K
R8 10K
723 U1
C5 .005 UF
R6 1K
R3 12K
R1 4.7K
C2 10 UF 25 V
C3 10 UF 25 V
C30 .1UF
U4 320T-5
U5 320T-12
AUDIO IN
C19 10 UF
+Vcc
-Vcc
R10 47K
R12 Q2 3W
C7 10 UF 25 V
R9 470
R11 1K
Q2 2N 4403
TIP125 Q6
R21 1K
R30 2.7K
R23 1K
R22 1K
R29 4.7K
U2 TL081
7.15V
C6 .1UF
C11 10 UF 25 V
C14 10 UF 25 V
C32 .1UF
C31 .1UF
C15 100 UF 25V
C8 .1UF
C17 .001 UF
C18 .1UF
C33 .01 UF
R26 2.2K
R18 680
R25 22K
R27 10K
Q5 2N4401
Q4 2N4401
R17 22
Q3 2N4403
TIP 120 Q9
C9 100 PF
D11 IN914
D10 IN914
C12 20 PF
R20 22K
R24 1K
C16 10 UF
C10 10UF
R13 2.2K
R16 2.2K
TIP 125 Q8
R15 0.2
R14 0.2
R17 10
C13 .1UF
AUDIO OUT
D9 IN914
R28 100K

1. ALL RESISTANCE VALUES ARE IN OHMS, 1/2 W, ±5%.

NOTES: UNLESS OTHERWISE INDICATED

QTY REQD	CODE IDENT	PART OR IDENTIFYING NO.	NOMENCLATURE OR DESCRIPTION

PARTS LIST

800-0146
NEXT ASSY | USED ON
APPLICATION

UNLESS OTHERWISE SPECIFIED DIMENSIONS ARE IN INCHES
TOLERANCES ARE:
FRACTIONS ± | DECIMALS .XX ± .XXX ± | ANGLES ±

MATERIAL

FINISH

DO NOT SCALE DRAWING

CONTRACT NO.

APPROVALS	DATE
DRAWN CTC Lien van Ho	7-2-80
CHECKED Kathleen	1-23-80

Cromlin Industries, Inc.
San Diego, California 92138

Game Power Supply

SIZE	CODE IDENT NO.	DRAWING NO.	REV.
D		800-0128	E

SCALE NONE | SHEET 6 OF 6
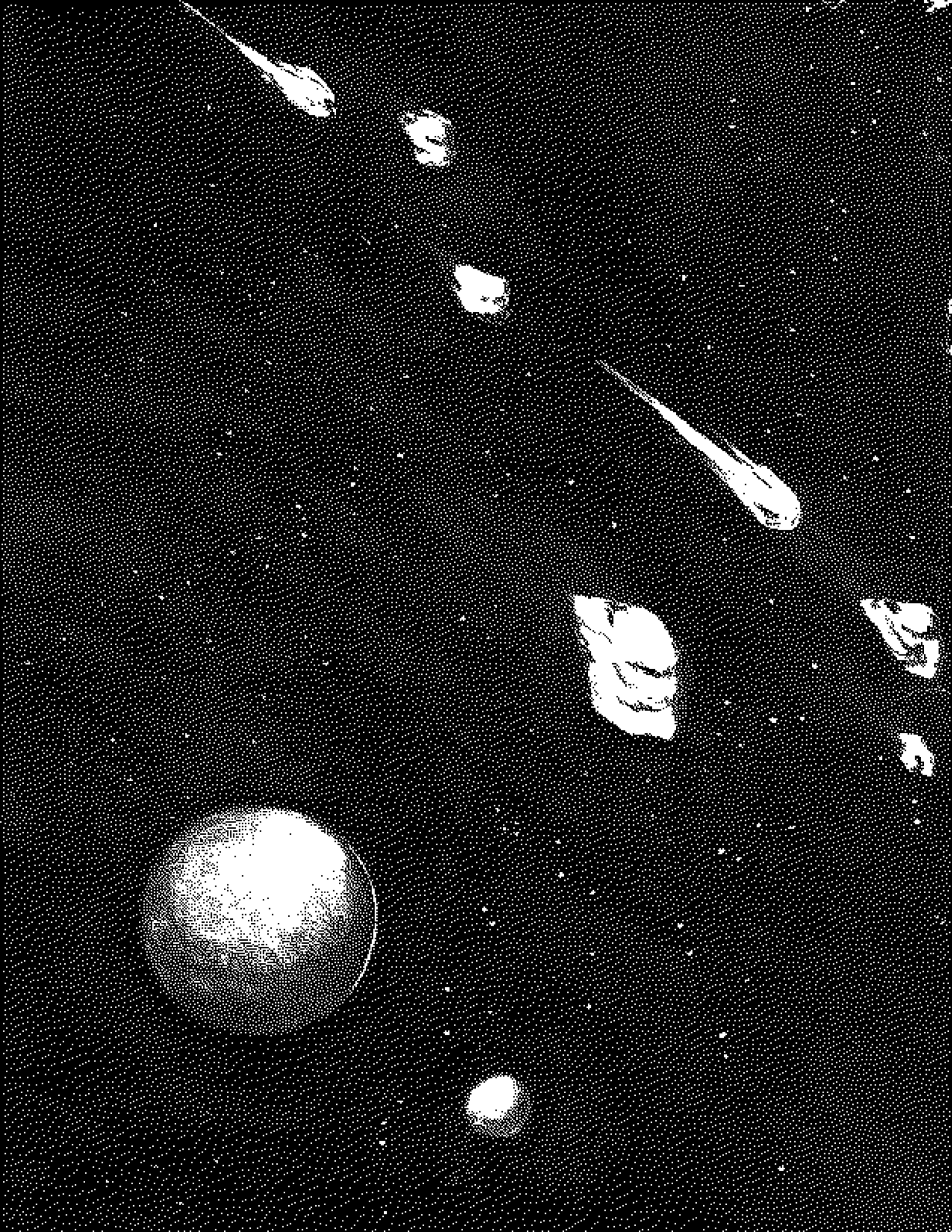
800-0128 E