KONAMI'S GUN SHOOTING GAME

OPERATOR'S MANUAL

TWO POWERFUL MACHINE GUNS WITH KONAMI'S NEW RECOGNITION SYSTEM
2P CABINET TO DOUBLE THE EXCITEMENT AND DOUBLE THE INCOME
OUR POWERFUL HAND MACHINE GUN GIVES YOU A FREE STYLE SHOOTING EXPERIENCE

OPERATION THUNDER HURRICANE

OPERATION THUNDER HURRICANE™

©1997 KONAMI ALL RIGHTS RESERVED.

KONAMI®

WARNING

"OPERATION THUNDER HURRICANE™" is an original product developed by KONAMI CO.,LTD.. KONAMI CO.,LTD.reserves all the copyrights, trademarks and other industrial property rights with respect to this product.

PN.900185 GN680-H

About this product

Thank you for purchasing this Konami product. This manual explains how to operate your game machine correctly and safely.

- Failure to operate the machine correctly could result in malfunction or accidents, so please read this manual carefully before commencing operation. Be sure to operate the machine as described in this manual.
- Keep this manual carefully so as to be ready for use when necessary.
- If the machine still fails to display or to get started, immediately turn OFF the main power switch and contact your nearest dealer.

This manual covers the following models:

- GN680-TB
- GN680-UC
- GN680-HD
- GN680-AF

The specifications of GN680-TB may be somewhat different from GN680-UC, GN680-HD and GN680-AF. In such a case, read the descriptions of the model which applies to the game machine you are operating.

- The specifications of this product are subject to change without notice for reasons such as improving the performance.
- The contents of this game, its main data and design are protected by copyright law and industrial property law.
- Unauthorized reproduction of this document or any of its contents is strictly forbidden.

© 1997 KONAMI ALL RIGHTS RESERVED.

This equipment has been tested and found to comply with the limits for a Class A digital device, pursuant to Part 15 of the FCC Rules.
These limits are designed to provide reasonable protection against harmful interference when the equipment is operated in a commercial environment. This equipment generates, uses, and can radiate radio frequency energy and, if not installed and used in accordance with the instruction manual, may cause harmful interference to radio communications. Operation of this equipment in a residential area is likely to cause harmful interference in which case the user will be required to correct the interference at his own expense.

Contents

■ Precautions for use……2
安全使用注意事項……8

1 Specifications……7
規　格……13

2 Names of parts and list of main parts……14

3 How to play……16

4 Opening and closing the doors

4—1 Opening and closing the maintenance door……17
4—2 Opening and closing the coin door……18

5 PCB settings

5—1 PCB start-up check (self test)……19
5—2 Adjusting the game environment (manual test)……20
5—3 Mode descriptions……21

6 Setting up the game machine

6—1 Machine gun's shooting range……26
6—2 Connecting the units……27
6—3 Fastening the adjusters……30
6—4 AC bracket……30
6—5 Service panel……31
6—6 Separating and moving the units……32
6—7 Moving the coin counter……33

7 Maintenance and annex

7—1 Replacing the coin selector……34
7—2 Replacing the fluorescent light……35
7—3 Replacing the push-button……36
7—4 Replacing the machine gun unit……37
7—5 Adjusting the projector……40
7—6 Wiring diagram……45

Precautions for use

In this manual, the precautions to be followed without fail in order to prevent damage to persons to install, use or maintain "OPERATION THUNDER HURRICANE™" or other persons or to properties are shown as follows.

Be sure to read the following

●The following suggestions show the degree of danger and damage caused when the product is used improperly with the suggestions disregarded.

⚠ WARNING	Indicates a situation where disregarding the suggestions could result in death or serious injury.
⚠ CAUTION	Indicates a situation where disregarding the suggestions could result in injury or product damage.

●The following graphic suggestions describe the types of precautions to be followed.

⚠	Indicates a matter of which care should be taken.
⃠	Indicates a matter which is forbidden.
	Indicates a matter which should be performed without fail.

Setting Up

WARNING

- **Be sure to consult your nearest dealer when setting up, moving or transporting this product.**
  - ▶ This product should not be set up, moved or transported by anyone other than industry specialists. Doing so could result in injury or product damage.
  - ▶ When setting up this machine, be sure to lock the 8 adjusters to fix the machine. If the game machine is not fastened securely, injury or accidents could be caused by the machine rocking.
  - ▶ When setting up this product, take care that no undue force is applied to the connecting sections of the game machine. Failure to do so could cause injury, accidents or product damage.

- **This product is an indoor game machine. Never set up the game machine outside.**
  - ▶ Setting up this product outside could result in accidents or equipment failure.

- **Do not set up the game machine near emergency exits.**
  - ▶ Doing so could block exits in time of emergency and could result in death or serious injury.

- **Do not set up the game machine:**
  - in a place exposed to rain or moisture.
  - in a place exposed to direct sunlight.
  - in a place exposed to direct heat from air-conditioning and heating equipment, etc..
  - near hazardous flammable substances such as thinner and kerosene.
  - on an inclined or uneven floor.
  - near fire extinguishing equipment.
  - in a place exposed to strong vibration.
  - in a place exposed to excessive dust.
  - near equipment generating strong magnetism or electric waves.

- **Do not place containers holding chemicals or water on or near the game machine.**
  - ▶ Electrical shock or damage could be caused by water or foreign matter entering the inside of the machine.

- **Do not place objects near the ventilating holes.**
  - ▶ Doing so could cause the internal temperature to rise excessively, resulting in equipment failure.

- **Do not bend the power cord by force or place heavy objects on it.**
  - ▶ Doing so could result in electric leakage or fire.

- **Never plug or unplug the power cord with wet hands.**
  - ▶ Doing so could result in electrical shock.

- **Never unplug by pulling the power cord.**
  - ▶ Doing so could damage the cord, resulting in electric leakage or fire.

Setting Up

CAUTION

- **Be sure to use indoor wiring for within the specified voltage range. For extension cord, use indoor wiring of the specified rating or more.**
  ▶Failure to do so could result in fire or equipment failure.
- **Never plug more than one cord at a time in the electrical receptacle.**
  ▶Doing so could result in fire or electrical shock.

- **Do not lay the power cord where people walk through. You may tread on or stumble over them.**
  ▶You may stumble down and get injured, or damage the cord or the cable.

- **Be sure to connect a ground cable to the ground terminal of the game machine.**
- **Clearances of 100 mm(3.94in) or more should be created between the game machine and walls.**
- **Once all the units have been coupled together, never roll the machine along over a rugged floor.**
  ▶Otherwise you could get injured or the machine damaged.

Operation

WARNING

- **Hold the machine gun in the right position. Be careful not to wave or drop the machine gun.**
  ▶Otherwise it could result in injury or accident.

- **Do not use this product anywhere other than industrial areas.**
  ▶Using in a residential area or an area next to a residential area could affect signal reception of radios, television sets, telephones, etc..

- **If there is any abnormality such as smoke, bad smell or abnormal noise being emitted from the machine, immediately unplug the power cord to stop operating it.**
  ▶Using the machine in abnormal conditions could result in fire or accidents.

In case of abnormality:

1. Turn OFF the main power switch.
2. Unplug the power cord.
3. Contact your nearest dealer.

- **Do not leave the power cord plugged improperly or covered with dust.**
  ▶Doing so could result in electrical shock or fire, so inspect the power cord periodically.

- **Never disassemble, repair or modify any section other than those specified in this manual.**
  ▶Doing so could result in fire, malfunction or equipment failure.
  We do not assume any responsibility for any damages that would be caused by tampering with the machine.

Operation

CAUTION

- **The following users should not play the game.**
  ▶Doing so could cause accidents or illness.

• Those under the influence of alcohol.	• Those suffering from or being treated for arm or wrist ailments.

- **Do not plug or unplug the power cord with wet hands.**
  ▶Doing so could result in electrical shock.

- **When handling the power cord, take care of the following:**
  ▶Improper handling could result in fire or electrical shock.

• Do not damage the power cord.	• Do not modify the power cord.
• Do not bend the power cord excessively.	• Do not twist the power cord.
• Do not heat the power cord.	• Do not pull the power cord.
• Do not bind the power cord.	• Do not tread on the power cord.
• Do not sandwich the power cord.	• Do not drive a nail into the power cord.

- **If the power cord or power plug becomes damaged, stop using the machine immediately.**
  ▶Using a damaged power cord or power plug could result in fire or electrical shock.
- **After the play is over, make sure the machine gun is back in the specified position.**
  ▶Otherwise the machine gun could come down and get you injured or get itself damaged.

Inspection and cleaning

WARNING

- **Be sure to turn OFF the power and unplug the power cord from the receptacle before inspecting or cleaning the machine.**
  ▶Failure to do so could result in electrical shock.

- **When replacing parts, be sure to use parts of the correct specifications. Never use parts other than the specified ones.**
  ▶Using improper parts could result in fire or equipment failure.

- **Never disassemble, repair or modify any section other than those specified in this manual.**
  ▶Doing so could result in fire, malfunction or equipment failure.
  We do not assume any responsibility for any damages that would be caused by tampering with the machine.
- **To clean the game machine, wipe it with a soft cloth dampened in a neutral detergent and wrung out.**
  ▶Using organic solvents such as thinner may decompose the material.
  ▶Electrical shock or equipment failure could be caused by water entering the inside of the machine.

Moving and Transportation

CAUTION

- The game machine contains parts such as a projector, electronic components and precision components which are sensitive to vibration and impact. Great care therefore should be taken when moving and transporting the game machine. Be sure not to let the machine tip over.

- Before moving the machine, separate the units and fully raise the 8 adjusters. Move the units on the casters. Never forget to turn OFF the main power switch and unplug the power cord.
  ▶Failure to do so could result in accidents, damage or equipment failure.

- In moving the machine, be careful to keep the machine's connections free from undue force. Before rolling the machine along on a rugged floor, be sure to separate the units.
  ▶Failure to do so could cause injury, accidents or product damage.

Disposal

WARNING

- When disposing of the projector of this product, do not leave it with the screen exposed.
  ▶Doing so could result in fire due to direct sunlight, etc..

- If the screen is removed, be careful not to leave it in direct sunlight.
  ▶Doing so could cause burns or fire.

PRECAUTION IN HANDLING

- When setting up, handling, inspecting, maintaining, moving or transporting this product, follow the procedures and instructions set forth in this manual and perform such work safely.
- Do not remove labels of "WARNING", "CAUTION", etc. attached to the product.
- Do not set up, handle, inspect, maintain, move or transport this product under conditions equivalent to the condition of "WARNING" or "CAUTION" specified in this manual.
- If a new owner is to have this product as a result of transfer, etc., be sure to give this manual to the new owner.

1 Specifications

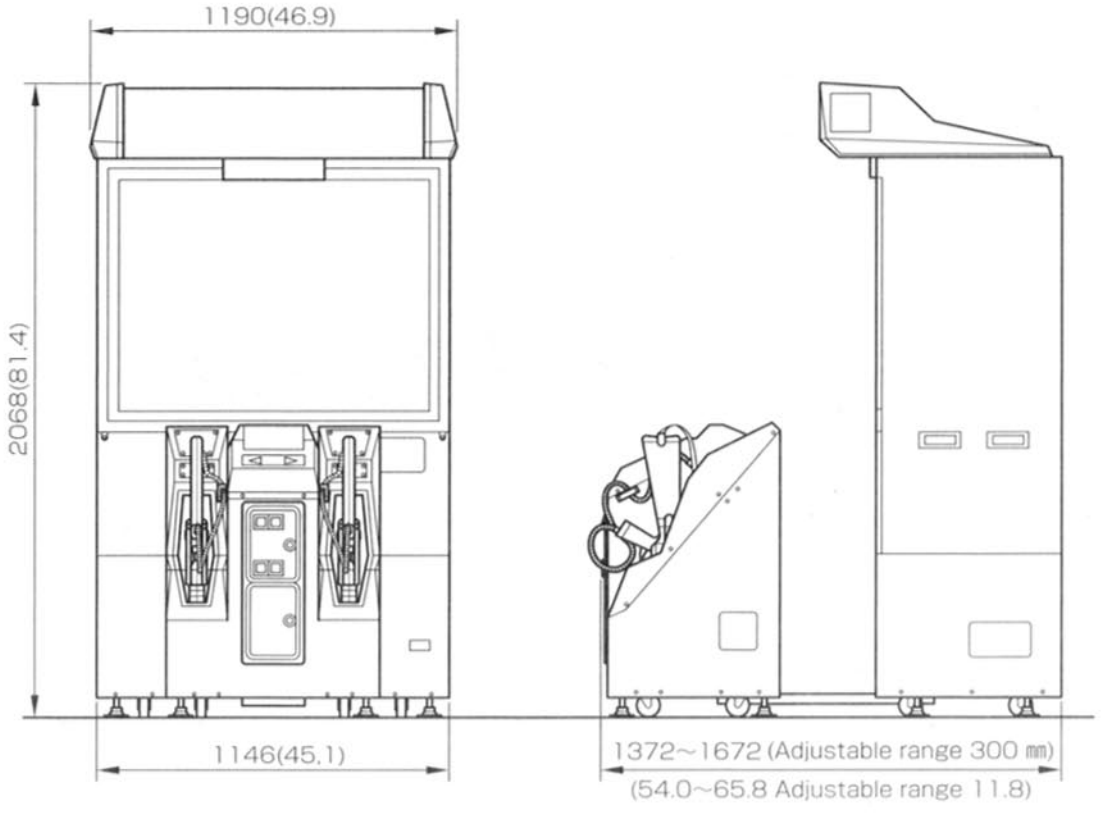

Specifications

Dimensions	Refer to the figure above: mm (in)
Weight	263kg (580lb) Projector unit: Approx. 174 kg (384lb), Front unit: Approx. 72 kg (159lb), Billboard: Approx. 17 kg (37lb)
Rated power consumption	350W
Monitor	50-inch color projector (automatic 15kHz/24kHz switching)
Service condition	Temperature 10 to 35℃ (50 to 95°F), Humidity 20 to 80% (No dewing is allowed.)
Attachments	• Instruction manual ····· this manual • Keys for coin door ····· 2 • Keys for maintenance ····· 2 • Billboard ····· 1 • Coupler ····· 1 • Coupler lock bolt, spring washer ····· 2 each • Remote control for adjusting projector ····· 1 • UM-4 (AAA batteries) ····· 2 • Label for remote control for adjusting projector ····· 1 • Hex wrench (6mm) ····· 1

●If any part is defective or not found, contact your nearest dealer.
●The specifications of this product are subject to change without notice for reasons such as improving the performance.

■ 安全使用注意事項

本書説明爲防止危害“OPERATION THUNDER HURRICANE ™”的設置、使用、維護等人員及他人和財產的安全注意事項，本書內容務請遵守。

務 請 閱 讀

●本書使用如下標注，區分無視表示內容、錯誤使用時產生的危險和損害程度。

⚠警告	該項標注表示“有可能造成死亡或身負重傷”的內容。
⚠注意	該項標注表示“有可能造成傷害或物品損壞”的內容。

●本書使用如下圖標，説明務請遵守的內容種類。

⚠	本圖標表示“提請注意”的內容。
⃠	本圖標表示“禁止”的內容。
	本圖標表示“強制實行”的內容。

設置時

⚠ 警告

●設置、移動或搬運時，務必同當地的經銷店商洽。
▶非專業人員執行設置、移動或搬運時，有可能受傷或損壞殼體。
▶安裝本機時，務必用八個位置的可調支腳確切固定。
固定不穩定時，可引起殼體晃動，及致受傷或造成事故。
▶設置本機時，不得在殼體連接部位強加外力。
否則，可致受傷或造成事故、損壞殼體。

●本機爲室內用游戲機，千萬不要設置在室外。
▶設置在室外，可造成事故或故障。

禁 止

●本機不得設置在建筑物太平門附近。
▶否則，發生災害時妨礙人們逃生，造成傷亡。

禁 止

●本機尚不得設置在以下場所。
▶否則，可造成事故或故障。
・漏雨或潮濕結露的場所
・陽光直射的場所
・直接受到取暖裝置的熱氣吹拂的場所
・煤油、信那水等有引火性的危險物附近
・傾斜、不堅硬、不穩定的地面
・消防設備的附近
・晃動劇烈的場所
・多灰塵的場所
・產生強大磁場或電波的設備附近

禁 止

●本機上面或周圍不得放置盛水或藥劑的容器或物品。
▶水份或異物進入內部，可致觸電或故障。

禁 止

●通風口附近不得放置物品。
▶有妨通風，則內部溫度異常昇高，造成火災或故障。

禁 止

●不得強行彎曲電源軟線，也不得在其上壓放重物。
▶否則，可造成漏電事故或火災。

禁 止

●千萬不得用濕手拔下或插入電源插頭。
▶否則，可致觸電。

禁 止

●不得牽拉電源軟線拔下電源插頭。
▶否則，電源軟線損傷，造成漏電事故或火災。

禁 止

設置時

⚠ 注意

●務必使用符合規格的電源。利用加長電線時，應使用符合規格的室內用線。
▶否則，可造成火災或故障。

●千萬不得使用多分支插座。
▶否則，可造成火災或觸電。

禁 止

●不得將電源軟線伸出到被人踐踏或絆人的通道上。
▶否則，可致翻倒而傷人，而且，可損傷軟線。

禁 止

●本機的接地端子務必連接地線。

禁 止

●設置本機時，應離開牆面等10公分以上。

●接好各單元後，絕對不可穿越段差等處。
▶否則，可致受傷和造成事故，損壞本機。

使用時

⚠ 警告

●應以正確姿勢使用機關槍。不得旋回轉動和摔落。
▶否則，可致受傷或事故。

●本機不得在工商業地區以外使用。
▶在住宅區或其鄰接處使用，會妨礙電視機、收音機、電話機等接收信號。

禁 止

●萬一從本機中冒煙、發出氣味或異常聲響等，應立即拔下電源插頭，停止使用。
▶在異常狀態下使用，可造成火災或事故。

拔下電源插頭

判 斷 爲 異 常 時

1 斷開電源
2 從插座上拔下電源插頭
3 通知當地的經銷店

●不得在電源插頭未正確插入插座中或積滿灰塵的狀態下放置不管。
▶否則，可造成觸電或火災，應定期檢查。

禁 止

●千萬不得拆卸、修理或改造本書未指示的部位。
▶否則，可造成火災、異常工作或故障。
需要修理等時，請委託當地的經銷店。
因改造本機而造成損害，本公司概不負責。

禁止拆卸

使用時

⚠注意

●應提請屬於下列情況之一的顧客，不要利用本機游戲。
▶否則，可致事故或引發疾病，加重症狀。

禁 止

·飲酒者	·手臂、手腕有病，或正在接受治療

●千萬不得用濕手拔下或插入電源插頭。
▶否則，可致觸電。

禁 止

●不得如下操作電源軟線。
▶否則，可造成火災或觸電。

禁 止

·劃傷	·加工	·強行彎曲	·扭轉	·加熱
·牽拉	·打結	·腳踏	·擠壓或打釘	

●萬一電源軟線、電源插頭損傷時，應立即停止使用，委託當地的經銷店更換零件。
▶在損傷狀態下使用，可造成火災或觸電。

●游戲後，應確認機關槍是否已正確收存。
▶否則，機關槍倒下可致受傷或損壞。

檢查和打掃

⚠警告

●檢查或打掃本機時，務必斷開電源，從插座上拔下電源插頭。
▶否則，可致觸電。

拔下電源插頭

●更換零件或易耗品時，務必使用本公司指定的產品。千萬不得使用或混用其它產品。
▶否則，可造成火災或故障。

禁 止

●千萬不得拆卸、修理或改造本書未指示的部位。
▶否則，可造成火災、異常工作或故障。
需要修理等時，請委託當地的經銷店。
因改造本機而造成損害，本公司概不負責。

禁止拆卸

●打掃本機時，用軟布蘸取中性洗劑，擰乾後再擦拭。
▶使用信那水等有機溶劑，可致本機變質。
▶本機內部滲水，可造成觸電或故障。

移動／搬運時

⚠ 注意

●本機內部裝有投影機、電子元件、精密器件等，不耐震動和沖撞的零件。移動和搬運時，應精心操作。
千萬不要翻倒橫放。

禁　止

●移動本機前，應分離本機，將八個位置的可調支腳調至最上面，用腳輪移動。
另外，務必關閉電源開關，從電源插座上拔下電源插頭。
▶否則，可造成事故、損傷或故障。

拔下電源插頭

●移動本機時，不得在殼體連接部位強加外力。
越過台階等時，務必預先分離本機後移動。
▶否則，可致受傷或造成事故，損壞本機。

⚠ 警告

●廢棄本產品的投影機時，不得將屏幕部分外露放置。
▶否則，受直射陽光等的影響，將引起火災。

禁　止

●卸下投影機的屏幕部分將其廢棄時，避開直射陽光等。
▶否則，有被燒傷危險或引起火災。

禁　止

請留意

●本機的設置、操作、檢查、打掃、移動及搬運，請遵照本書所載步驟及內容進行，確保安全。

●不要揭下貼在本機上的“警告”“注意”等標簽。

●不要在相當於間接性警告或注意的狀態下，設置、操作、檢查、打掃、移動或搬運等。

●因轉讓等，本機的所有者發生變化時，務必將本書轉交給新的所有者。

●本書遺失或破損時，請惠詢當地的經銷店。

1 規　　格

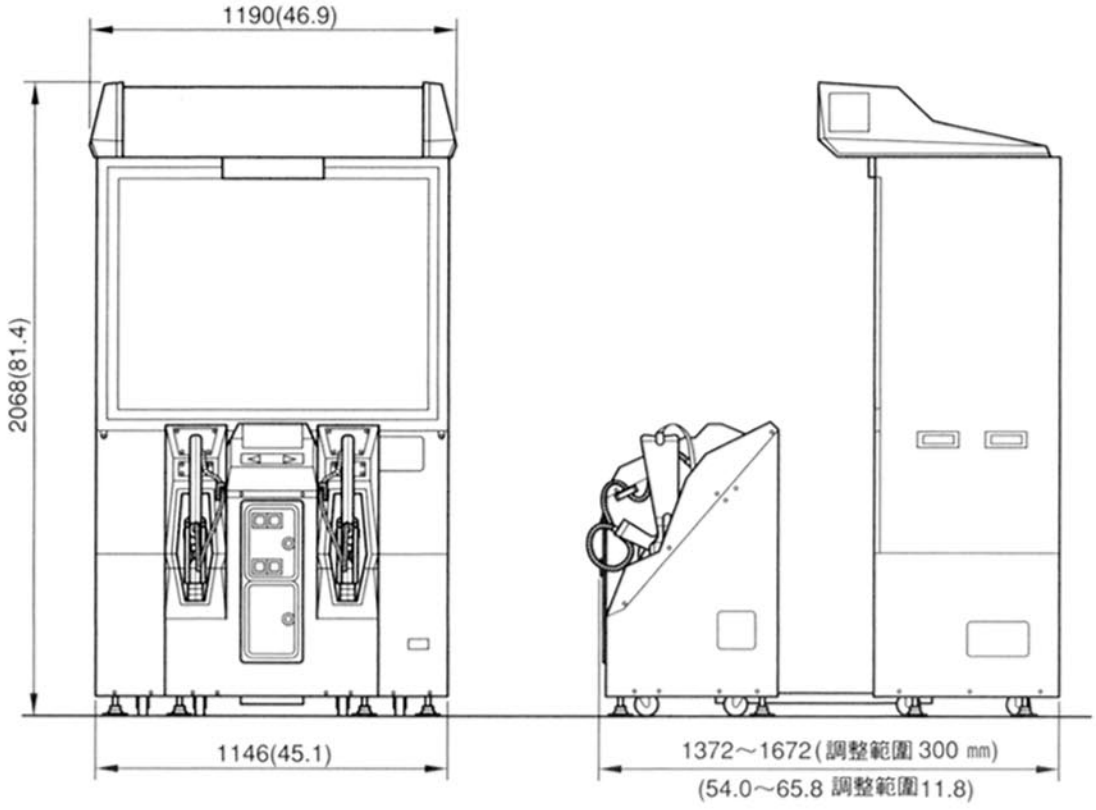

規　　格

外形尺寸	參看上圖：mm(in)
重量	263kg（580lb） 投影機：約174kg（384lb），前面單元：約72kg（159lb），標題單元：約17kg（37lb）
額定耗電量	350W
監視器	50英寸彩色投影機(15kHz/24kHz自動轉換)
使用條件	溫度10～35℃，濕度20～80%(不得結露)
附件	・使用説明書……本書 ・存幣箱鑰匙……2 ・維修用鑰匙……2 ・標題單元……1 ・連結板……1 ・連接板固定用螺栓、彈簧墊圈……各2 ・投影機調整遙控器……1 ・單4號乾電池……2 ・投影機調整遙控器用粘貼條……1 ・六角杆狀扳手(6mm)……1

●萬一有不足零件或不良零件，請惠詢當地的經銷店。
●本機的規格因性能改良等理由而變更時，恕不預告。

2 Names of parts and list of main parts

■Main machine

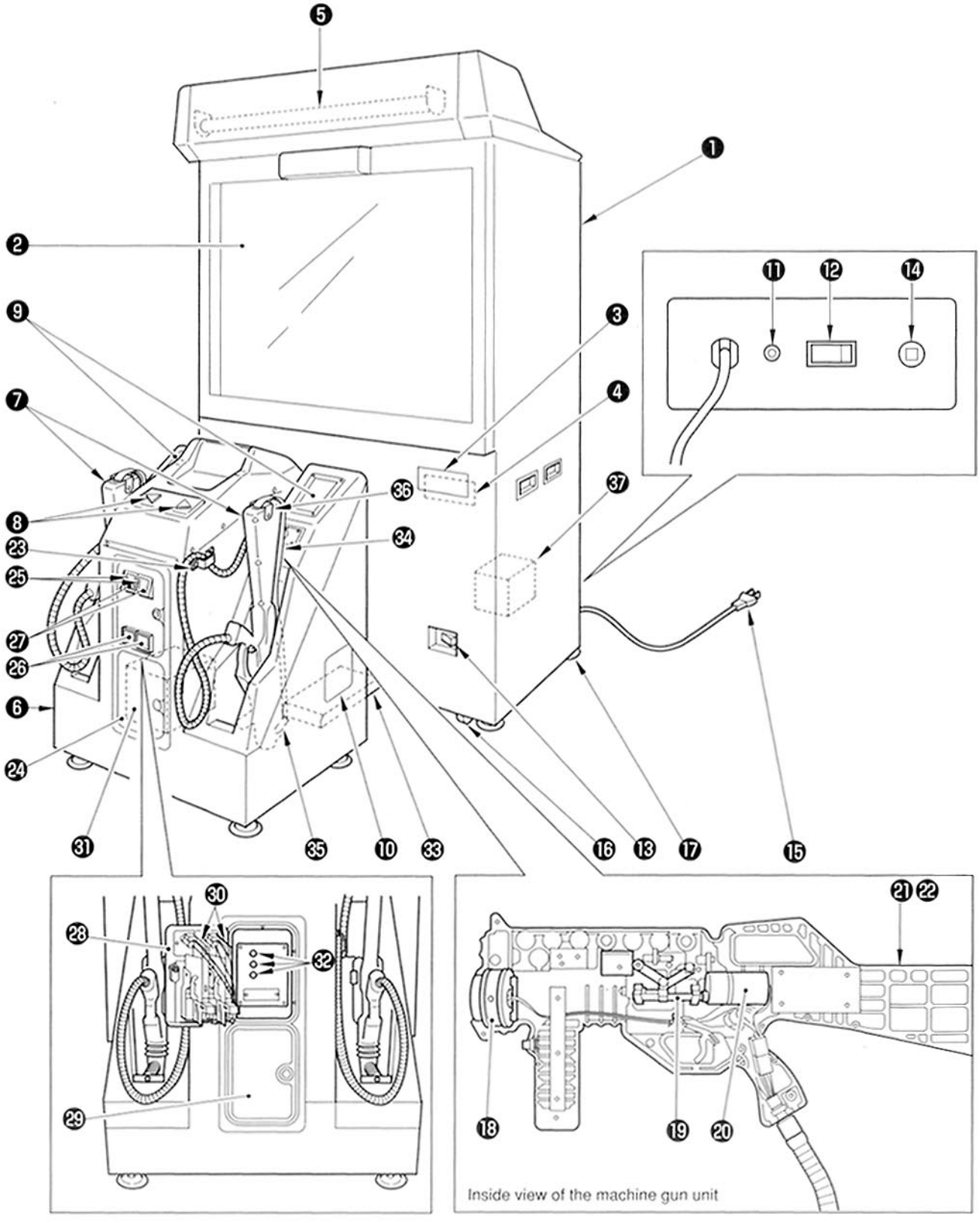

No.	Part name	Part #	Quantity	Remarks
❶	Projector unit	—	1	
❷	Projector	002243	1	
❸	Projector maintenance door	404920	1	
❹	Projector adjustment PCB	—	1	
❺	Fluorescent light unit	003192	1	
❻	Front unit	—	1	
❼	Machine gun unit	504935A	2	Include ㉞~㊱
❽	Start switch	003784	2	
❾	Speaker	002351	2	
❿	Superwoofer	003791	1	
⓫	Ground terminal	055905	1	
⓬	Power switch	003110	1	Projector back (main power)
⓭	Power switch	003110	1	Projector front
⓮	Circuit protector	002483	1	
⓯	AC power cord	053090	1	
⓰	Caster	055231	8	
⓱	Adjuster	002102	8	
⓲	CCD camera unit	003783	2	
⓳	Gun kicking unit	504987	2	Include ⓴
⓴	Machine gun motor	003782	2	
㉑	Machine gun case	303936	2	Kicking mechanism-mounted side
㉒	Machine gun case	303937	2	
㉓	Machine gun cable clamp	003794	2	
㉔	Coin door unit	000664	1	Include ㉕~㉚GN680-UC/TB/AF
		002566	1	Include ㉕~㉚GN680-HD
㉕	Coin input port	—	2	
㉖	Coin return port	—	2	
㉗	Coin return button	—	2	
㉘	Meintenance door	—	1	
㉙	Coin door	—	1	
㉚	Coin selector	—	2	
㉛	Coin box	100491	1	
㉜	Service panel switch	054337	3	
㉝	Coupler	303575	1	
㉞	Gun strap	004128	1	
㉟	Strap hook A	405444	1	At muzzle
㊱	Strap hook B	405443	1	At gun stock
㊲	Transformer	002494	1	

3 How to play

The "OPERATION THUNDER HURRICANE™" machine is designed to play machine gun shooting game alone or in a pair. The machine gun is equipped with a kicking mechanism to feel a kick of the gun.

■How to play

- Shoot the enemy soldiers, enemy weapons and buildings that appear one after the other on the screen to get as high as score possible.
- Use both the ordinary bullets and the special weapon bullets to shoot the enemies efficiently.
  - As many ordinary bullets as you like can be fired for nonstop shooting. There is no need to reload the machine gun.
  - The special weapon is limited in its bullets available. Preset the number of these bullets referring to "GAME OPTIONS" on page 24.

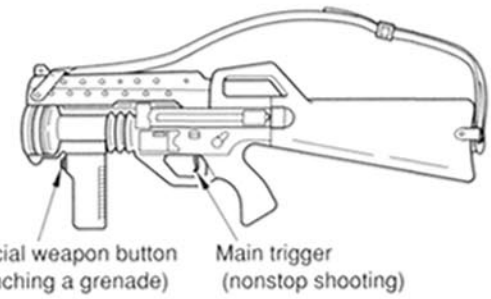

•Special weapon
Used to sweep all the bullets off the screen and to damage the enemy to a certain level. The special weapon is limited in its bullets.

1 Put a coin into the slot. Push the start button and the game starts itself.
2 The game proceeds in five stages. Each time one stage is cleared, your score at that stage is displayed.
3 When you get hit by the enemy, your life points are counted down.
4 The game is over when you have lost all of your life points.

■Joining the game halfway

- You can join the game anytime during the play.

■Putting back the machine gun

- Put the machine gun back in its specified position.

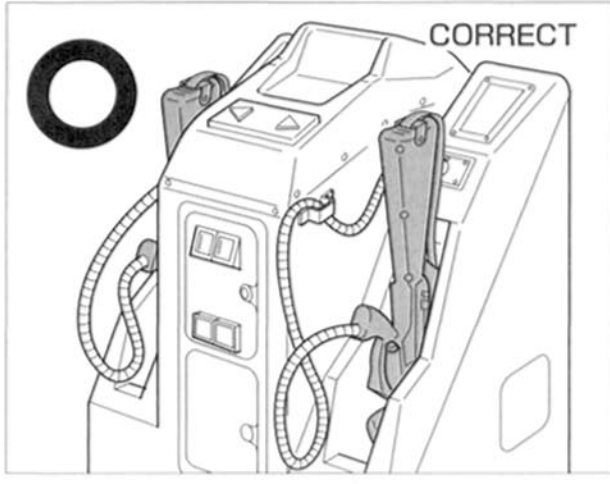

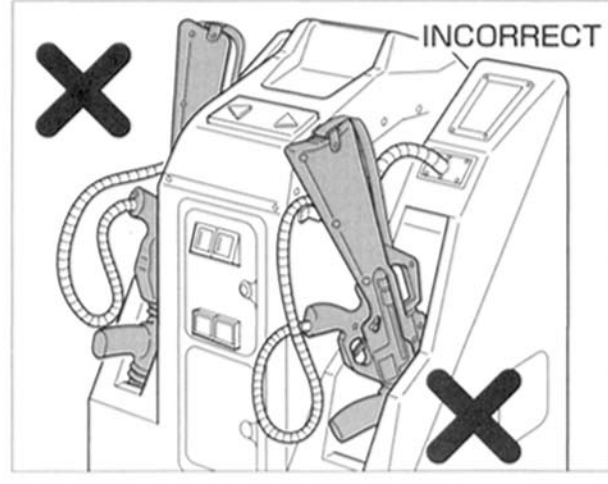

■Continuing the game

- You can continue the game if you take the procedure within about 20 seconds after the game is over.

4 Opening and closing the doors

4-1 Opening and closing the maintenance door

■How to open the maintenance door

●Take care not to apply any load or impact to the maintenance door when it is open.

1 Insert the attached maintenance key into the keyhole of the door in the upper portion of the coin door unit, and turn it clockwise.

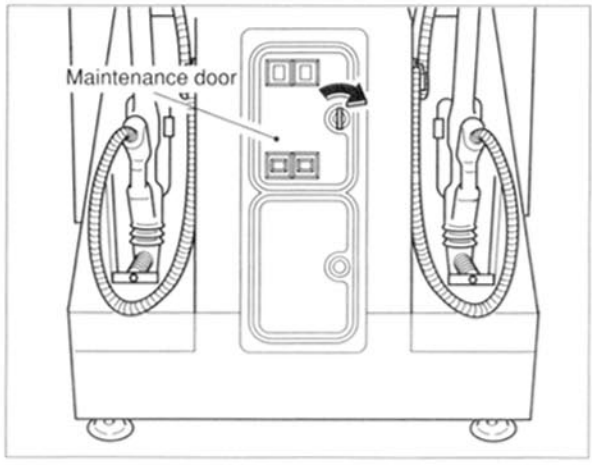

2 Open the maintenance door.

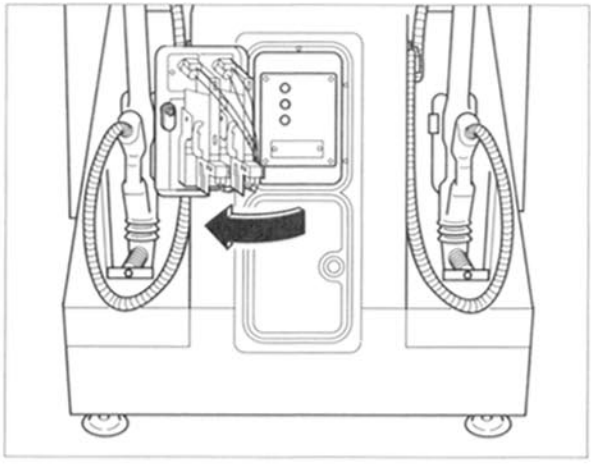

■How to close the maintenance door

1 Close the maintenance door.

2 Turn the maintenance key counterclockwise.

4-2 Opening and closing the coin door

■How to take out the coin box

- **Securely lock the door for protection against burglaries.**
- **Note that the coin box is considerably heavy to take out if it is full of coins.**

1 Insert the attached coin box key in the coin box door and turn it clockwise.

2 Open the coin door and take out the coin box .

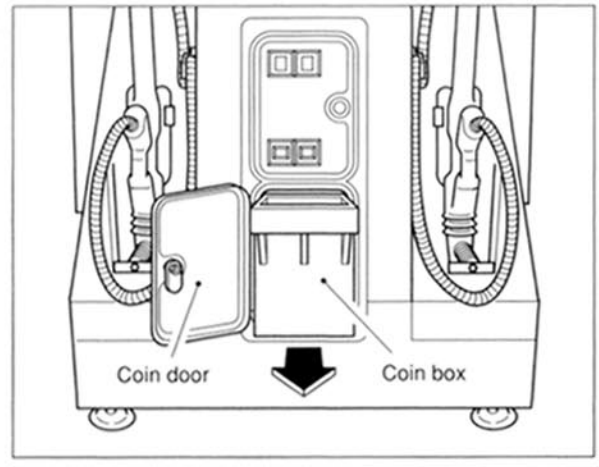

■Coin counter

You will find the coin box when the coin door is opened. The coin counter is located under the coin box.

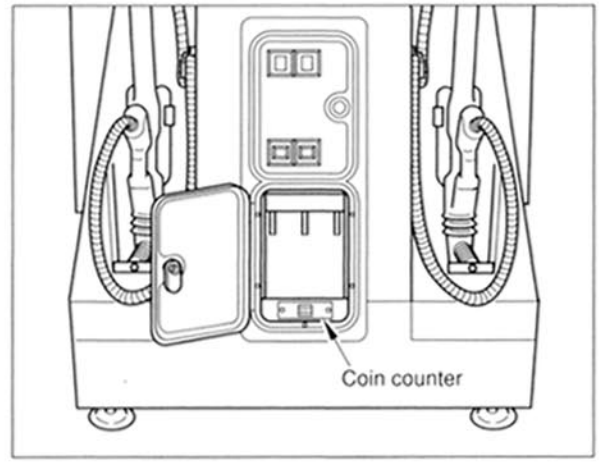

5 PCB settings

5-1 PCB start-up check (self test)

■When the power switch is turned ON after the installation of machine, the performance of game Printed Circuit Boards (PCB) is checked automatically and the result is displayed on the screen.

- **Be sure to perform the self test before using the machine. If an abnormality persists or the machine does not operate properly, turn OFF the main power switch immediately to stop operating the machine.**
- **When the machine has been set up or the game PCB or the machine gun has been repaired or replaced, be sure to make the "GUN SETTINGS" referring to page 23.**
- **When the settings have been brought back to the factory ones, be sure to make the "GUN SETTINGS" referring to page 23.**

■Result of test

If test is OK

- The machine goes to the game mode and the demonstration game gets started.

If any abnormality is detected

- "BAD" appears on the screen, and the checking is repeated.
  If "EEPROM BAD (24G)" is displayed, once turn OFF the power switch and then turn it ON again while depressing the test switch button on the service panel. (The content of setting in manual test return to those having been set at the time of shipment.)

- If "GUN I/F ERROR" appears on the screen and the machine stops, the game PCB may be in trouble.

  If the machine still fails to display properly or to get started, immediately turn OFF the main power switch and contact your nearest dealer.

5-2 Adjusting the game environment (manual test)

Manually check and change the settings for the screen displays and game contents.

■Starting the manual test mode

1 Turn ON the power switch.
2 While the demonstration game is playing, push the test switch on the service panel. (Do not turn ON the power switch with the test switch held down. The current settings will be erased and the machine will have the factory settings.)

■Quit the manual test mode

1 Push the 1P or 2P start button to select "GAME MODE" on the main menu.
2 Pull the main trigger of the 1P machine gun.
・The screen goes back to the game mode.

■Main mode screen (basic items)

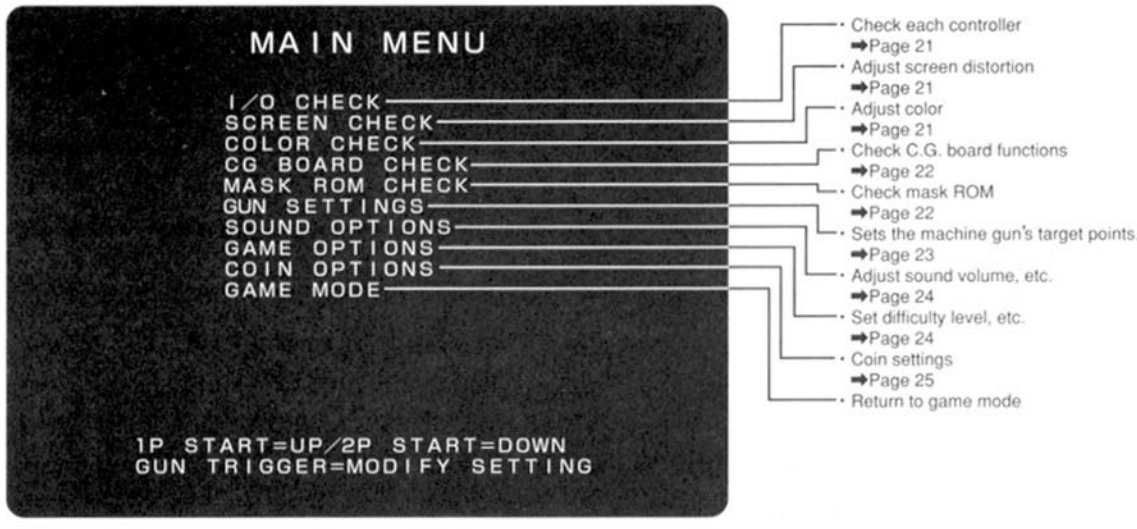

■Selecting each mode

How to select each mode from the menu

・SELECT ➡ Push the 1P or 2P start button to select an item.

・SET ➡ Pull the main trigger of the 1P machine gun.

5-3 Mode descriptions

■The original factory settings are displayed in green; the changed settings are displayed in red.

- After the settings have been changed, select the "SAVE AND EXIT" and pull the main trigger of the 1P machine gun. The new settings are saved automatically and the screen returns to the main menu.
- If "EXIT" is selected after the settings have been changed, the message "YOU DID NOT SAVE, DO YOU WANT TO SAVE? YES/NO" will appear. Using the 1P or 2P start button, select "YES" or "NO" and pull the main trigger of the 1P machine gun. If "YES" is selected, the message "NOW SAVING" will appear, the modified settings will be saved, and the screen will return to the main menu. If "NO" is selected, the message "NO MODIFICATION" will appear and the modified settings will not be saved.

- If "FACTORY SETTINGS" is selected and the main trigger of the 1P machine gun is pulled, all the settings will return to the factory settings.

MEMO

I/O CHECK

Checking the controls

■Mode for checking the performance of each control.
To return to the main menu screen, push the 1P and 2P start buttons at once. When testing the machine gun motor, be sure to hold the machine gun ready. If not, this checking may fail.

SCREEN CHECK

Adjusting the screen distortion

■Mode for checking the screen display.
Adjust the focus, distortion and size of the screen while watching the crosshatch pattern. Use the projector adjustment PCB (see page 40) to make the adjustment. To return to the main menu, push the 1P or 2P start button.

COLOR CHECK

Adjusting the display color

■Mode for checking the display color.
Make the adjustment using the projector adjustment PCB (see page 40) so that the colors of the color bars should appear properly graduated. To return to the main menu, push the 1P or 2P start button.

CG BOARD CHECK

Checking the CG board function

■Mode for checking the function of the CG board.
Observe the screen in this mode to make sure that the CG board is functioning well. To return to the main menu, push the 1P or 2P start button.

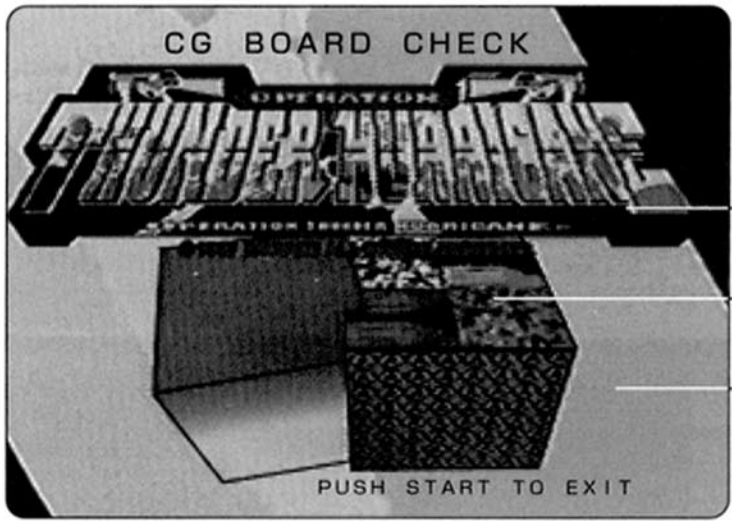

- The "OPERATION THUNDER HURRICANE" logo is shown before the cubes.
- Two cubes are rotating and entangled with each other.
- The background shown behind the cubes is turning.

MASK ROM CHECK

Checking the mask ROMs

■The mask ROMs are checked one by one. If the ROM is not in trouble, "OK" is displayed. If anything unusual is found, "BAD" appears. Once in this mode, this checking gets started automatically. To return to the main menu, push the 1P or 2P start button.

- If "BAD" appears, immediately turn OFF the main power switch and contact your nearest dealer.

GUN SETTINGS

Positioning the target points

■Mode for checking the shooting target positions. To return to the main menu, push the 1P or 2P start button.

- Positioning the target points
  1 Hold the 1P machine gun and stand in front of the projector. Get the gun ready (see page 26). Pull the main trigger, aiming at the center of the screen. (The target point, if out of position, will be automatically set to the center of the target on the screen.)
  2 Make sure the red marker for the 1P machine gun goes to the center of the screen.
  3 Take the same steps for the 2P machine gun.
  4 When the target points have been repositioned, select "YES" or "NO" using the 1P or 2P start button. Finally pull the main trigger of the 1P machine gun.

●Do not pull the main trigger of the machine gun just after the setting has been made. The target point will be repositioned again.

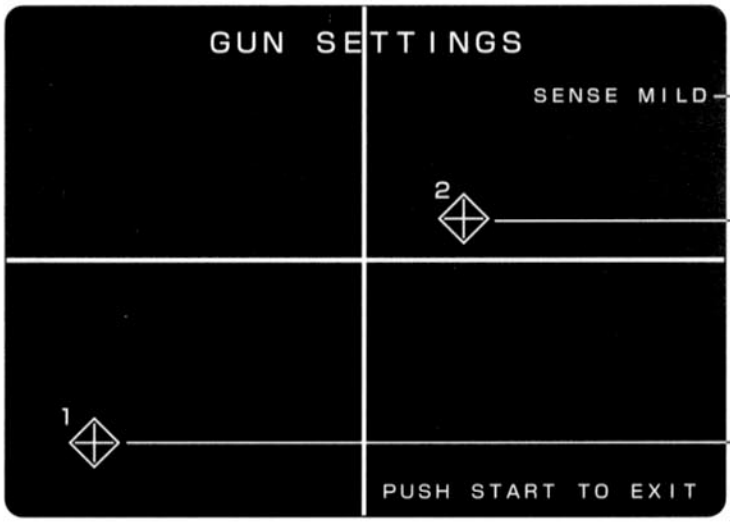

- Sets the sensitivity level. Use the special weapon button of the 1P machine gun. Keep the sensitivity usually at the "MILD" level.
- 2P marker (green)
  Sets the target point of the 2P machine gun.
- 1P marker (red)
  Sets the target point of the 1P machine gun.

SOUND OPTIONS

Adjusting the sound volume

■In this mode, the following appears on the screen. To return to the main menu, select "SAVE & EXIT" or "EXIT" and pull the main trigger of the 1P machine gun.

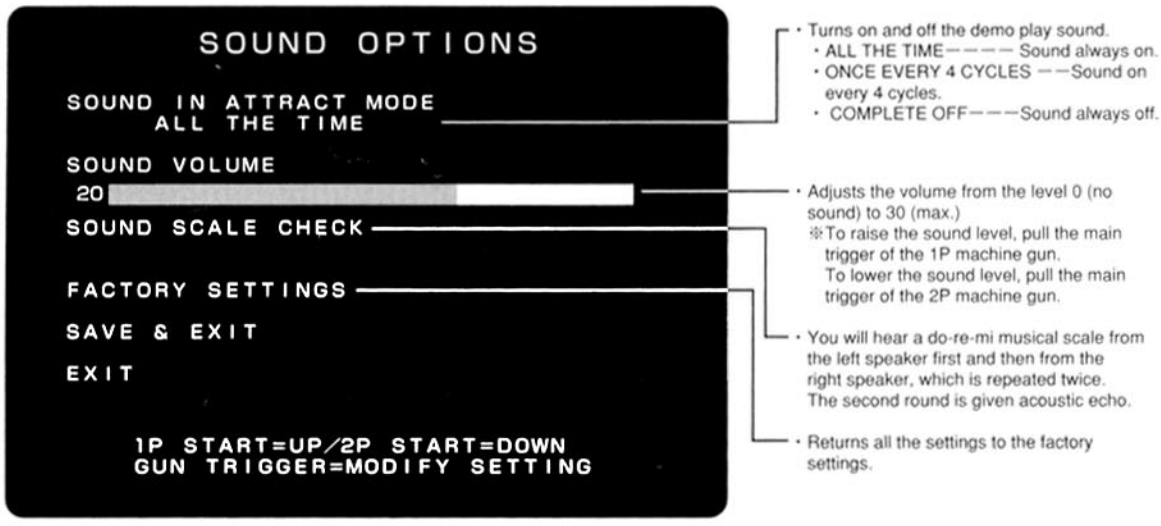

GAME OPTIONS

Setting the game options

■In this mode, the following appears on the screen. To return to the main menu, select "SAVE & EXIT" or "EXIT" and pull the main trigger of the 1P machine gun.

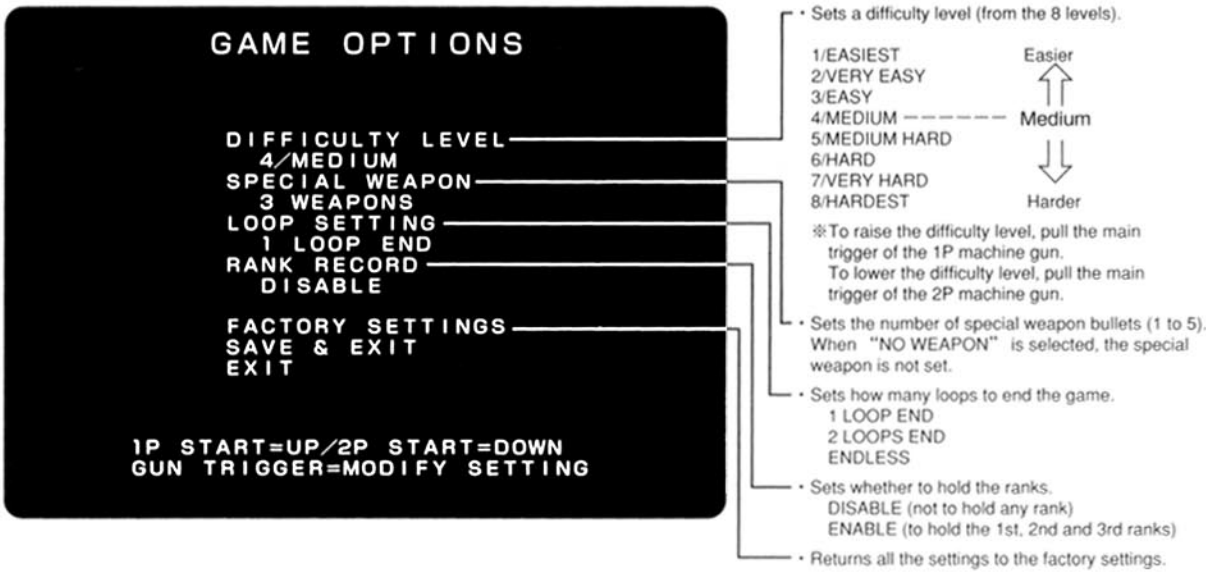

COIN OPTIONS

Setting the coin options

■In this mode, the following appears on the screen. To return to the main menu, select "SAVE & EXIT" or "EXIT" and pull the main trigger of the 1P machine gun.

●Note that the coin setting options are not displayed when FREE PLAY is set to "YES".

```
COIN OPTIONS

FREE PLAY              NO
COIN MECHANISM         INDEPENDENT
COIN SLOTS           1COIN 1CREDIT

START                  3CREDITS
CONTINUE               2CREDITS

FACTORY SETTINGS
SAVE & EXIT
EXIT

1P START=UP/2P START=DOWN
GUN TRIGGER=MODIFY SETTING
```

- Always keep this at "INDEPENDENT".
- Sets the relation between the number of coins and the number of credits.
- Sets the number of credits (1 to 9) required to start the game.
- Sets the number of credits (1 to 16) required to continue the game.
- Returns all the settings to the factory settings.

6 Setting up the game machine

6-1 Machine gun's shooting range

■Setup environment for the machine

Be very careful not to set up the machine in any of the following ambient conditions. In such environment, the machine gun may fail to hit the targets or malfunction.

- **The muzzle filter is exposed to direct sunlight.**
- **The muzzle filter receives the light reflected from a window or mirror.**
- **The muzzle filter is exposed directly to the light from a light source such as strong spotlight.**

■Machine gun's shooting range

When the machine has been set up, make the "GUN SETTINGS" referring to page 23.
With the machine gun being carried under the arm, adjust the distance between the muzzle and the projector screen to 1 m(39.4in) or so.

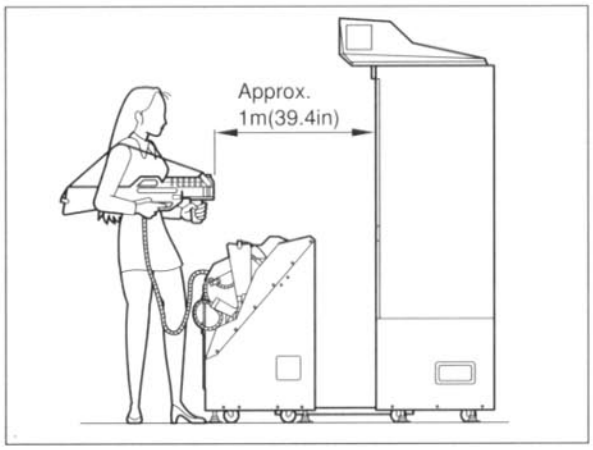

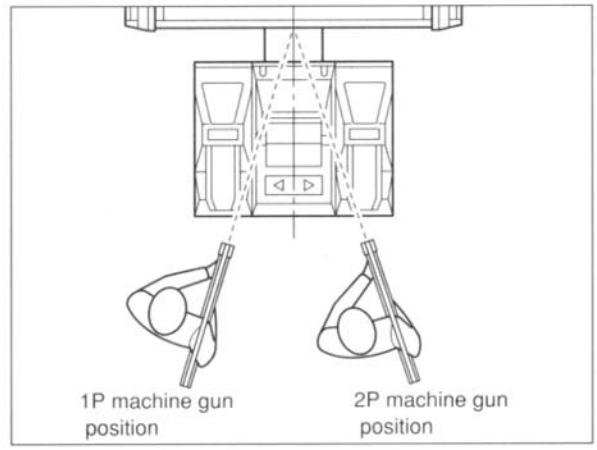

■Stain on the muzzle

If the muzzle filter is scratched or stained, the machine gun may fail to shoot the targets or malfunction. Check and clean up the filter at regular intervals.

Machine gun care

- Wipe the machine gun clean with soft cloth. Soak the cloth in neutral detergent and squeeze it enough.
- Do not use any thinner and other organic solvents. The machine gun surface may be deteriorated.
- Allow no water to come into the machine gun. An electric shock or trouble may result.

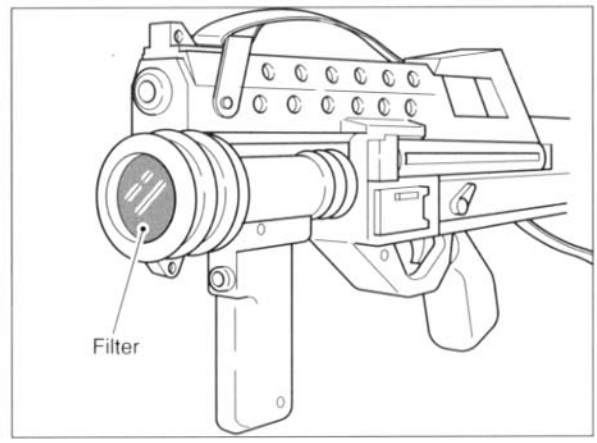

6-2 Connecting the units

■How to connect the units

- ●If the machine with all the units coupled must be moved to another place, be careful to keep the machine's connections free from undue force.
- ●Once the units have been interconnected, never roll the machine along over a rugged floor.

1 Remove the front door of the projector unit.

2 Insert the accompanying coupler into the coupler fixture at the bottom of the projector. Align the "0" marking on the coupler with the front of the projector.

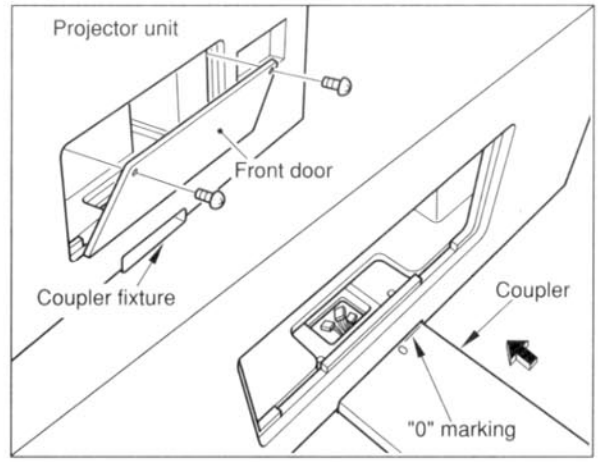

3 Using the accompanying hex wrench, tighten up the accompanying 2 coupler lock bolts to fix the coupler.

4 Draw the 3 connectors out of the coupler and connect them tightly in position.

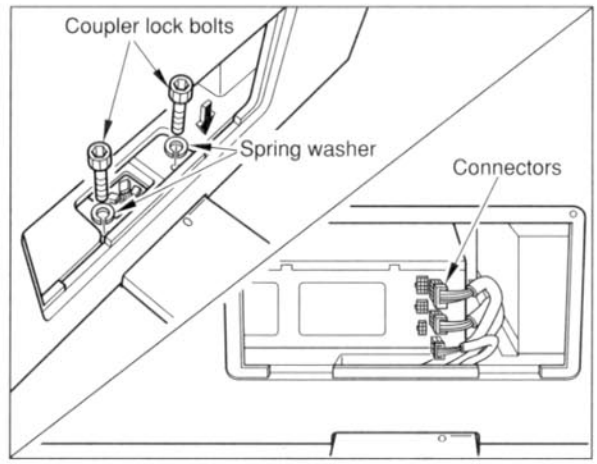

5 Remove the back door or the side door of the front unit.

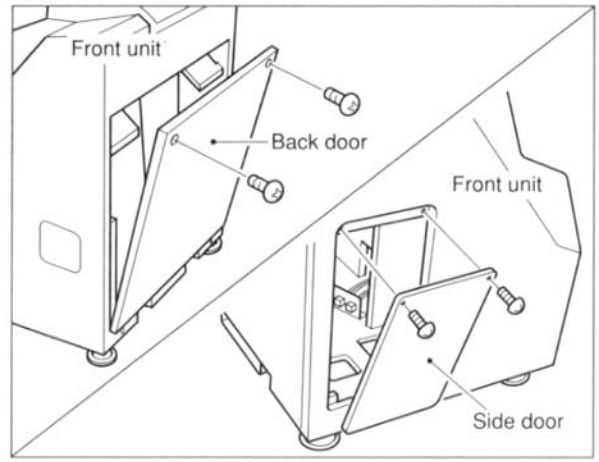

6 Using the accompanying hex wrench, loosen the bolts (shown at right) at the bottom of the front unit by 5 turns or so. Insert the coupler into the coupler fixture at the bottom of the front unit.

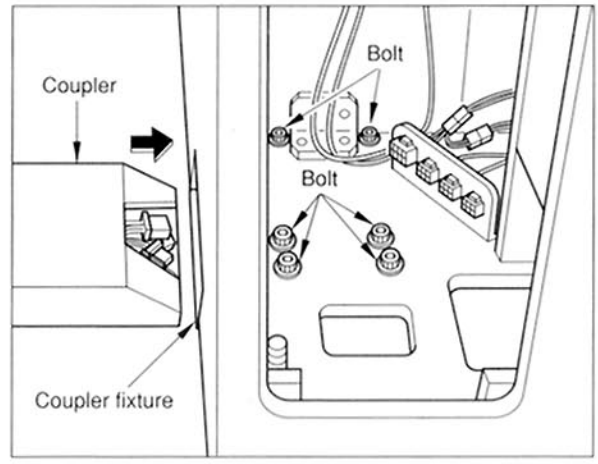

- Be careful not to loosen the bolts too much. The coupler fixture may come off position.

MEMO

7 Draw out the 4 connectors through the square opening.

8 Connect the connectors. Do not confuse the signal lines.

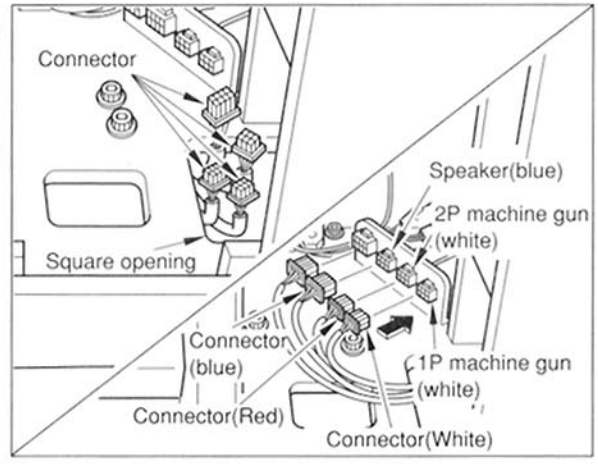

- The 1P and 2P machine gun connectors are just the same in type and color.
- Make the following pairs referring to the connector colors.
  - **1P machine gun**
    White connector / White connector
  - **2P machine gun**
    Red connector / White connector

MEMO

9 Looking at the scale on the coupler, adjust the distance between the front unit and the projector unit. Tighten up the above 6 loose bolts to secure the coupler.

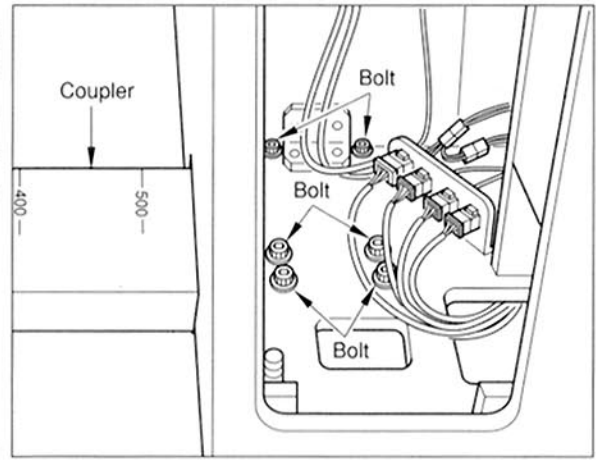

- This unit-to-unit distance cannot be shorter than 200 mm(7.9in).

MEMO

10 Place and fix the front door of the projector unit as well as the back (or side) door of the front unit.

11 Lock the adjusters, referring to "6-3 Fastening the adjusters" on page 30.

■How to set up the billboard

- **Before setting up the billboard, be sure to lock the adjusters to fix the units. (Refer to "6-3 Fastening the adjusters" on page 30.)**
- **Install the billbord with 2 or more people by using a stool.**

1 Remove the connector from the billboard bottom surface.

2 Remove the title unit locking screws (4 pcs.) from the top surface of the projector unit.

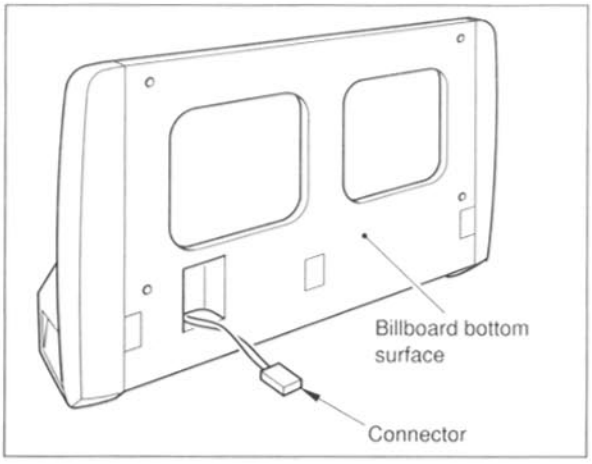

3 Lift the billboard and connect the connector to the projector unit side. Fasten the billboard with the screws removed in step 10, being careful not to catch the bound wires.

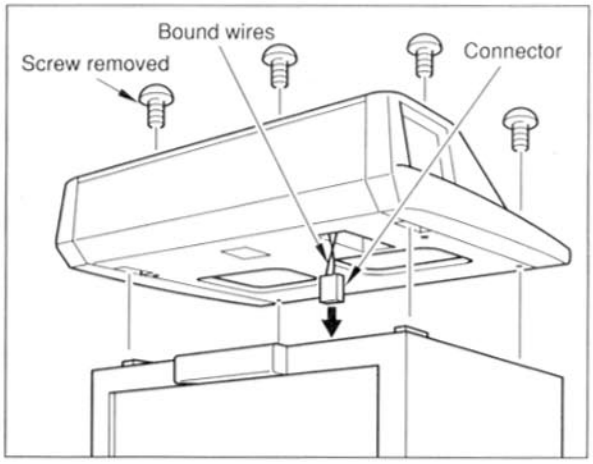

6-3 Fastening the adjusters

■How to fasten the adjusters

- **Adjust the adjusters so that the casters do not touch the floor. Take care not to exceed the maximum adjusting height of the adjuster.**
- **Make sure the 8 adjusters are evenly on the floor and that the machine is stable. Tighten up the hex nuts upward.**

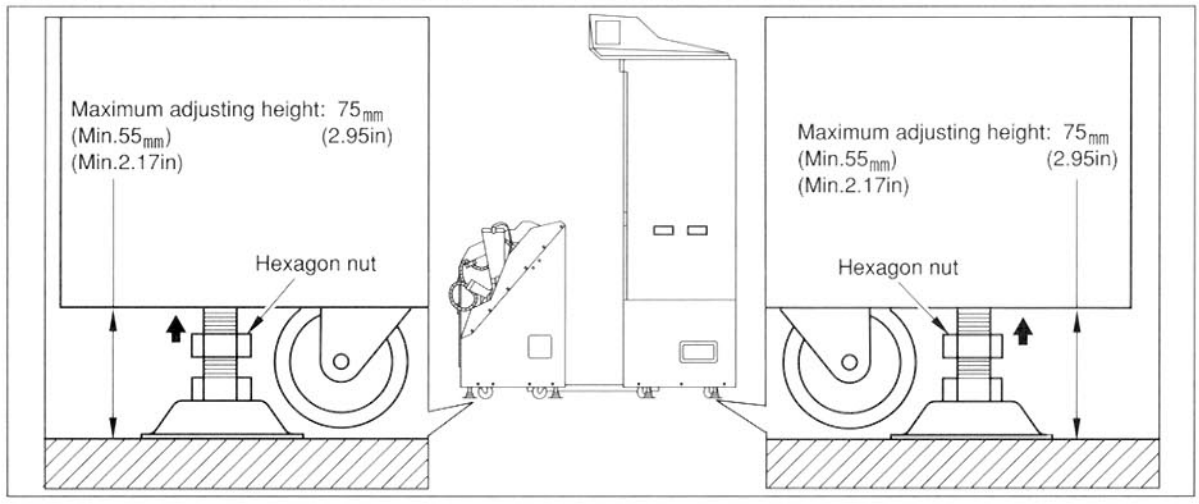

6-4 AC bracket

■AC bracket

The AC bracket (with the main power switch) is located on the back of the projector unit. The sub-power switch is situated on the front of the projector unit.

- **Before opening the back door or the side door, be sure to turn OFF the sub-power switch on the projector front first and then the main power switch on the AC bracket. If the sub-power switch is OFF but the main power switch is ON, some internal parts are still energized.**

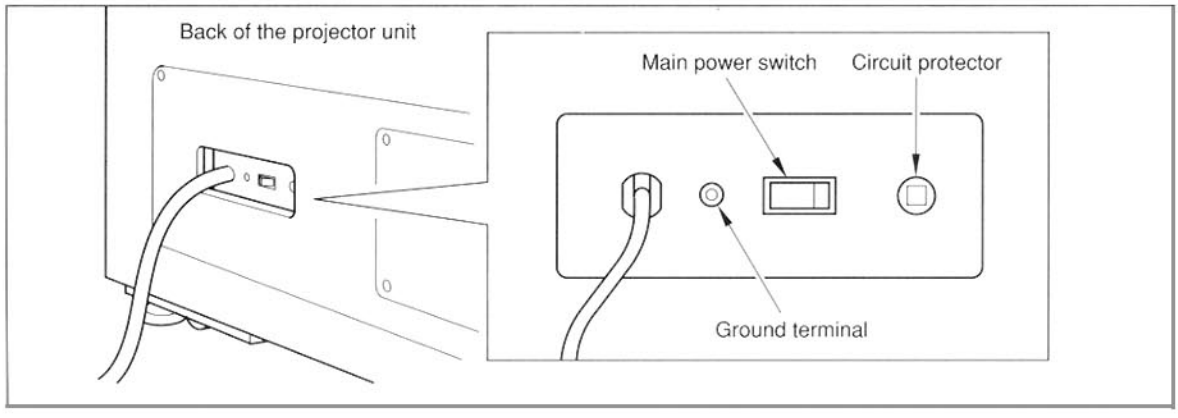

6-5 Service panel

■Service panel

You will find the service panel when the maintenance door is opened with the attached maintenance key.

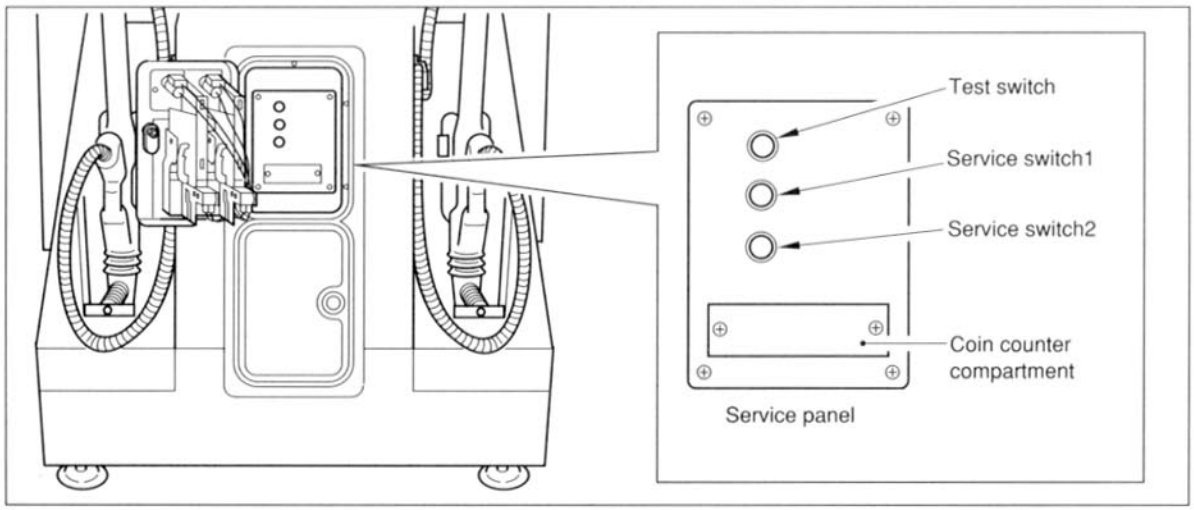

6-6 Separating and moving the units

■How to remove the units

The machine can be divided into the units.

- Before rolling the machine along on a rugged floor, be sure to divide the machine into the units.
- Before separating the units from the machine, be sure to turn OFF the main power switch and remove the power cord plug from the receptacle.
- Before moving the machine, be sure to separate the front unit, the projector unit and the coupler and to disconnect all the connectors.
- Separate the billboard from the projector unit, when needed, before loosening the adjusters.
- Before moving the machine, fully raise the 8 adjusters and roll the machine on the casters.
- When connecting the separated units, take care not to catch the wiring and your hand between the units.

1 Turn OFF the main power switch and remove the power cord plug from the receptacle.

2 Take the reverse procedure to separate the front unit and the projector unit.

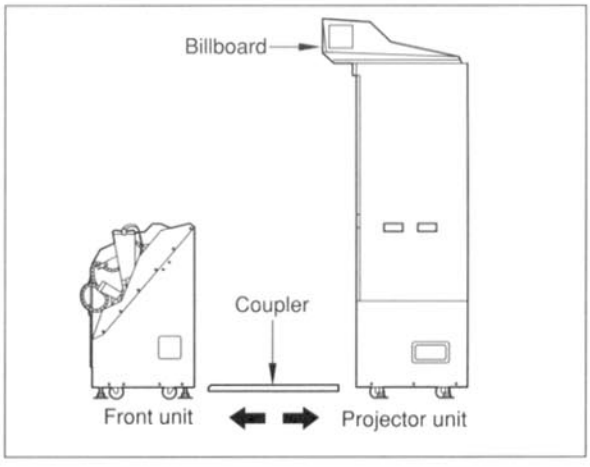

3 Loosen the 8 adjusters and move the units on the casters. If the billboard must be detached too, take it away before loosening the adjusters.

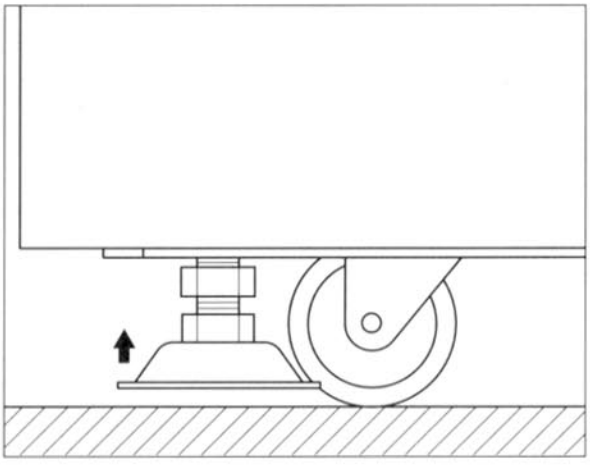

6-7 Moving the coin counter

■How to move the coin counter

The coin counter was installed in the coin box when the machine left the factory, but it can be moved onto the service panel.

●Turn OFF the main power switch and unplug the power cord from the receptacle before moving the coin counter.

1 Remove the back door or the side door of the front unit. (See page 27.)

2 Open the coin door, remove the coin counter lock screws, and take out the coin counter.

3 Disconnect the coin counter connector.

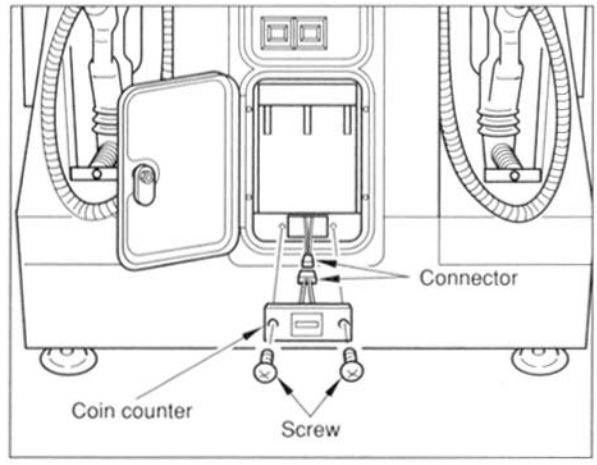

4 Open the maintenance door and unscrew the blind cover to remove it from the service panel.

5 Fit and fix the coin counter on the service panel with the screws.

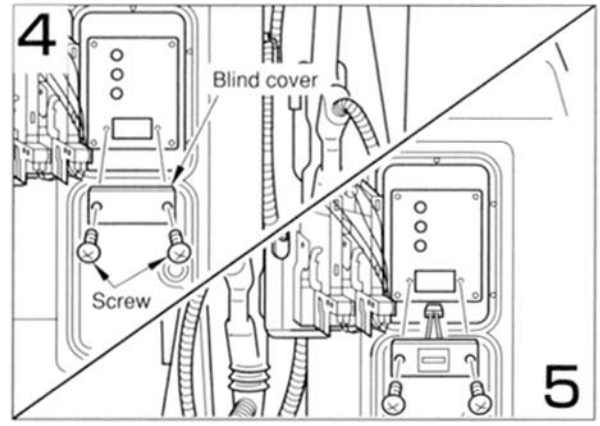

6 Reconnect the coin counter connector to the original connector.

7 Install the blind cover in the coin counter hole inside the coin box.

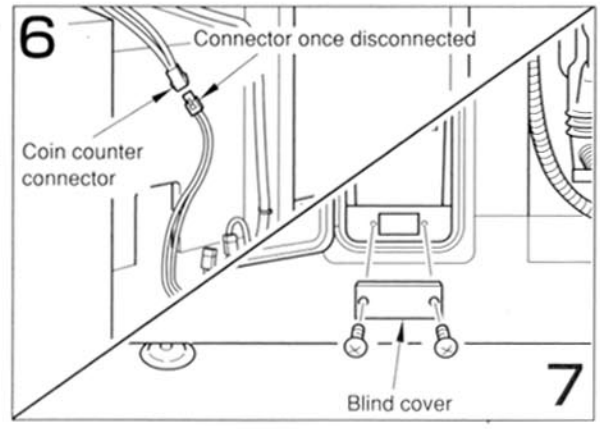

7 Maintenance and annex

7-1 Replacing the coin selector

●Be sure to turn OFF the main power switch and remove the power cord plug from the receptacle before replacing the coin selector.

1 Open the maintenance door.

2 Remove the bolts (2 each) off the coin selectors. Slide the coin selectors to the right to taken them out. See the sketch at right.

3 When mounting the coin selector, push up the lever and follow the procedure in the reverse order.

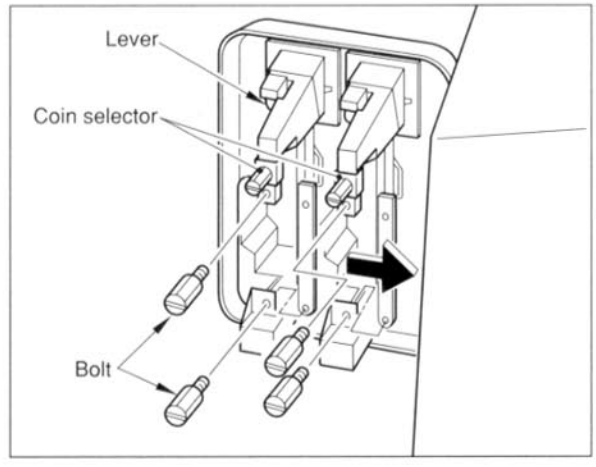

7-2 Replacing the fluorescent light

- **Be sure to turn OFF the main power switch and remove the power cord plug from the receptacle before replacing the fluorescent light.**
- **The fluorescent light is hot just after it is put off. Wait until it cools down and then replace it with a new one of the same type (straight tube 32 W/100V).**
- **When removing or installing the fluorescent light unit, take care not to catch the wiring between the fluorescent light unit and the main unit.**

1 Remove the fluorescent light unit lock screws off the top of the billboard.

2 Lift the fluorescent light unit off position. Be careful not to hit against the ballast.

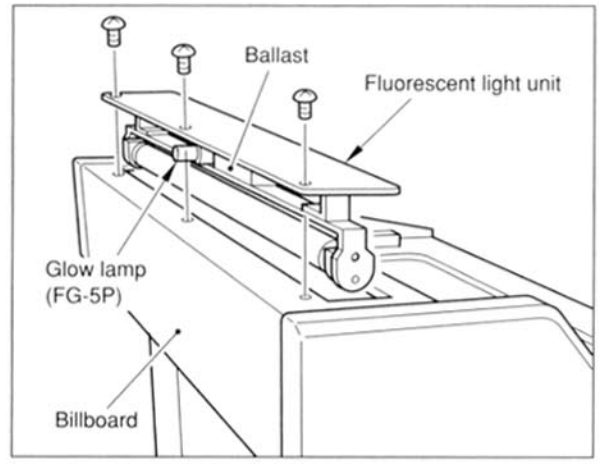

3 Push one end of the fluorescent light in the direction of the socket. The other end of the fluorescent light will be detached from the opposite socket.

4 Install a new fluorescent light in the reverse order.

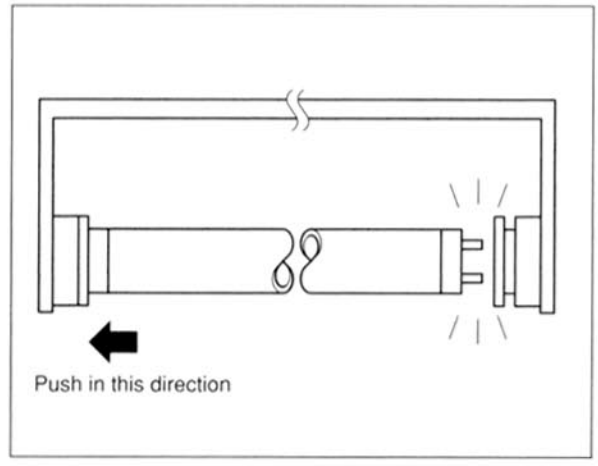

- It is recommended that the glow lamp should be also replaced.

MEMO

7-3 Replacing the push-button

■How to replace the push-button

●Be sure to turn OFF the main power switch and remove the power cord plug from the receptacle before replacing the push-button.

1 Open the maintenance door. (See page 17.)

2 Put your hand inside through the opening. Pull out the socket, loosen the nut and remove the push-button.

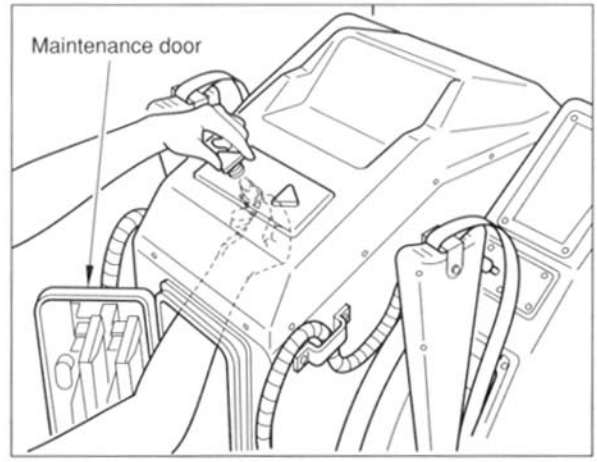

3 Take the reverse procedure to fit a new push-button.

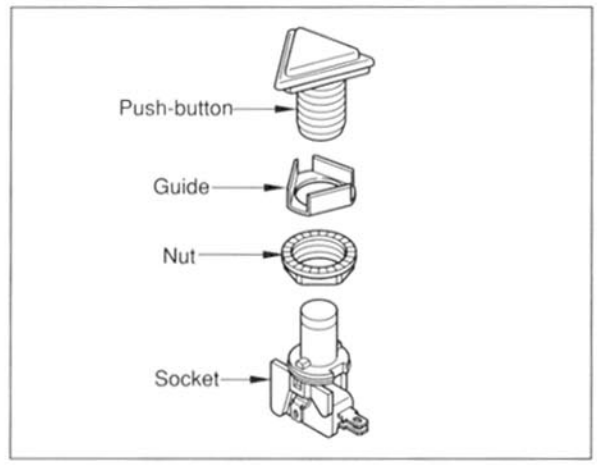

7-4 Replacing the machine gun unit

■How to replace the machine gun unit

●Be sure to turn OFF the main power switch and remove the power cord plug from the receptacle before replacing the machine gun unit.

1 Remove the back door of the front unit. (See page 27.)

2 Undo the clamp that holds the leads coming from the machine gun unit. Disconnect the connectors shown at right.

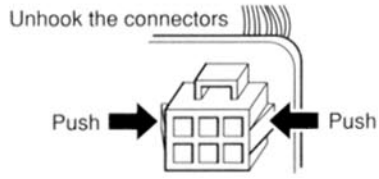

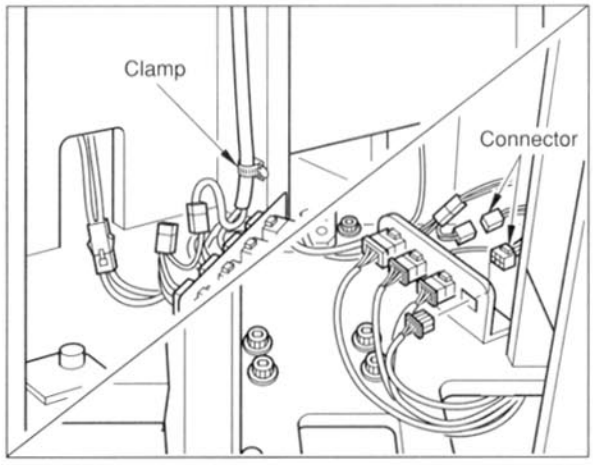

3 Remove the clamp screws and the bracket screws. Now the machine gun unit cord is free of the clamp.

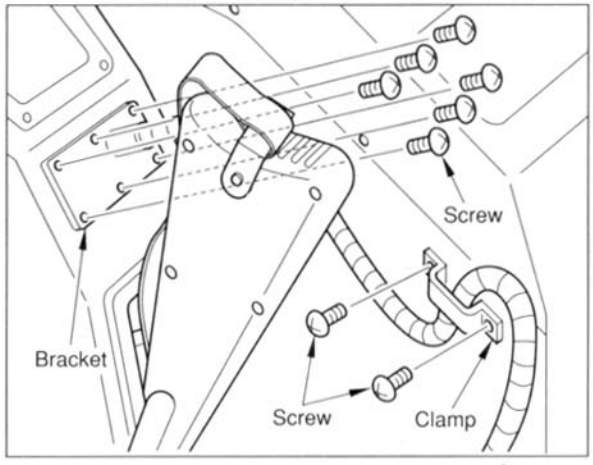

4 Take out the machine gun unit together with the bracket.

5 Take the reverse procedure to fit the machine gun unit back in position. Be careful not to confuse the 1P and 2P connectors.

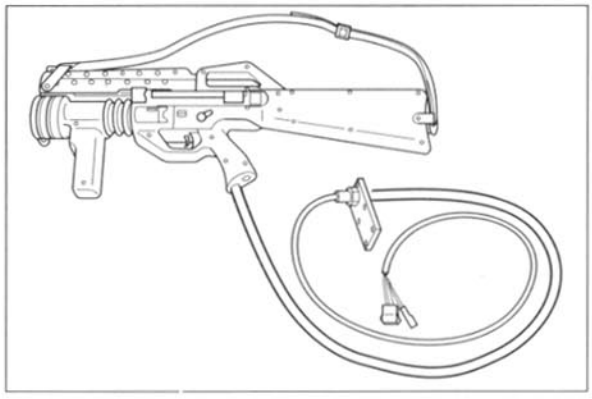

6 Make the "GUN SETTINGS" referring to pages 20 and 23.

■How to replace the machine gun's kicking mechanism

●Be sure to turn OFF the main power switch and remove the power cord plug from the receptacle before replacing the machine gun's kicking mechanism.

1 Remove the 25 screws. Detach the strap hooks and the machine gun case.

Ⓐ M3×8L
Ⓑ M3×20L
Ⓒ M3×25L
Ⓓ M3×30L
Ⓔ M3×45L
Ⓕ M3×60L
Ⓖ M4×15L

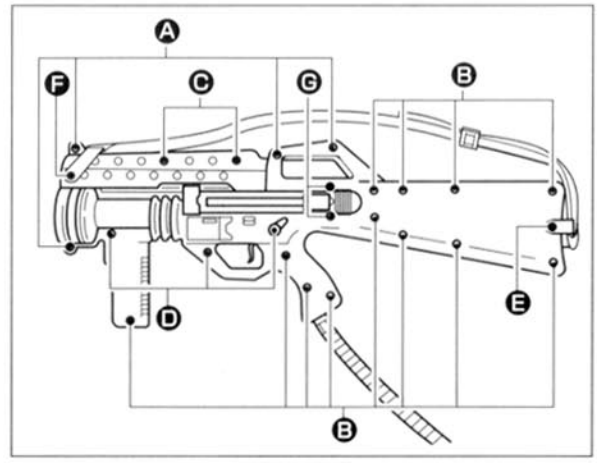

2 Disconnect the connector (shown at right) and the ground wire.

3 Remove the 2 screws off the kicking mechanism.

4 Take the reverse procedure to reassemble the machine gun. Be careful not to get the leads caught.

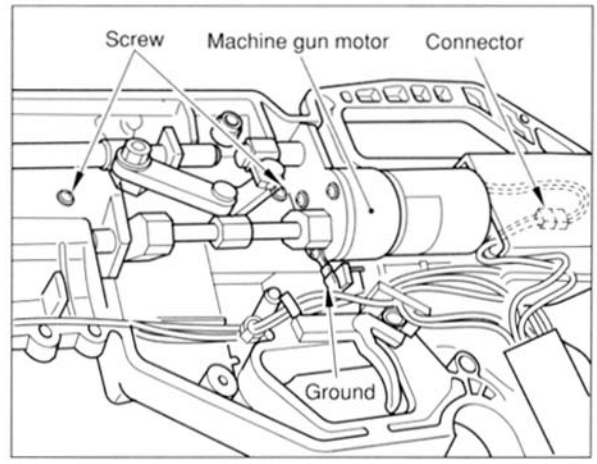

■How to replace the CCD camera

●Be sure to turn OFF the main power switch and remove the power cord plug from the receptacle before replacing the CCD camera.

1 Remove the 24 screws. Detach the strap hooks and the machine gun case.(See page 38.)

2 Take the CCD camera unit out of the machine gun.

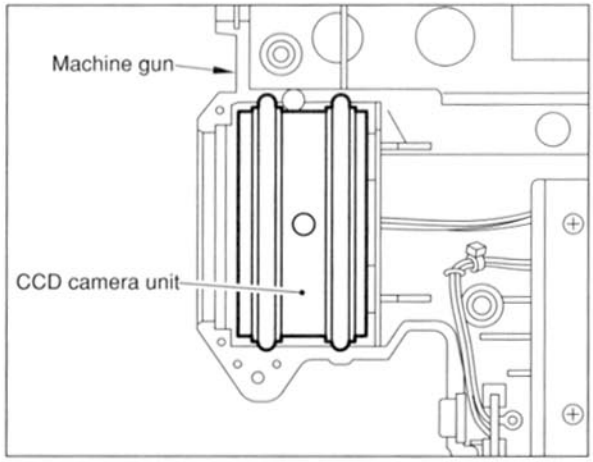

3 Disconnect the connector from the CCD camera unit.

4 Remove the 4 screws off the CCD camera. Detach the CCD camera.

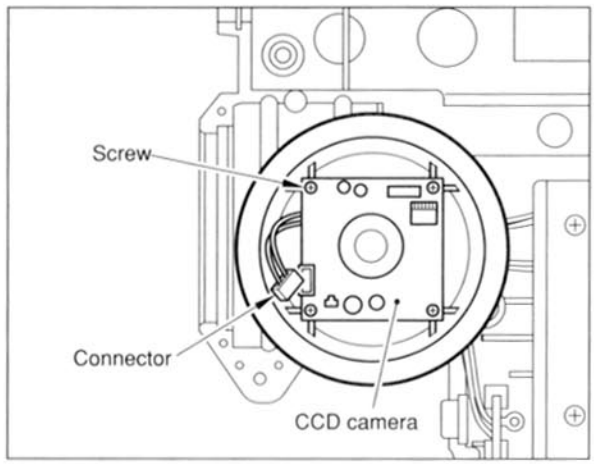

5 Place and fix a new CCD camera tilted upward as shown at right. (When viewed from the muzzle, the connector must be on the left.)

6 Fit the CCD camera unit (with the new CCD camera in place) in position in the reverse order. Be careful not to get the leads caught.

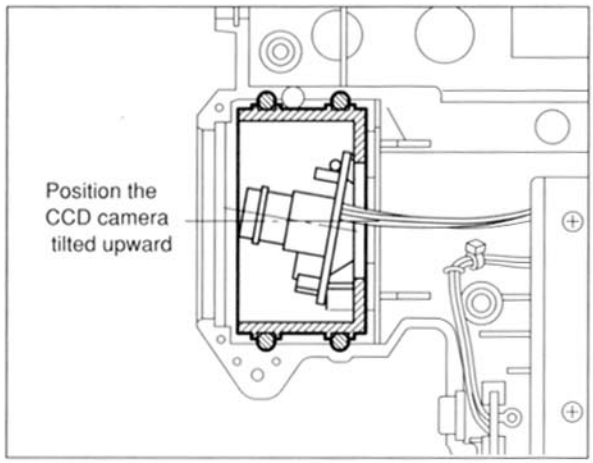

7 Make the "GUN SETTINGS" referring to pages 20 and 23.

7-5 Adjusting the projector

The projector has already been adjusted at the time of shipment, but it may be readjust as desired.

●The interior of the projector contains high voltage electricity, so take great care not to touch it.

■Projector adjustment PCB

The projector adjustment PCB is located inside the projector maintenance door of the projector unit. (Remove the screws and open the panel.)

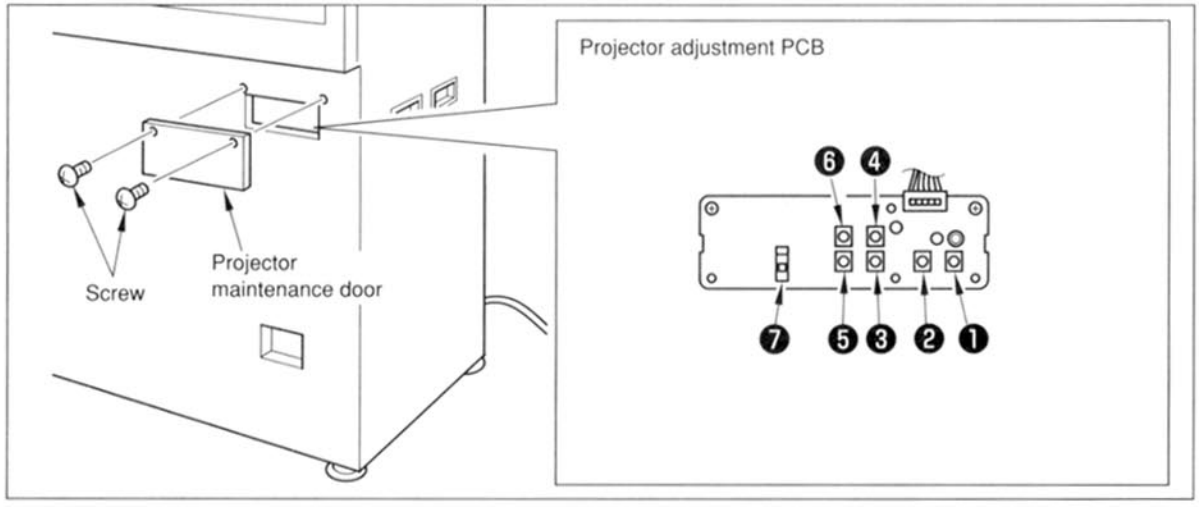

❶	CONTRAST	**Contrast adjustment** Used to change the contrast.
❷	BRIGHT	**Brightness adjustment** Used to change the brightness. Turning it clockwise will make the image brighter.
❸	H.POSI	**Horizontal screen position adjustment** Used to change the raster position in the horizontal direction.
❹	V.POSI	**Vertical screen position adjustment** Used to change the raster position in the vertical direction.
❺	H.SIZE	**Horizontal screen size adjustment** Used to change the width of the screen.
❻	V.SIZE	**Vertical screen size adjustment** Used to change the height of the screen.
❼	CONV.ADJ. (CONVERGENCE)	**Convergence adjustment** Used to adjust misconvergence caused by the earth's magnetic field, etc. (Be sure to keep this off when not adjusting.) Refer to page 41 for the adjusting method.

When the game machine is moved to another location or reoriented, screen color distortion can occur due to magnetism from objects near the game machine or from the earth's magnetic field. If screen color distortion occurs uniformly across the whole screen, adjust convergence in the following way.

■How to adjust convergence

- **Be sure to keep the [CONV.ADJ.] switch OFF when not adjusting. After the completion of adjustment, check that the [CONV.ADJ.] switch is turned OFF.**
- **When using the remote control, keep it within a 30° angle to the top, bottom, left and right of the center of the screen and stand no further than 3 meters(118inches) away from the screen.**
- **When the [RESET] key is pushed during adjustment, setting to the status before adjustment is performed.**
- **When the screen is disturbed by static electricity etc. during the adjustment of the unit, turn OFF the power switch and on again, and readjust the unit.**
- **If the remote control does not work properly, replace the batteries with new ones. If the remote control is not to be used for a long time, remove the batteries from the remote control. Failure to do so could cause liquid leakage.**

1 Turn ON the [CONV.ADJ.] switch on the projector adjustment PCB.

2 Point the remote control at the screen and push the [TEST] key for about 3 seconds.
(A green cross pattern appears on the screen.)

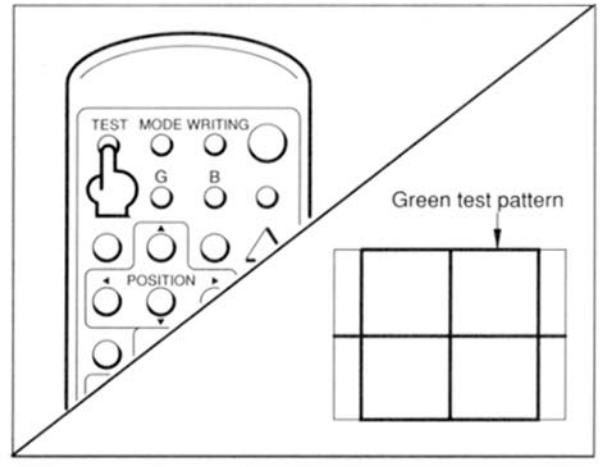

3 **When adjusting the red color.**
Push the [R] key on the remote control.
(A red cross pattern appears on the screen along with the green cross pattern and the frame turns red.)

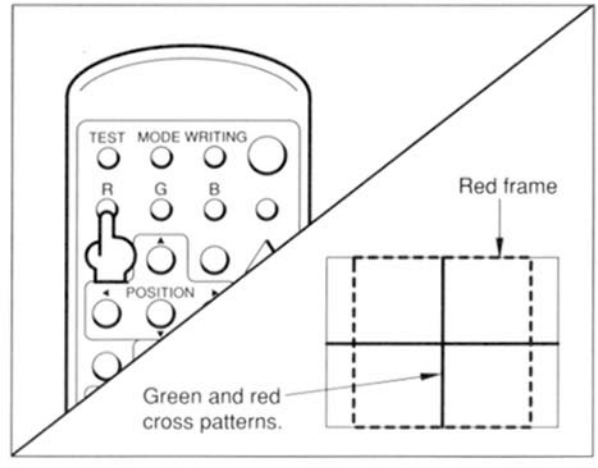

4 Using the [ADJUST] keys on the remote control, align the center of the red cross with the center of the green cross. (When the red cross is superimposed on the green cross, the resultant cross looks yellow.)

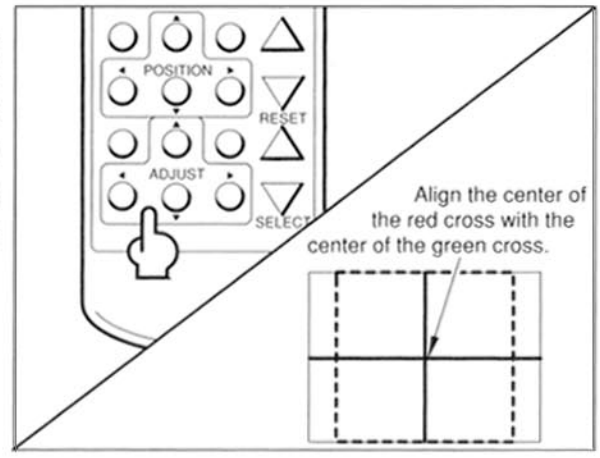

- Move the red cross (not the green cross) for adjustment.

MEMO

5 **When adjusting the blue color.**
Push the [B] key on the remote control. (A blue cross pattern appears on the screen along with the yellow cross pattern and the frame turns blue.)

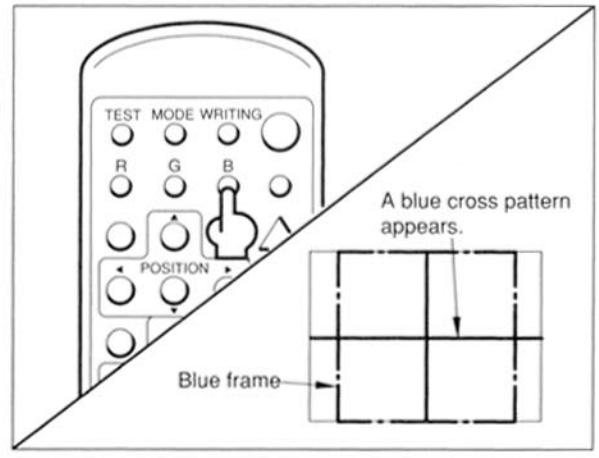

6 Using the [ADJUST] keys on the remote control, align the center of the blue cross with the center of the yellow cross. (When the blue cross is superimposed on the yellow cross, the resultant cross looks white.)

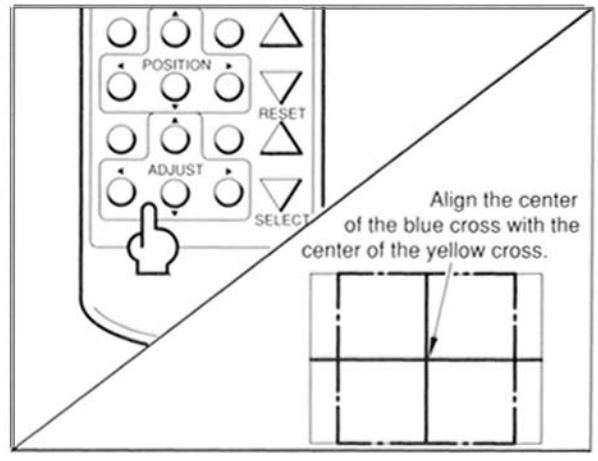

- Selecting red again after adjusting blue will make the red disappear, so select a second time. (Do the same when adjusting blue again after red.)

MEMO

7 Push the [WRITING] key on the remote control to save the adjustments.

8 Turn OFF the [CONV.ADJ.] switch on the projector adjustment PCB.

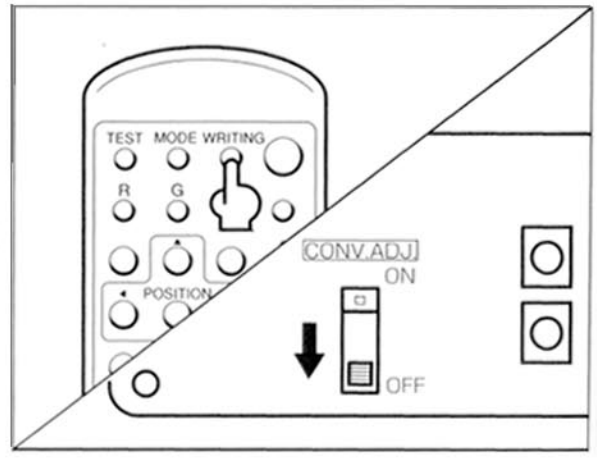

If a partial color drift is found, perform convergence adjustment in the following procedure:

■How to perform partial convergence adjustment

- **Do not perform an extraordinary setting on purpose; otherwise, it will cause a damage.**
- **In case a problem happens during the adjustment, do not push the [WRITING] key but turn OFF the power switch and on again, and readjust the unit.**

1 Turn ON the [CONV.ADJ] switch on the projector adjustment PCB.

2 Point the remote control toward the screen and push the [TEST] key for about 3 seconds. (A green checked pattern appears on the screen.)

3 Push the [MODE] key on the remote control.
(Each pushing of the [MODE] key changes the mode in the following order: adjustment →one-row adjustment→one-point adjustment---. Select one of the modes according to the color drift condition. Here, we will describe the procedure for carrying out partial convergence adjustment, assuring that the one-point adjustment mode has been selected: The screen shows a green checked test-pattern and the marker indicating the place to be adjusted.)

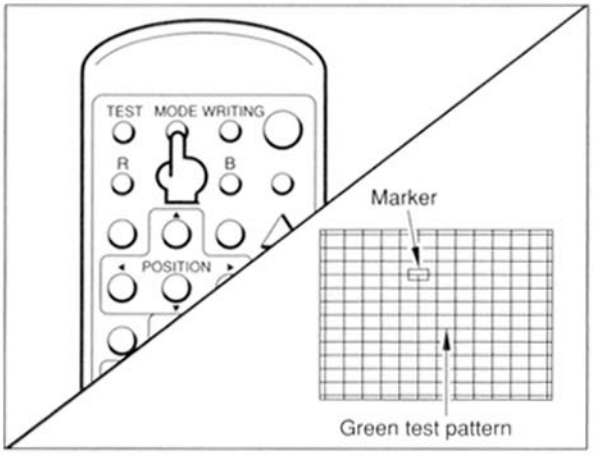

4 **When adjusting the red color.**
Push the [R] key on the remote control.
(A red test pattern appears on the screen along with the green test pattern, and the green marker turns red.)

5 Push the [POSITION] keys on the remote control to move the marker to the place you want to adjust. (The range where the marker can move is limited.)

6 Push the [ADJUST] keys on the remote control to match the red test pattern with the green one. (When the red test pattern is laid over the green one, the resultant test pattern looks yellow.)

7 **When adjusting the blue color.**
Push the [B] key on the remote control.
(The blue test pattern is added to the screen and the red marker turns blue. Adjust the blue color according to the procedure described in steps 5 and 6.)

8 Store the adjustment condition by pushing the [WRITING] key on the remote control.

9 Turn OFF the [CONV.ADJ.] switch on the projector adjustment PCB.

MEMO

7-6 Wiring diagram

GN680-TB specifications for regions using 110 voltage area in Asia.

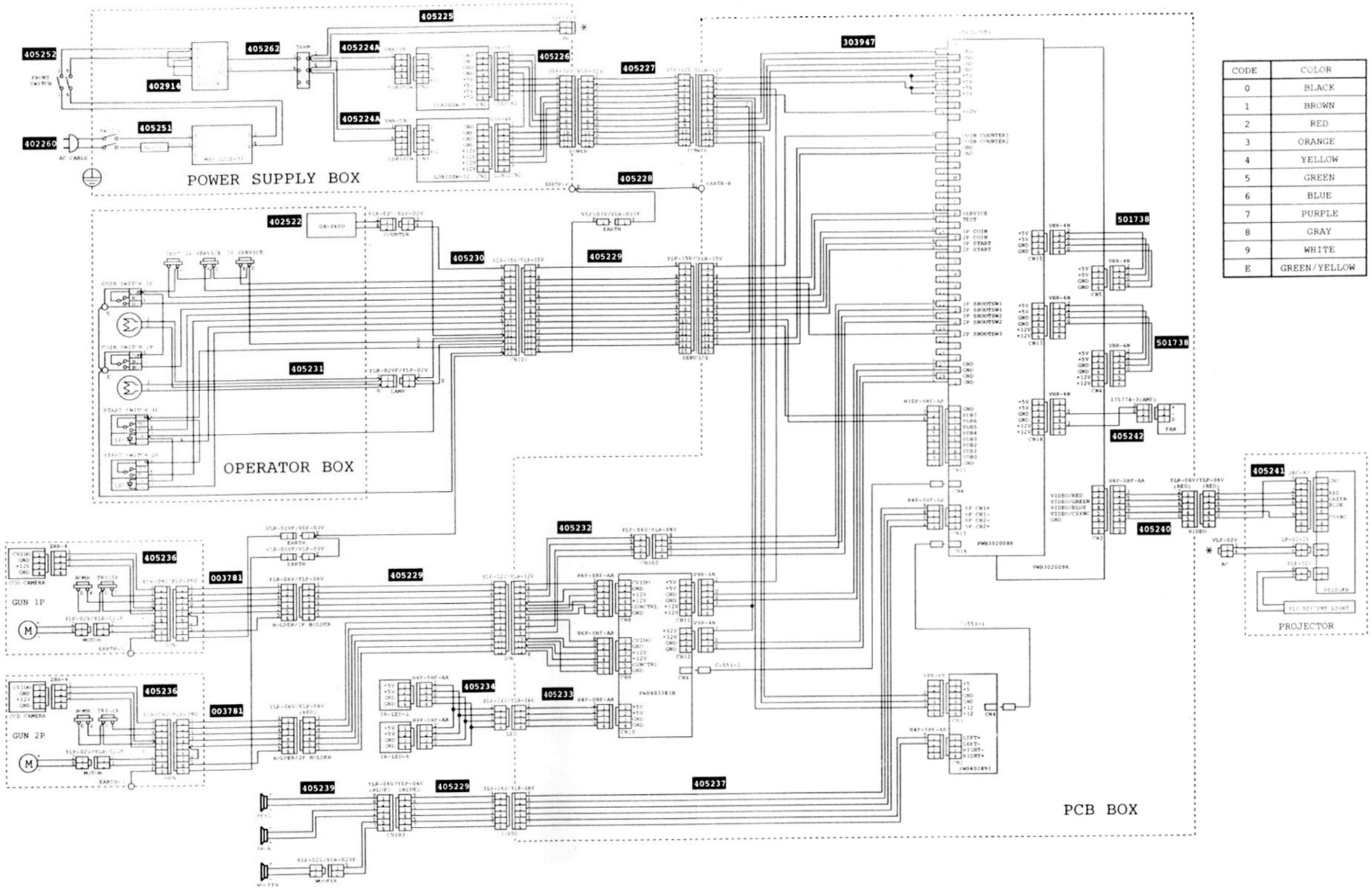

CODE	COLOR
0	BLACK
1	BROWN
2	RED
3	ORANGE
4	YELLOW
5	GREEN
6	BLUE
7	PURPLE
8	GRAY
9	WHITE
E	GREEN/YELLOW

Wiring diagram

GN680-UC specifications for regions using 120 voltage area in the U.S.A..

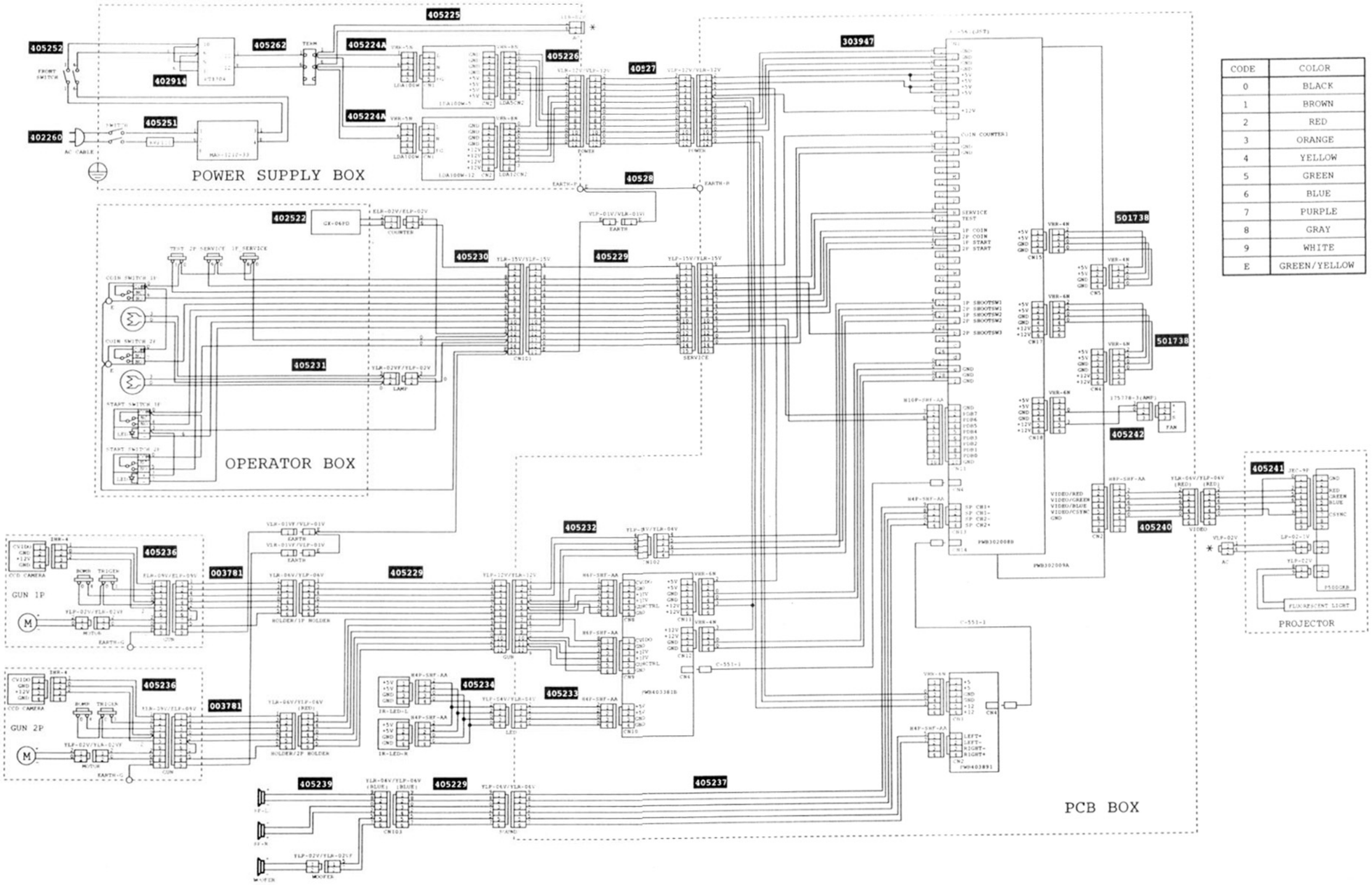

CODE	COLOR
0	BLACK
1	BROWN
2	RED
3	ORANGE
4	YELLOW
5	GREEN
6	BLUE
7	PURPLE
8	GRAY
9	WHITE
E	GREEN/YELLOW

Wiring diagram

GN680-HD specifications for regions using 220 voltage area in Asia.

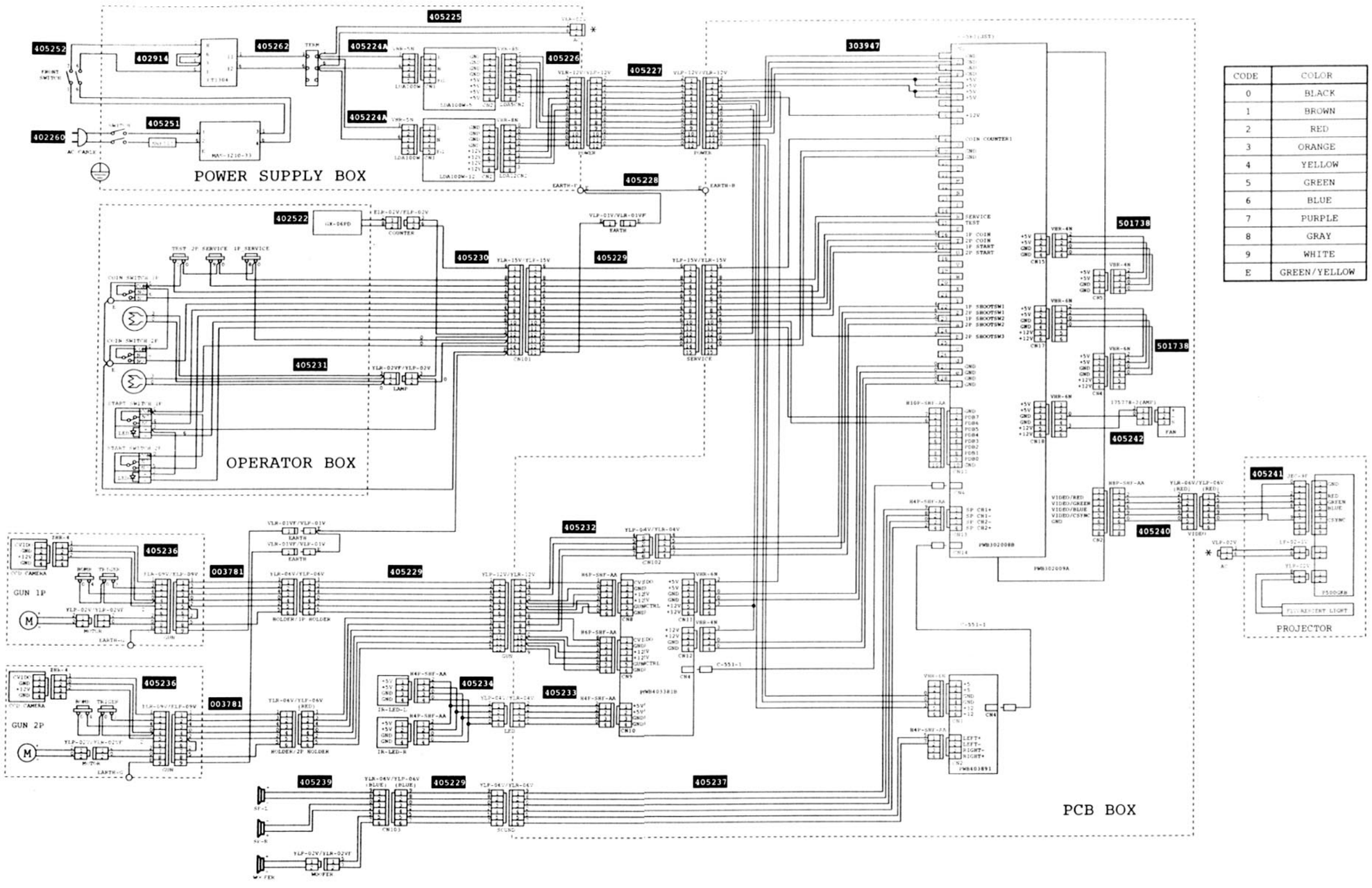

CODE	COLOR
0	BLACK
1	BROWN
2	RED
3	ORANGE
4	YELLOW
5	GREEN
6	BLUE
7	PURPLE
8	GRAY
9	WHITE
E	GREEN/YELLOW

Wiring diagram

GN680-AF specifications for regions using 240 voltage area in Australia.

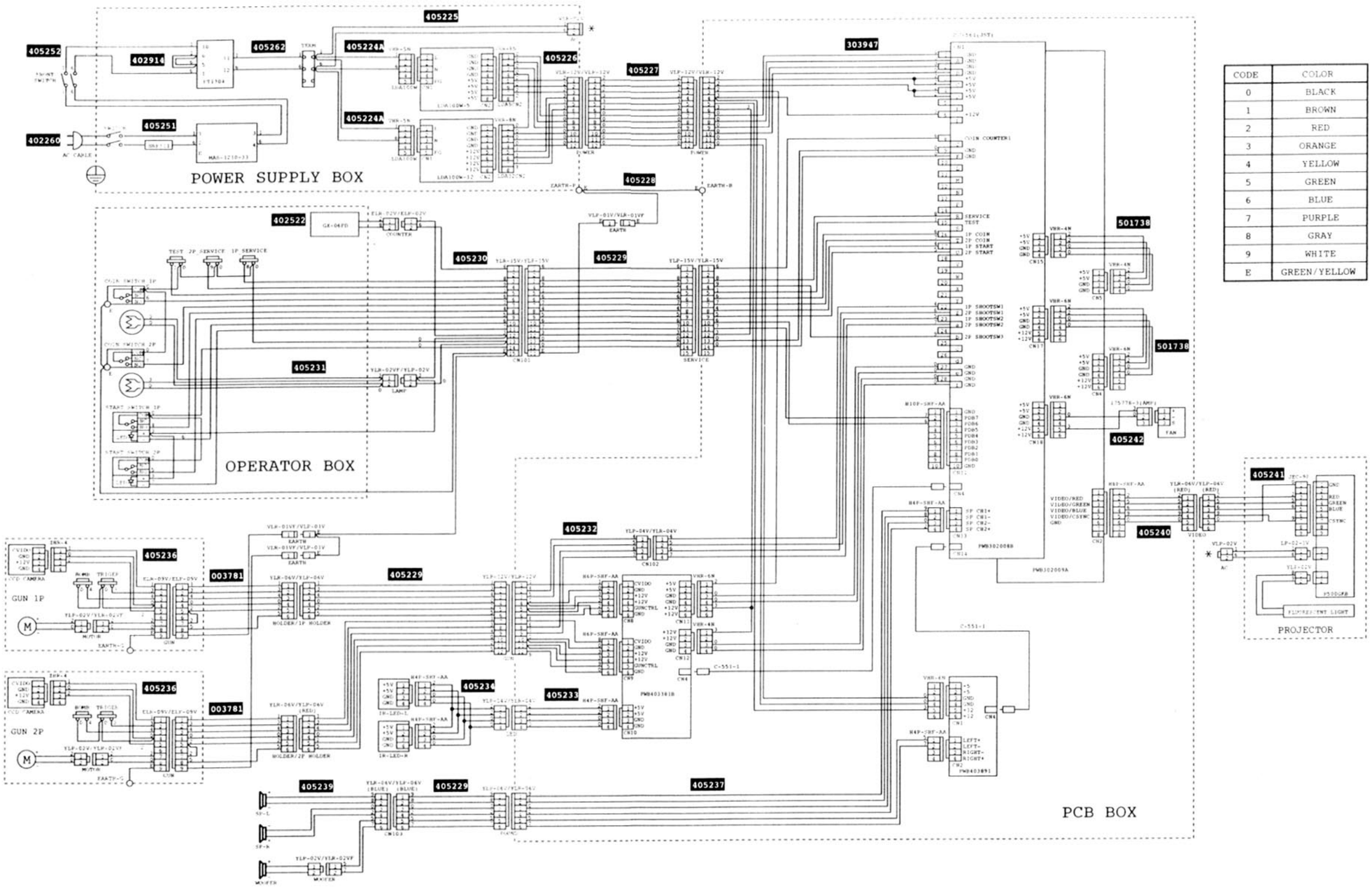

CODE	COLOR
0	BLACK
1	BROWN
2	RED
3	ORANGE
4	YELLOW
5	GREEN
6	BLUE
7	PURPLE
8	GRAY
9	WHITE
E	GREEN/YELLOW