GMC22-HD WORLD COMBAT

KONAMI®

ORIGINAL VIDEO GAME

OPERATOR'S MANUAL

■ WORLD COMBAT ■

WORLDCOMBAT™

©2002 KONAMI

- Failure to operate the machine correctly could result in malfunction or accidents,so please read this manual carefully before commencing operation. Be sure to operate the machine as described in this manual.
- Keep this manual carefully so as to be ready for use when necessary.

PN.0000218535 GMC22-HD

KONAMI®

PN.0000218535

About this product

Thank you for purchasing this KONAMI product. This manual explains how to operate your game machine correctly and safely.

•Failure to operate the machine correctly could result in malfunction or accidents, so please read this manual carefully before commencing operation. Be sure to operate the machine as described in this manual.
•Keep this manual carefully so as to be ready for use when necessary.
•If the machine still fails to display or to get started, immediately turn OFF the main power switch and contact your nearest dealer.

•This product is of "WORLD COMBAT (GMC22-HD)".

•Be sure to read the following.
Set the memory card before use.
It is impossible to use this machine even when you turn ON the main power switch in the factory settings state.
Set the attached memory card to the PCB unit before use.
When starting the machine, read "8-3 Setting the memory card" in page 58 of this manual and follow the procedure.

•The specifications of this product are subject to change without notice for reasons such as improving the performance.

•The contents of this game, its main devices and design are protected under each law concerning patent, copyright and other intellectual properties.

•Unauthorized reproduction of this document or any of its contents is strictly forbidden.

© 2002 KONAMI

Portions of this product©1996-1999 3Dfx Interactive, Inc.

Contents

■ **Precautions for use** **2**

安全使用注意事項 **12**

■ **Locations of warning and other safety labels** **8**

警告標簽等的張貼位置 **19**

1 Specifications **10**

規　格 **20**

2 Contents of the product **22**

3 Names of parts **24**

3-1 Power unit **25**
3-2 Opening and closing the maintenance door **26**
3-3 Service panel **27**
3-4 Opening and closing the coin door **28**

4 How to play **29**

5 Game settings

5-1 Checking the game start up **31**
5-2 Setting and adjustment of game mode **32**
5-3 Mode descriptions **33**
5-4 Adjusting the monitor **48**

6 Operation

6-1 Checking at the start of work **51**
6-2 Periodic inspection **52**

7 Daily Maintenance **53**

8 Installation and assembling

8-1 Installation environment **56**
8-2 Installation procedure **57**
8-3 Setting the memory card **58**
8-4 Setting the rear unit **62**
8-5 Fastening the adjusters **63**
8-6 Setting the net unit **64**
8-7 Setting the front unit **65**
8-8 Mountiong the billboard **66**
8-9 Splitting into and moving of units **67**
8-10 Moving the coin counter **68**

9 Maintenance

9-1 Replacing the coin selector **69**
9-2 Replacing the fluorescent light **70**
9-3 Replacing the start button **71**
9-4 Replacing the gun unit **74**
9-5 Resetting the circuit protector **75**
9-6 Troubleshooting **76**

10 Annex

10-1 Label locations and exploded view **79**
10-2 Wiring diagram **95**

ENGLISH

Precautions for use

The following safety precautions are given throughout this manual. They must be strictly followed to protect those who install, use or maintain this product as well as to prevent other people's injuries and property damages.

Be sure to read the following

•The following suggestions show the degree of danger and damage caused when the product is used improperly with the suggestions disregarded.

WARNING	**Indicates a situation where disregarding the suggestions could result in death or serious injury.**
CAUTION	**Indicates a situation where disregarding the suggestions could result in injury or product damage.**

•The following graphic suggestions describe the types of precautions to be followed.

	Indicates a matter of which care should be taken.
	Indicates a matter which is forbidden.
	Indicates a matter which should be performed without fail.

•Definitions of qualified in-shop maintenance persons and industry specialist who handle this product.

•In this instruction manual, some procedures require a qualified in-shop maintenance person or industry specialist. For such instructions, a qualified person must take care of the jobs.

·Otherwise an electric shock, machine trouble, or a serious accident may result.

·Replacing the machine parts, inspecting and maintaining the machines, and troubleshooting must be assigned only to a qualified in-shop maintenance person or industry specialist. This booklet gives instructions that hazardous jobs in particular must be handled by an industry specialist. Qualified in-shop maintenance persons and industry specialist are defined as follows.

Qualified in-shop maintenance persons

· A qualified in-shop maintenance person must have experiences in maintaining amusement machines, money changers and the like. Under the supervision of an amusement machines shop owner or manager, he or she routinely assembles, installs, inspects and maintains the amusement machines, or replaces their component units and consumable parts, in the amusement machines workshop and/or shop.

Jobs handled by qualified in-shop maintenance persons

· Assembling, installing, inspecting and maintaining amusement machines and money changers, and replacing their component units and consumable parts.

Industry specialist

· An industry specialist must be engaged in designing, manufacturing, inspecting and servicing amusement machines. Or he or she must have an education in electrical, electronic and mechanical engineering, and routinely maintain and repair amusement machines.

Jobs handled by industry specialist

· Assembling and installing amusement machines and money changers, and repairing and adjusting their electrical, electronic and mechanical component parts.

Setting Up

WARNING

•Be sure to consult your nearest dealer when setting up, moving or transporting this product.
·This product should not be set up, moved or transported by anyone other than industry specialist. Doing so could result in injury or product damage.
·When installing this product, be sure to set the 10 adjusters stable on the floor and make sure that the product is installed stably in a horizontal position.
Unstable installation may result in injury or accident.
·When installing this product, use case not to apply undue force to opening and closing parts and other movable parts. Otherwise, injury or accident may result, or the product may be damaged.

•This product is an indoor game machine. Never set up the game machine outside.
·Setting up this product outside could result in accidents or equipment failure.

•Do not set up the game machine near emergency exits.
·Doing so could block exits in time of emergency and could result in death or serious injury.

•Do not set up the game machine.
·Otherwise an accident or malfunction may result.
·In a place exposed to rain or moisture.
·In a place exposed to direct sunlight.
·In a place exposed to direct heat from air-conditioning and heating equipment, etc..
·Near hazardous flammable substance such as thinner and kerosene.
·On an inclined or uneven floor.
·Near fire extinguishing equipment.
·In a place exposed to strong vibration.
·In a place exposed to excessive dust.
·Near equipment generating strong magnetism or electric waves.
·Where a high-pressure cleaning machine is used.

•Do not place containers holding chemicals or water on or near the game machine.
·Electrical shock or damage could be caused by water or foreign matter entering the inside of the machine.

•Do not place objects near the ventilating holes.
·Doing so could cause the internal temperature to rise excessively, resulting in fire or equipment failure.

•Do not bend the power cord by force or place objects on it.
·Doing so could result in electric leakage or fire.

•Never plug or unplug the power cord with wet hands.
·Doing so could result in electrical shock.

•Never unplug by pulling the power cord.
·Doing so could damage the cord, resulting in electric leakage or fire.

•When opening the back door for setting the memory card, be sure to turn OFF the main power switch and unplug the power cord.
·Otherwise an accident or electric shock may result.

ENGLISH

Setting Up

CAUTION

- **Be sure to use indoor wiring for within the specified voltage range. When using an extension cord, connect it independently to the indoor wiring of more than the specified rating.**
  ·Failure to do so could result in fire or equipment failure.
- **Be sure to use the attached power cord.**
  ·Otherwise a fire or machine trouble may result.
- **Never plug more than one cord at a time in the electrical receptacle.**
  ·Doing so could result in fire or electrical shock.
- **Do not lay the power cord where people walk through. You may tread on or stumble over them.**
  ·You may stumble down and get injured, or damage the power cord.
- **Be sure to ground to the machine.**
  ·Otherwise an electric shock or machine trouble may be caused.
- **Keep the specified clearances (See page 11.) between the game machine and walls as well as other products.**
  ·Otherwise the machine (s) cannot be ventilated well, resulting in malfunction.
- **Do not install this machine in a place where the sensors are exposed to direct sunlight or a strong light, or near a place where exists something like a mirror or metal plate which reflects the light. (See page 56.)**
  ·Otherwise, the sensors may not work normally.
- **Do not apply a strong force for moving the machine.**
  ·Otherwise, it may result in an accident or breakage of the units.
- **Do not put anything around the machine, which may hamper the play. (See page 11.)**
  ·This may not just stand in the player's way but also cause an accident or injury. Ensure space open enough for the player's body not to hit against nearby walls or other machines.
- **Before detaching and attaching the memory card, put on a grounding band for anti-static measure. Do not handle these parts on a carpet or rug.**
  ·Static electricity may damage the electronic parts in the PCB unit.
- **Do not change the DIP switch setting of this product to other than factory setting.**
  ·Otherwise, the game can not be played properly.
- **Do not coat the monitor glass, nor apply stickers and the like on it.**
  ·Otherwise, the machine may fail to play the game properly or get in trouble.

Operation

WARNING

•If there is any abnormality such as smoke, bad smell or abnormal noise being emitted from the machine, immediately turn OFF the main power switch and unplug the power cord from the receptacle to stop operating it.
·Using the machine in abnormal conditions could result in fire or accidents.

In case of abnormality

1 Turn OFF the main power switch.
2 Unplug the power cord from the receptacle.
3 Contact your nearest dealer.

•Do not plug or unplug the power cord with wet hands.
·Doing so could result in electrical shock.

•Do not leave the power cord plugged improperly or covered with dust.
·Doing so could result in electrical shock or fire. Check the power cord once a month or more frequently.

CAUTION

•Do not use this product anywhere other than industrial areas.
·Using in a residential area or an area next to a residential area could affect signal reception of radios, television sets, telephones, etc..

•Players should be advised of the following precautions.
·Doing so could cause accidents or illness.

·Please do not play this game if
·You have been drinking.
·You are tired are sick or have been recently sick.
·You think you might be pregnant.
·You exercise is medically regulated.
·You are susceptible to muscle spasms or loss of consciousness due to sound, light or moving pictures.
·Those who has a disease in hands or wrists.

•Players should be advised of the following precautions during a play.
·Inobservance of the precaution may cause an accident.

·Do not play violently. You may get injured.

•Do not give impact to the glass cover.
·Otherwise, it may result in an unexpected accident or injury.

•Adjust the monitor appropriately.
·If the player continues the game with distorted image or flickers appearing on the monitor display, he (or she) and onlookers around him (or her) may have a headache or feel dizzy to cause disturbance of health.

•Do not give an impact to the gun unit nor throw it.
·Otherwise, an unexpected accident or injury may be caused.

•In handling the power cord, follow the instructions below.
·Otherwise an electric leak, fire or electric shock may result.

·Do not damage the power cord.
·Do not modify the power cord.
·Do not bend the power cord excessively.
·Do not twist the power cord.
·Do not heat the power cord.
·Do not pull the power cord.
·Do not bind the power cord.
·Do not tread on the power cord.
·Do not sandwich the power cord.
·Do not drive a nail into the power cord.

•If the power cord or power plug becomes damaged, stop using the machine immediately and ask your nearest dealer to replace the parts.
·Using a damaged power cord or power plug could result in fire or electrical shock.

•Make sure that the gun unit is set correctly in place.
·If not, it may fall down to cause human injury or it may be broken.

ENGLISH

Inspection and cleaning

WARNING

- **Be sure to turn OFF the main power switch and unplug the power cord from the receptacle before inspecting or cleaning the machine.**
  ·Failure to do so could result in electrical shock.

- **When replacing parts, be sure to use parts of the correct specifications. Never use parts other than the specified ones.**
  ·Using improper parts could result in fire or equipment failure.

- **There is high voltage inside the machine. Only the qualified industry specialist is allowed to open the back door. With the back door open, be very careful not to touch the monitor and its nearby parts.**
  ·Otherwise an accident or electric shock may result.

- **When opening the back door, be sure to turn OFF the main power switch and unplug the power cord from the receptacle.**
  ·Otherwise, there may arise a danger of accident or electric shock.

- **Strictly refrain from disassembly and repair of parts which are not indicated in this manual, as well as settings and remodelling.**
  ·Otherwise, a fire, malfunction or trouble may result.
  In case of any trouble, ask your nearest dealer for repairs and other services.
  KONAMI will not resume any responsibility for the damage to the product attributable to disassembly and repair of parts which are not indicated in this manual, as well as settings and remodelling.

- **There are high voltage sections inside the center unit and the rear unit. These sections are very dangerous. Do not open the back doors of the center unit and rear unit by any other person than engineer. With the back door open, be very careful not to touch the monitor and its nearby parts.**
  ·Otherwise an accident or electric shock may result.

- **To clean the game machine, wipe it with a soft cloth dampened in a neutral detergent and wrung out.**
  ·Use of organic solvents such as thinner, alcohol, etc. for cleaning may degrade the machine body.
  ·Electrical shock or equipment failure could be caused by water entering the inside of the machine.

- **Do not use a high-pressure cleaning machine to clean up this product.**
  ·Water coming in the product may result in an electric shock or machine trouble.

CAUTION

- **Do not coat the monitor glass, nor apply stickers and the like on it.**
  ·Otherwise, the machine may fail to play the game properly or get in trouble.

Moving and transportation

CAUTION

- **Before separating the units or moving the machine, be sure to turn OFF the main power switch, unplug the power cord, and disconnect the power cord.**
  ·Stepping on or tripping over the power cord may result in an accident or damage the machine.
- **When moving the machine, be sure to separate the front unit, center unit and rear unit beforehand.**
  ·Otherwise, an accident, breakage or trouble may result.
- **When moving the units, raise the 4 adjusters each for the units to full extent and roll them on the casters.**
  ·Otherwise, an accident, breakage or trouble may result.
- **When moving the units, use care not to apply a strong force to them.**
  ·Otherwise, it may result in an accident or breakage of the units.
- **When moving the front unit, do not heave it up by holding the gun unit.**
  ·Otherwise, injury or accident may be caused.
- **Do not apply a strong force for moving the machine.**
  ·Otherwise, it may result in an accident or breakage of the units.
- **When moving the mathine or when moving it across a difference in level, more than 4 persons should be hold it always by the grips.**
  ·Otherwise, it may fall down to cause an accident or be broken.
- **When moving the machine, use care not to apply undue force to opening and closing parts as well as moving parts.**
  ·Otherwise, injury or accident may be caused.

Disposal

- **When disposed, this machine and its components must be handled as industrial solid waste. The owner of this product is responsible for disposing of them according to the relevant laws. The shipping package and other materials should also be disposed of according to your local rules and regulations.**

PRECAUTION IN HANDLING

- When setting up or handling this product, follow the procedures and instructions set forth in this manual and perform such work safely.
- Do not remove labels of “WARNING”, “CAUTION”, etc. attached to the product.
- Do not set up or handle this product under conditions equivalent to the condition of “WARNING” or “CAUTION” specified in this manual.
- If a new owner is to have this product as a result of transfer, etc., be sure to give this manual to the new owner.

Locations of warning and other safety labels

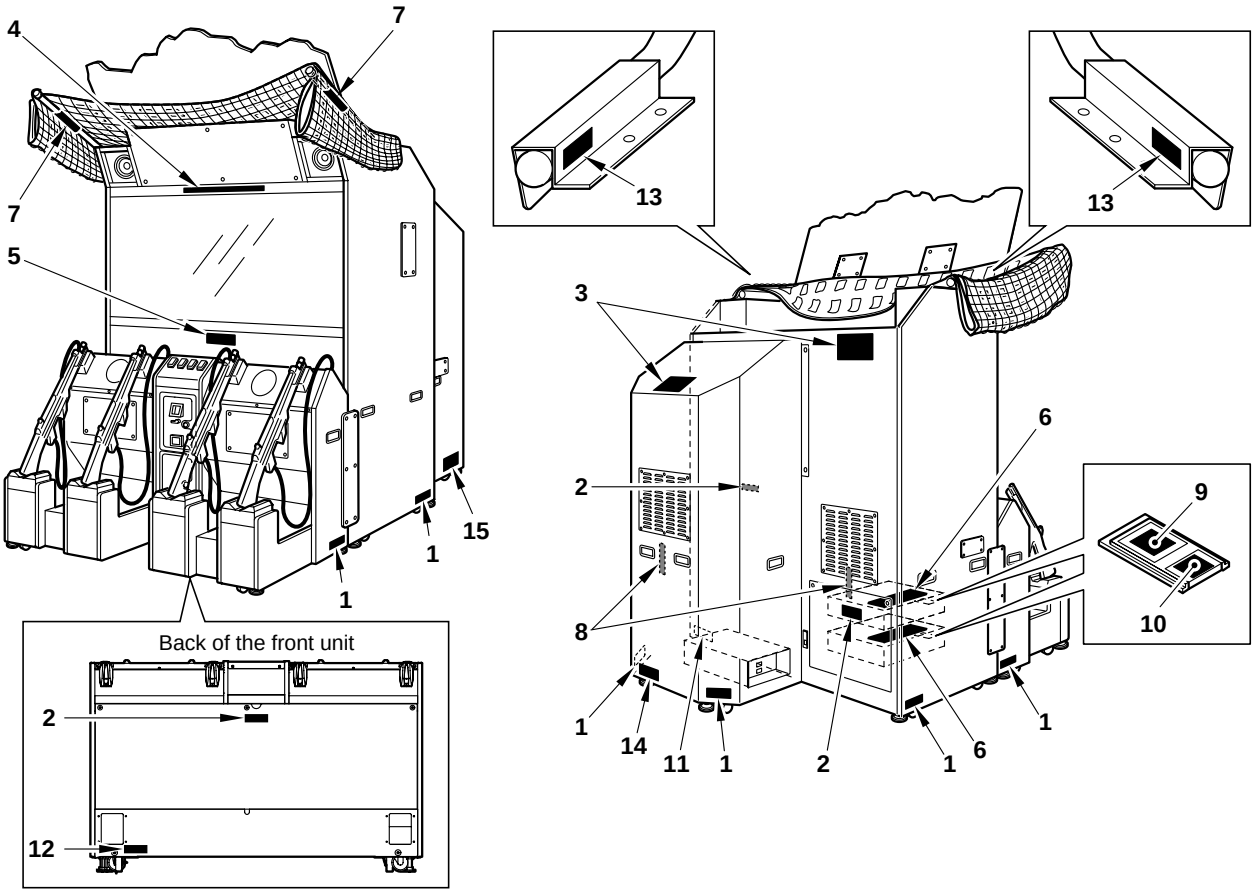

Types of warning and other safety labels

1

⚠ WARNING

Ensure all leg levellers are securely set and game cabinet is level.

PN.0000036360

2

⚠ WARNING

ELECTRICAL SHOCK HAZARD.
DO NOT OPEN EXCEPT
FOR SERVICE.

PN.0000032450

3

⚠ 警告（けいこく） WARNING

悪い例／BAD!

良い例／GOOD!

押す方向によっては転倒する場合があります。
本ユニットを移動させるときは、必ず図の方向で押してください。また、斜面を移動するときや段差を乗り越えるときは、必ず2人以上で行ってください。

Unit may fall if you push or truck from the wrong side. To move the unit, please push as indicated in the picture. When moving it on a slope or getting it over a level difference, be sure to take the buddy system.

PN.0000061561

4

⚠ CAUTION DO NOT STRIKE THE GLASS SURFACE. DOING SO MAY CAUSE ACCIDENT OR INJURY.

PN.0000186572

5

⚠ CAUTION

Please do not play this game if

- you have been drinking.
- you are tired are sick or have been recently sick.
- you think you might be pregnant.
- You are susceptible to muscle spasms or loss of consciousness due to sound, light or moving pictures.
- Your exercise is medically regulated.

PN.0000189983

6

⚠ 注 意（ちゅうい） / CAUTION

PN.0000112088

7

⚠ Please don't hang on this bar.

PN.0000106031

8

⚠ HAZARDOUS VOLTAGE HAZARDOUS VOLTAGE ⚠

PN.0000049570

9

PN.0000088991

10

PN.0000124371

11

Weight 205kg(452lb) PN.0000045483

PN.0000045483

12

Weight 92kg(203lb) PN.0000128087

PN.0000128087

13

Weight 8kg(17lb) PIPE×2 6kg(13lb) / NET ×1 2kg (4lb) PN.0000128074

PN.0000128074

14

Weight 108kg(238lb) PN.0000128086

PN.0000128086

15

MODEL	GMC22-HD WORLDCOMBAT
POWER	220 V / 50 Hz 350 W
MANUFACTURER	KONAMI CORPORATION
DATE OF MANUFACTURE	December,2002
WEIGHT	413kg(910.5lb)
SERIAL NUMBER	

KONAMI MADE IN JAPAN INDOOR USE

•Label 15 is not reissued.

MEMO

1 Specifications

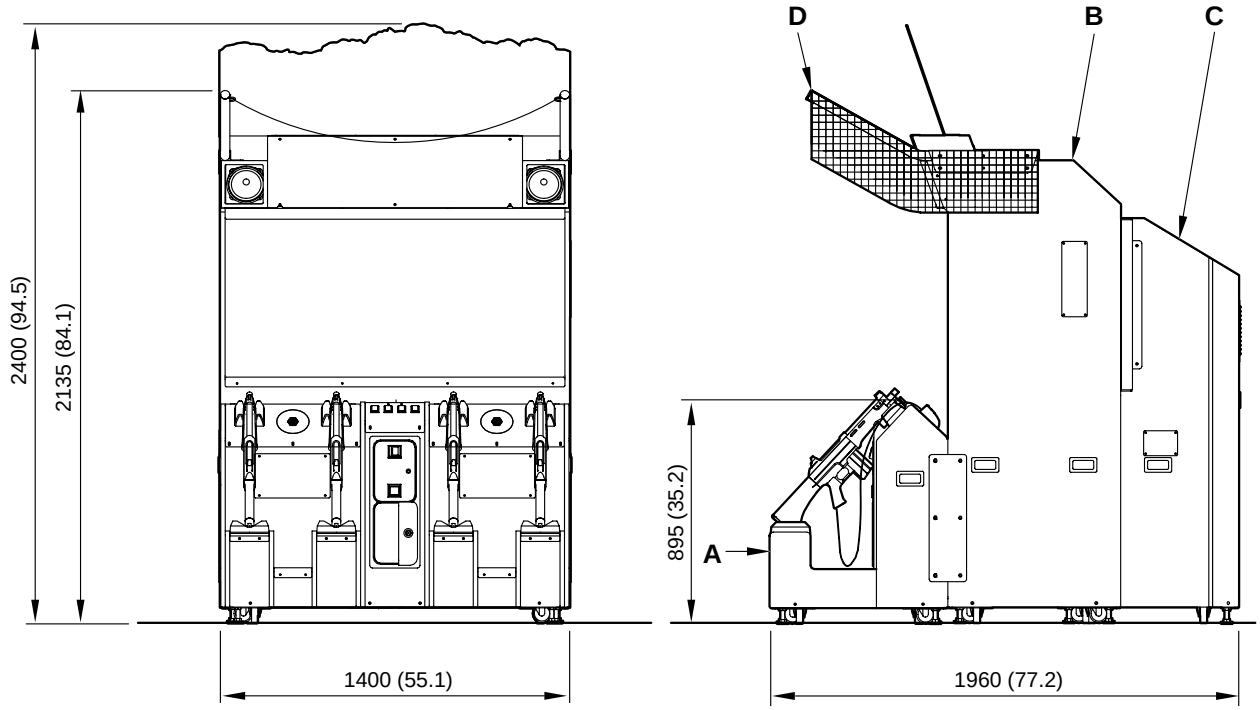

Specifications

Dimensions	Refer to the figure above : mm (in)
Weight	Total weight : Approx. 413 kg (910.5 lb) **A** Front unit : Approx. 92 kg (203 lb) **B** Center unit : Approx. 205 kg (452 lb) **C** Rear unit : Approx. 108 kg (238 lb) **D** Net unit : Approx. 8 kg (17 lb)
Rated power consumption	350W
Monitor	29-inch CRT (2 sets)
Service condition	Temperature 5 to 35˚C (33 to 95˚F), Humidity 20 to 70% (No dewing is allowed.)

•The specifications of this product are subject to change without notice for reasons such as improving the performance.

ENGLISH

Allowance for Carrying-in and Installation of Product

The following allowance dimensions are necessary for carrying the product indoors.

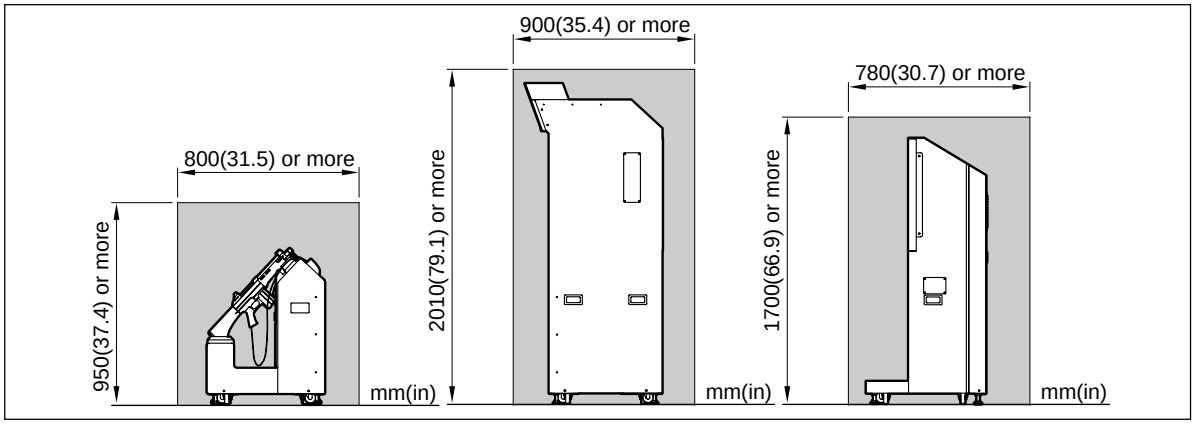

Provide a space of the following dimensions for installation of the product.

Clearances from the wall and other machines

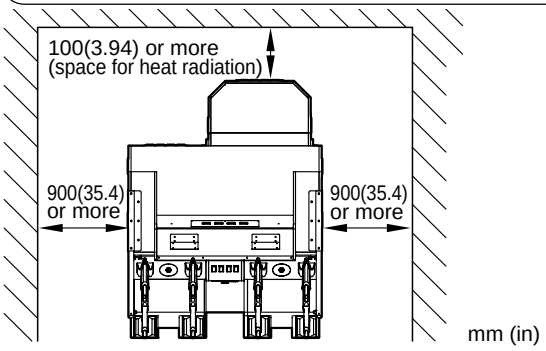

•Keep the specified clearances between the game machine and walls as well as other products.
•Do not put anything around the machine, which may hamper the play.

Keep the following points in mind when moving the product.

•When moving the machine, be sure to separate the front unit, center unit and rear unit beforehand.
•When moving the units, use care not to apply a strong force to them.
•When moving the units, use care not to apply undue force to opening and closing parts as well as moving parts.
•When moving the mathine or when moving it across a difference in level, more than 4 persons should be hold it always by the grips.
•When moving the front unit, do not heave it up by holding the gun unit.

¥Be sure to push the center unit and rear unit in the arrow directions shown in the figure.

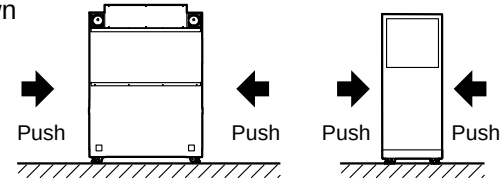

¥When heaving up the center unit, more than 6 persons should hold it. When heaving up the rear unit, more than 4 persons should hold it.
Be sure to hold them by the grips or at the bottoms.

Center unit : Approx.205kg (452lb)
Rear unit : Approx.108kg (238lb)

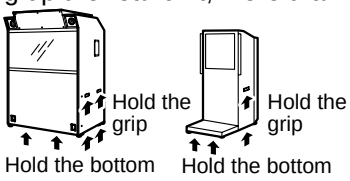

Never tilt the machine.

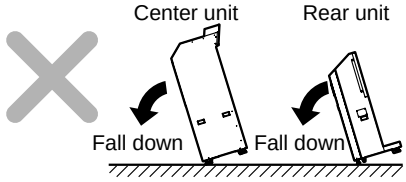

Never tilt the units forward or backward when moving them. It is very dangerous.

Do not move the center unit by holding the glass face.

■ 安全使用注意事項

本書說明爲防止危害本產品的設置、使用、維護等人員及他人和財產的安全注意事項，本書內容務請遵守。

務　請　閱　讀

CHINESE

●本書使用如下標注，區分無視表示內容、錯誤使用時產生的危險和損害程度。

⚠ 警告	該項標注表示“有可能造成死亡或身負重傷”的內容。
⚠ 注意	該項標注表示“有可能造成傷害或物品損壞”的內容。

●本書使用如下圖標，說明務請遵守的內容種類。

⚠	本圖標表示“提請注意”的內容。
🛇	本圖標表示“禁止”的內容。
	本圖標表示“強制實行”的內容。

●經營本產品的店內維修人員和技術人員的定義

●本書中記載的說明中，凡指示爲由“店內維修人員”或“技術人員”進行的操作，必須由具有專門知識和技術的人員進行。
・否則，將造成觸電或故障等重大事故。
・交換本產品零件、維修檢查、以及處置發生的異常情況時必須由“店內維修人員”或“技術人員”進行。本書中，特別是有關危險的操作規定由“技術人員”進行。有關“店內維修人員”和“技術人員”定義如下：

什麼是店內維修人員？
・擁有娛樂機器、換錢機的維修經驗，在娛樂機器（本產品）的所有者和運營者的管理下，對娛樂設施或店內的機器進行日常的安裝、設置、檢查維修，交換裝置和消耗零部件等對機器整體進行維修管理的人員。

店內維修人員的工作內容
・安裝、設置、檢查維修娛樂機器和換錢機，交換裝置和消耗零部件。

什麼是技術人員？
・關機器設計、製造、檢查和維修工作的人員，以及具有，擁有電子、機械工學等專門技術知識，日常對娛樂機器進行維修管理和修理的人員。

技術人員的工作內容
・安裝、設置娛樂機器和換錢機，對電子部件和結構部件進行修理和調整。

設置時

⚠ 警告

●本產品的設置、移動或搬運時，務必同當地的經銷店商洽。
- 除專門人員以外，擅自設置、移動以及搬運本產品，將會導致產品損壞。
- 設置本產品時，必須將十個調節腳的底面平穩地放在地面，使其成為水平狀態，不可晃動。否則，不穩定的放置將會導致受傷或發生事故。
- 在設置本產品時，請不要對開關部位和可動部位癸分施加力量，否則將會導致受傷或發生事故，並導致產品損壞。

●本產品爲室內用遊戲機，絕對不可設置在室外。
- 如果設置在室外，將會導致發生事故或出現故障。

禁　止

●請不要把本產品設置在建築物的緊急出口處。
- 否則發生災害時人員無法避難，將會導致傷亡。

禁　止

●此外，請不要把本產品設置在以下場所。
- 否則將會導致發生事故或出現故障。
  - 漏雨或因潮濕結露的場所
  - 受直射陽光照射的場所
  - 直接受取暖用具等直接輻射的場所
  - 煤油、稀釋劑等引火性強的危險品附近
  - 傾斜以及強度弱的不穩定場所
  - 消防設備附近
  - 振動的場所
  - 灰塵集中的場所
  - 散發強烈磁氣和電波的機器附近
  - 使用高壓清洗機的地方

禁　止

●本產品上側及附近，請勿放置裝水或藥品的器物。
- 水分和異常物品進入內部時，將會導致觸電或發生故障。

禁　止

●請勿在通風口附近放置物品。
- 如果妨礙通氣，內部溫度上昇，將會導致發生火災或故障。

禁　止

●電源線請不要過度彎曲或在上面放置物品。
- 否則將會導致發生漏電事故或火災。

禁　止

●絕對不可用濕手插拔電源插頭。
- 否則將會導致觸電。

禁　止

●拔下電源插頭時，不要手持電源軟線。
- 否則電源軟線破損，將會導致發生漏電事故或火災。

禁　止

●在插入記憶卡之情況下打開背面門時，必須關閉主電源開關，并從電源插座上拔出電源插頭。
- 否則將會導致觸電或發生故障。

拔下電源插頭

CHINESE

設置時

⚠ 注意

●務必使用符合規格的電源。利用加長電線時，應單獨使用符合規格的室內用線。
・否則，將會導致發生火災或故障。

●務請使用附屬的電源軟線。
・否則，將會導致發生火災或故障。

●請絕對不要使用多用插頭。
・否則，將會導致發生火災或故障。

禁　止

●請不要將電源軟線設置在可被人踩拉的通道上。
・否則將會導致人員摔倒受傷，或電源軟線受到傷損。

禁　止

●本產品必須連接地線。
・如果不連接地線，將會導致觸電或故障。

連接地線

●設置本產品時，請與牆壁和其他產品按規定的距離隔開（參閱第二十一頁）。
・否則，將會導致本體不能正常散熱，發生故障。

●在設置本產品時，請勿將各傳感器設在會受強烈陽光照射，及鏡子或金屬板等會反射陽光的地方（參閱第五十六頁）。
・傳感器可能會無法正常運作。

●移動本產品時請不要過分用力。
・否則將會導致發生事故或破損。

禁　止

●在本產品的周圍，請勿放置會妨礙遊戲的物品（參閱第二十一頁）。
・否則將會影響正常游戲，導致發生事故或人員受傷。此外，還需要留下一定的空間，以免游戲時身體碰到牆壁或其它產品。

禁　止

●裝卸內存卡時請用地線固定件進行去除靜電措施，並不可在絨毯或地毯進行。
・否則靜電發生將會導致PCB裝置內的電子零部件破損。

禁　止

●請不要改變本產品的開關位置。
・否則，將不能正常遊戲。

禁　止

●請勿塗抹螢幕玻璃板，或是貼上貼紙。
・否則將會導致無法進行正常遊戲或發生故障。

CHINESE

使用時

⚠ 警告

●**如果本產品萬一發生冒煙、臭味或者異常聲響時、請立即關閉主電源開關，將電源插頭從插座上拔下，停止使用。**

・否則，繼續在異常狀態下使用，會導致發生火災和事故。

拔下電源插頭

發生異常情況時

1 關閉主電源開關
2 將電源插頭從插座上拔下
3 通知當地的經銷店

●**絕對不可用濕手插拔電源插頭。**

・否則將會導致觸電。

禁　止

●**不得在電源插頭未正確插入插座中或積滿灰塵的狀態下放置不管。**

・否則，可造成觸電或火災。應至少每月一次以上進行檢查。

禁　止

⚠ 注意

●**本產品不可在商工業地區以外使用。**

・如果在住宅地區或與其相鄰的地區使用，將會影響電視機、收音機和電話機等接受信號。

禁　止

●**請遊戲者注意以下事項。**

・否則將會導致發生事故或病癥，致使病癥加重。

・請以下人士不要進行遊戲。
・飲酒者　・疲勞、睡眠不足、病中病後、受傷以及身體不適者
・孕婦或有可能懷孕者　・醫囑不能激烈運動者
・曾經因受聲音、光線以及影像等的刺激而發生肌肉痙攣、意識喪失者或有其可能者　・手和手腕處患有疾病，或正在治療中。

●**在遊戲中如遇以下情況，請招喚服務人員。**

・否則將會導致事故。

・請不要過分激烈遊戲，否則將會導致人員受傷。

●**請不要撞擊玻璃面。**

・否則將會導致發生意外事故或受傷。

●**請妥當地調整螢幕，進行運作。**

・如果在螢幕畫面出現搖晃或是歪斜的狀態下進行遊戲時，遊戲者及周圍的人有可能會因此產生頭暈或頭疼等的身體不適現像。

●**請勿將槍支組裝給予衝擊或是投扔。**

・否則將會導致發生意外事故或受傷。

CHINESE

●使用電源軟線時，請遵守以下事項。
・否則將會導致發生漏電事故、火災或觸電。

・不可損傷	・不可加工	・不可過分彎折	・不可擰轉	・不可加熱
・不可拉拽	・不可捆綁	・不可用腳踩	・不可夾住或釘釘	

●萬一發生電源軟線或電源插頭損傷時，立即停止使用，委託當地的經銷店更換零件。
・在破損狀態下持續使用，將會導致發生火災或觸電。

●請確認槍支組裝是否收放在正確的位置。
・可能會使槍支組裝傾倒而造成傷害，或是槍支組裝破損。

CHINESE

檢查和清掃

⚠ 警告

●檢查或清掃本產品時，務請關閉主電源開關，將電源插頭從插座上拔下。
・否則將會導致觸電。

拔下電源插頭

●交換零件或消耗零件時，必須使用本公司指定的零件，絕對不可使用其他零件或混用。
・否則將會導致發生火災或故障。

禁　止

●　產品內部電壓高壓部位危險，除技術人員外，不可打開背面門。如打開背面門時，注意不可隨意觸摸顯示屏周圍。
・否則將會導致發生事故或觸電。

禁　止

●不關閉電源裝置的主電源開關，只關閉服務盤上的電源時，本體內仍然通電。打開背面門時，必須關閉主電源開關，將電源插頭從插座上拔下。
・否則將會導致發生事故或觸電。

拔下電源插頭

●請不要對本説明書中未指定的部位進行分解、修理、各種設定或者改造。
・否則將會導致火災、動作失誤或故障等。需要修理等時，請委託當地的經銷店。
因對未指定的部位進行分解、修理、各種設定或者改造而導致的損害，本公司概不負責。

禁止分解

●傳感器組裝和後部組裝內部，局部有高壓電，極危險。非專業人員請勿擅自打開傳感器組裝和後部組裝的門扇。
打開背面門時，必須關閉主電源開關，將電源插頭從插座上拔下。
・否則將會導致發生事故或觸電。

禁　止

●清掃本產品時，請使用浸有中性洗滌劑的軟布擰乾後進行擦拭。
・使用稀釋劑或是酒精等有機溶劑時，本體可能會產生變質。
・如果本體內部浸水，將會導致觸電或發生故障。

●請不要用高壓沖洗機對本產品進行沖洗。
・否則，機器里面進水會導致觸電或產生故障。

禁　止

檢查和清掃

⚠ 注意

●**請勿塗抹螢幕玻璃板，或是貼上貼紙。**
・否則將會導致無法進行正常遊戲或發生故障。

移動、搬運時

⚠ 注意

●**分拆或移動本產品前，務必關閉主電源開關，從插座上拔下電源插頭，取下電源軟線。**
・否則踩到或勾到電源軟線，將會導致發生事故或破損。

拔下電源插頭

●**在移動本產品時，請務必事先拆解前方組裝和槍支組裝、以及後部組裝後再行作業。**
・否則將會導致發生事故，破損或故障。

●**在移動各組裝時，請事先把各組裝的四個固定器轉至最上方，再以小腳輪移動。**
・否則將會導致發生事故，破損或故障。

●**移動各裝置時，請不要過分施加力量。**
・否則將會導致發生事故或破損。

禁　止

●**在移動前方組裝時，請勿持著槍支組裝進行作業。**
・否則將會導致人員受傷或發生事故與破損。

●**移動本產品時，請不要過分施加力量。**
・否則將會導致發生破損或故障。

●**移動及超越高低差異處時，請務必兩四個人以上抓好把手處搬動。**
・否則會導致因該裝置跌倒而發生事故或破損。

●**移動各裝置時，請不要對開閉部位與可動部位施加過分的壓力。**
・否則將會導致人員受傷或發生事故與破損。

有關廢棄事項

●**在廢棄本體或是零件時，本產品的所有者請負責將本產品以產業廢棄物進行廢棄。同時，出貨時的捆包材料請遵守當地的規定進行廢棄。**

CHINESE

CHINESE

敬請遵守

●本產品的設置、使用等方法等請務必按照本書記載的順序和內容安全進行。
●請不要撕去貼在產品上的“警告”和“注意”標簽。
●不要在間接相當於警告或注意事項的條件下進行設置。
●轉讓等變更本產品的所有權時，務請將本書轉交給新的所有者。

■ 警告標簽等的張貼位置

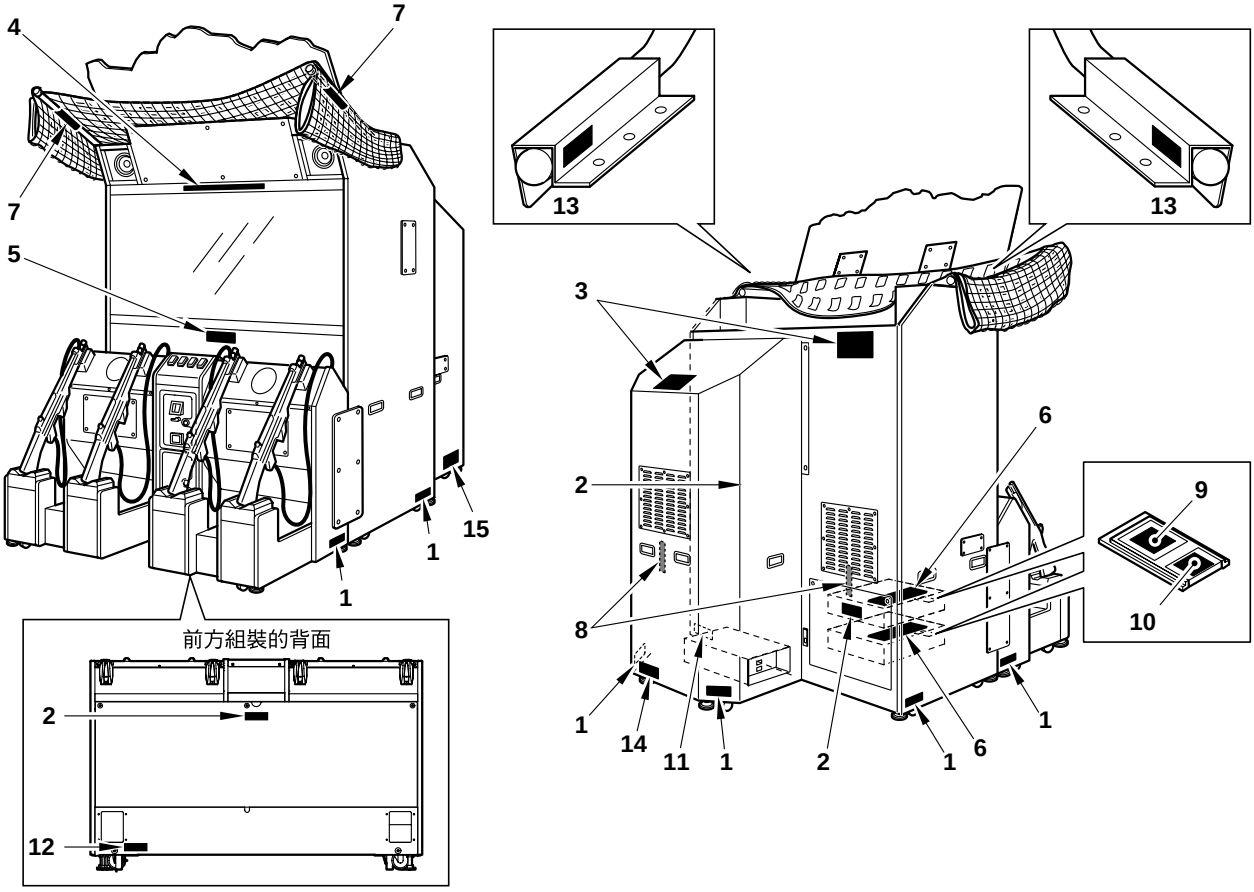

■警告標簽等的種類

1

⚠ WARNING

Ensure all leg levellers are securely set and game cabinet is level.

PN.0000036360

2

⚠ WARNING

ELECTRICAL SHOCK HAZARD. DO NOT OPEN EXCEPT FOR SERVICE.

PN.0000032450

3

⚠ 警告(けいこく) WARNING

悪い例／BAD!

良い例／GOOD!

押す方向によっては転倒する場合があります。
本ユニットを移動させるときは、必ず図の方向で押してください。また、斜面を移動するときや段差を乗り越えるときは、必ず2人以上で行ってください。

Unit may fall if you push or truck from the wrong side. To move the unit, please push as indicated in the picture. When moving it on a slope or getting it over a level difference, be sure to take the buddy system.

PN.0000061561

4

⚠ CAUTION DO NOT STRIKE THE GLASS SURFACE. DOING SO MAY CAUSE ACCIDENT OR INJURY.

PN.0000186572

5

⚠ CAUTION

Please do not play this game if

- you have been drinking.
- you are tired are sick or have been recently sick.
- you think you might be pregnant.
- You are susceptible to muscle spasms or loss of consciousness due to sound, light or moving pictures.
- Your exercise is medically regulated.

PN.0000189983

6

⚠ 注 意 (ちゅうい) / CAUTION

PN.0000112088

7

⚠ Please don't hang on this bar.

PN.0000106031

8

⚠ HAZARDOUS VOLTAGE HAZARDOUS VOLTAGE

PN.0000049570

9

ADAPTER

HANDLE WITH CARE

PN.0000088991

10

BIGGER MEMORY CARD REQUIRED BY ARROW

MEMORY CARD 128MB

PN.0000124371

11

Weight 205kg(452lb)

PN.0000045483

PN.0000045483

12

Weight 92kg(203lb)

PN.0000128087

PN.0000128087

13

Weight 8kg(17lb) PIPE×2 6kg(13lb) NET ×1 2kg (4lb)

PN.0000128074

PN.0000128074

14

Weight 108kg(238lb)

PN.0000128086

PN.0000128086

15

MODEL	GMC22-HD WORLDCOMBAT
POWER	220 V / 50 Hz 350 W
MANUFACTURER	KONAMI CORPORATION
DATE OF MANUFACTURE	December,2002
WEIGHT	413kg(910.5lb)
SERIAL NUMBER	

KONAMI MADE IN JAPAN INDOOR USE

•15不重新發行。

CHINESE

1 規　　格

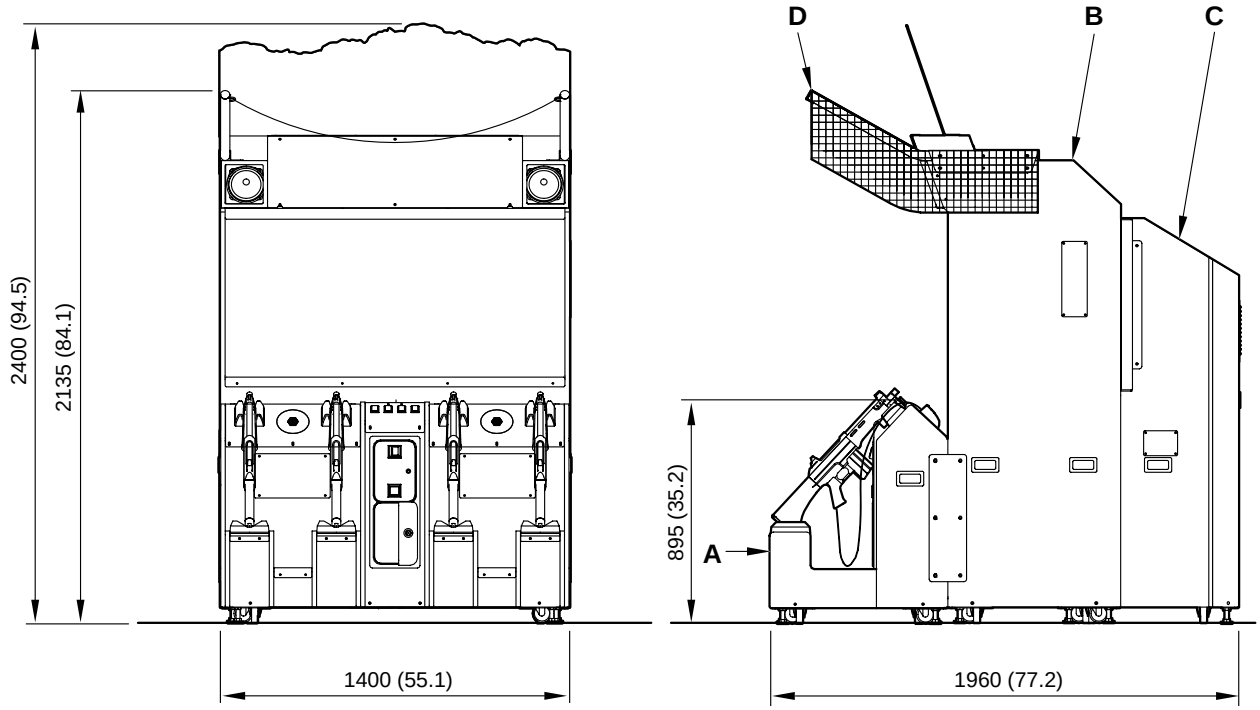

規　　格	
外形尺寸	參閱上圖　mm(in)
重量	總重量：約 413 kg (910.5 lb)（腳踏薄板除外） **A.** 前方組裝：約 92 kg (203 lb)　**B.** 中央組裝：約 205 kg (452 lb) **C.** 後方組裝：約 108 kg (238 lb)　**D.** 網狀組裝：約 8 kg (17 lb)
額定消耗電力	350W
顯示屏	29英吋顯示屏（2台）
使用條件	溫度10~35℃(33~95℉)　濕度20~70%（不可結霜）

●因提高產品性能等理由，本產品的規格不經預告可能有所變更。

CHINESE

■有關搬運與設置的尺寸

為便於搬進本裝置，門口的尺寸大小需按下列所示進行。

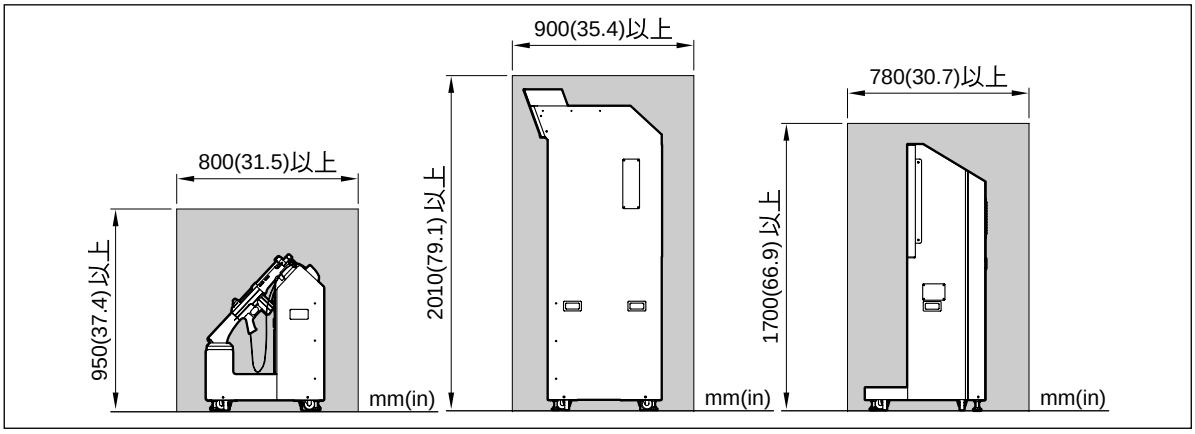

設置本產品時，請確保以下空間。

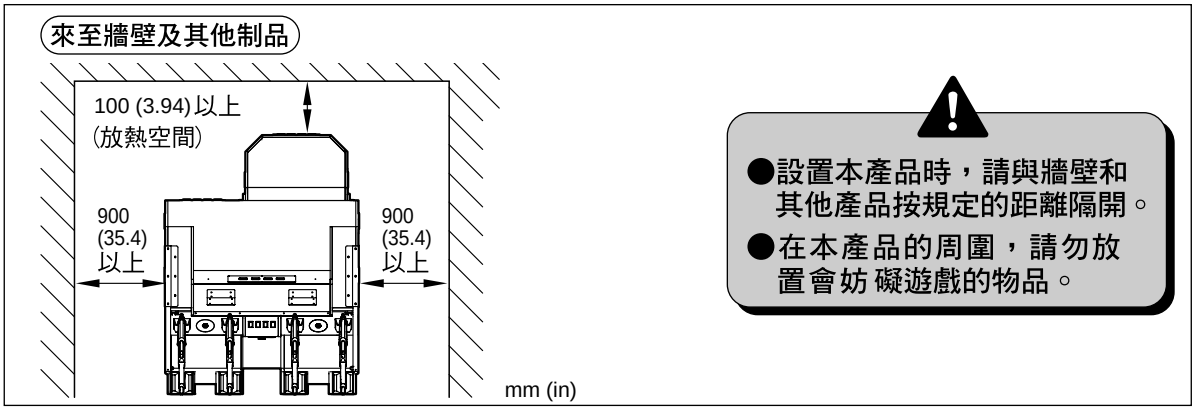

●設置本產品時，請與牆壁和其他產品按規定的距離隔開。
●在本產品的周圍，請勿放置會妨礙遊戲的物品。

移動本產品時，請按以下方法進行。

●在移動本產品時，請務必事先拆解前方組裝和槍支組裝、以及後部組裝後再行作業。
●移動各裝置時，請不要過分施加力量。
●移動各裝置時，請不要對開閉部位與可動部位施加過分壓力。
● 移動及超越高低差異處時，請務必兩四個人以上抓好把手處搬動。
●在移動前方組裝時，請勿持著槍支組裝進行作業。

●中央組裝和後方組裝，請務必遵照圖示方向進行推壓。

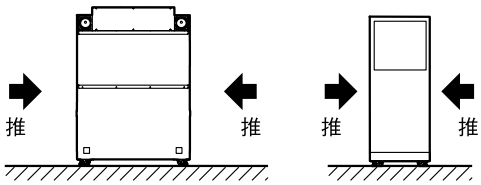

●在抬舉中央組裝時，需要六個人以上，後方組裝則需四個人以上，並務必手持把手或底部。

中央組裝 : Approx.205kg (452lb)
後方組裝 : Approx.108kg (238lb)

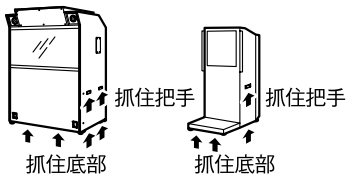

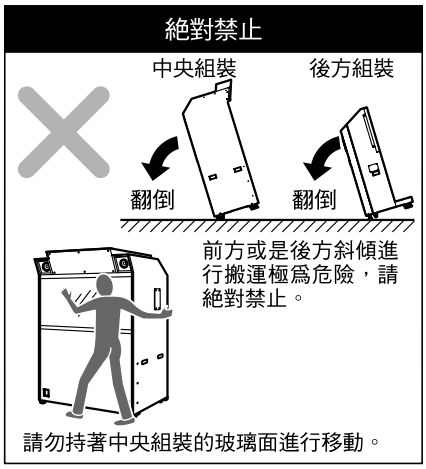

CHINESE

2 Contents of the product

List of parts

Make sure the following parts are all in the product.

NAME	QTY	NAME	QTY	NAME	QTY
Front unit	1	Net unit	1	Memory card (C22 *02) •The *-marked code may differ by the shipment period of the product.	2
Center unit	1	Billboard fixtures	2	Connecting plate	2
				Hexagon socket button head screws (M8x30L)	16
Rear unit	1	Billboard	1	Cross recessed head screws (M6x15L)	28
		AC power cord (Approx.3m)	1	Plain washer (nominal diameter 6)	12

•If any part is defective or not found, contact your nearest dealer.

Accessories

Make sure the following accessories are all in the product.

NAME	QTY	NAME	QTY
Instruction manual (This manual)	1	Coin door key	2
ATTENTION!!!	1	Hexagon wrench (width across flats : 5 mm)	1
Maintenance door key	2		

•If any part is defective or not found, contact your nearest dealer.

Tools necessary for set up job

⊕screwdriver (#2)	Grounding band (To be worn for anti-static measure in handling the machine components and making the memory card settings)
Wrench (24 mm width across flats) (required to fix the adjusters)	Stepladder

3 Names of parts

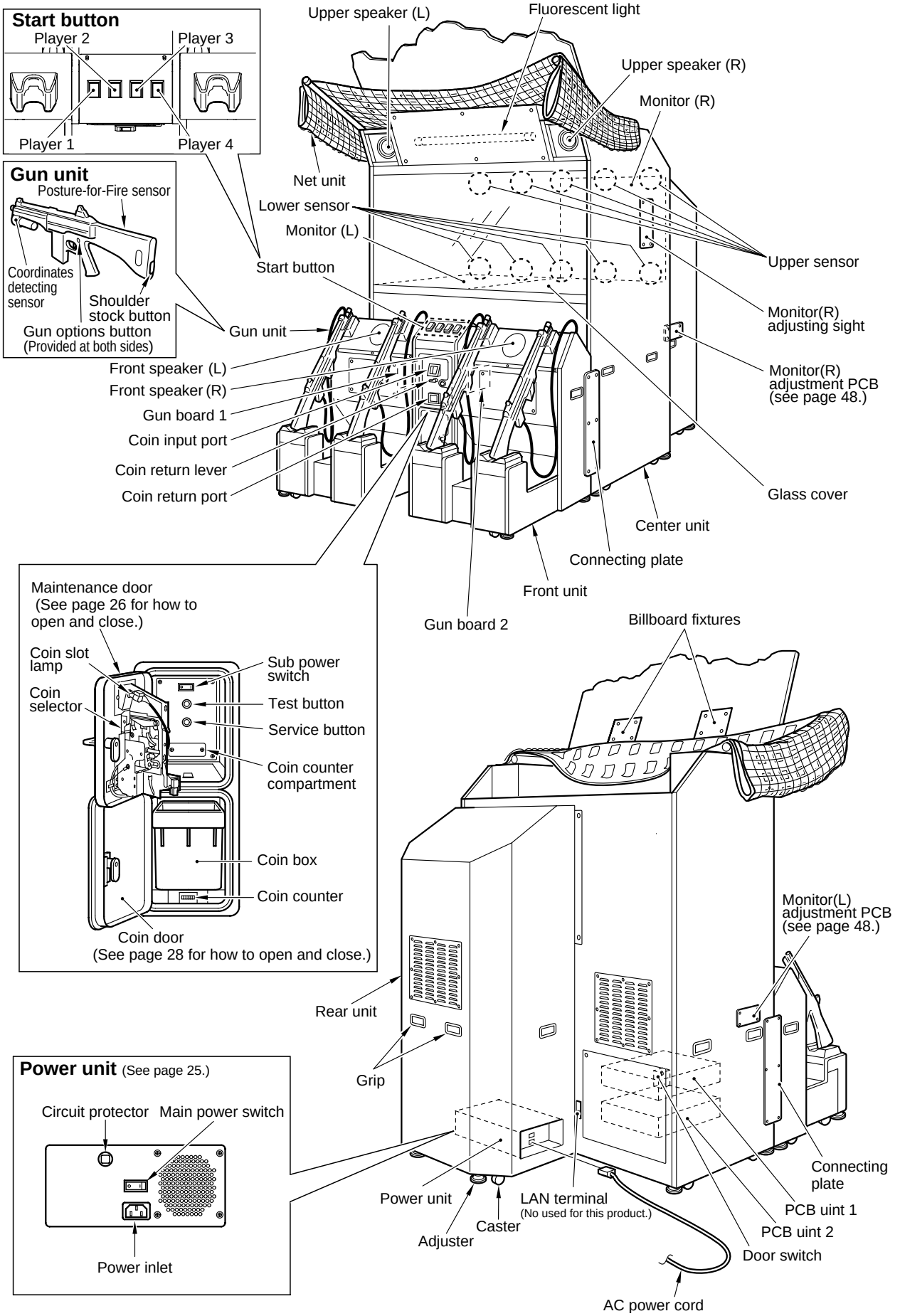

3-1 Power unit

Power unit

The power supply unit is found at the backside of the rear unit.

- **Be sure to use the attached AC power cord.**
- **Be sure to ground to the machine.**
- **There is high voltage inside the machine. Only the qualified industry specialist is allowed to open the back door. With the back door open, be very careful not to touch the monitor and its nearby parts.**
- **If the sub power switch of the service panel is turned OFF without turning OFF the main power switch of the power unit, some parts in the units remain live. When opening the back door, be sure to turn OFF the main power switch and unplug the power cord from the receptacle.**

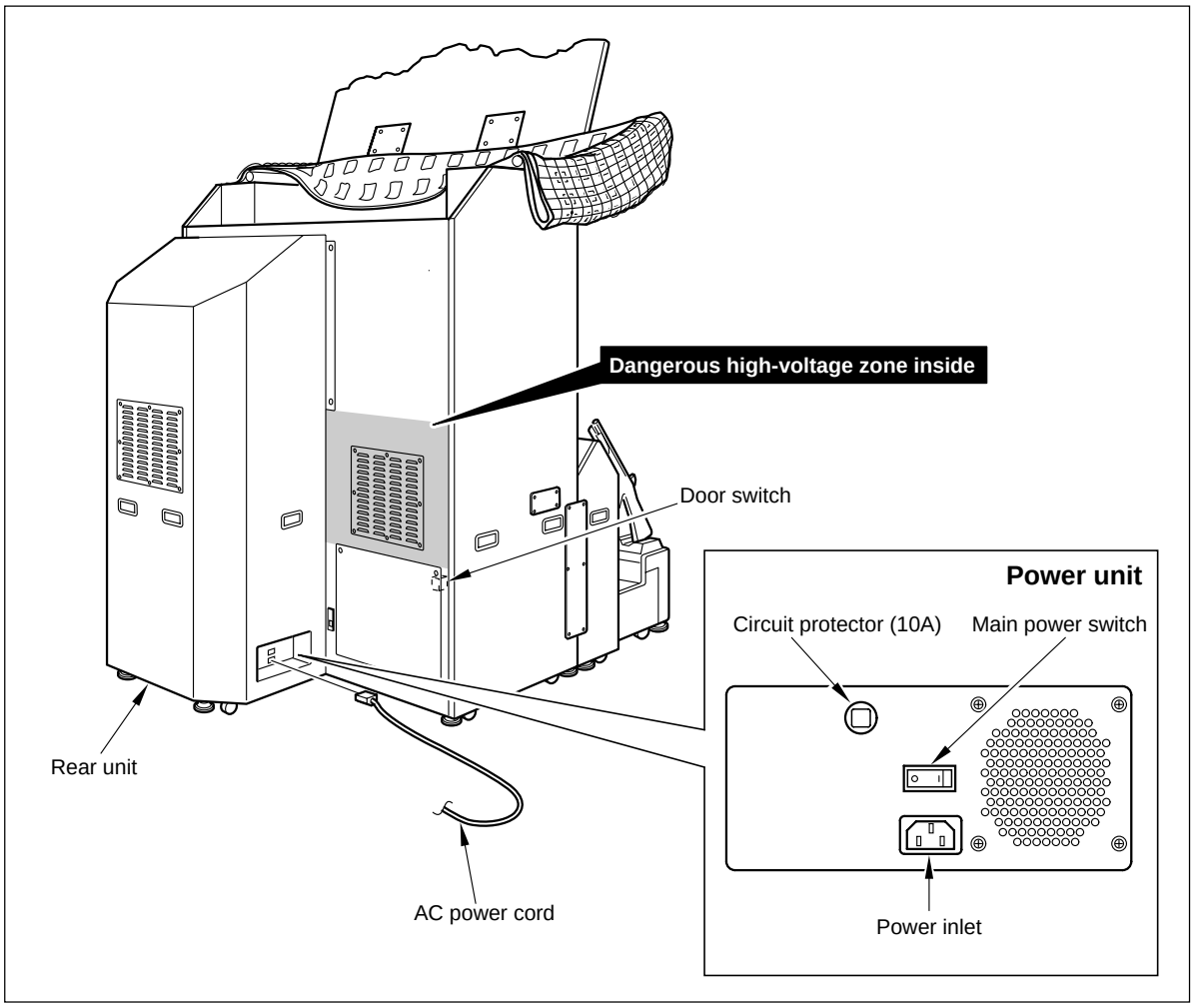

3-2 Opening and closing the maintenance door

How to open the maintenance door

- **Take care not to apply any load or impact to the maintenance door when it is open.**
- **After closing the maintenance door, be sure to check that the door is locked securely.**

1 Insert the accompanying maintenance door key and turn itclockwise.

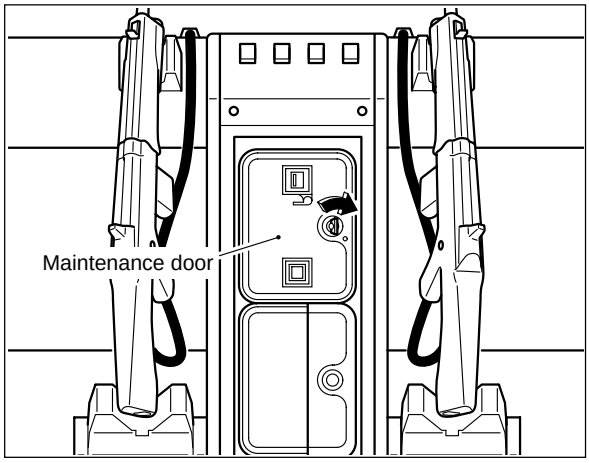

2 Open the maintenance door.

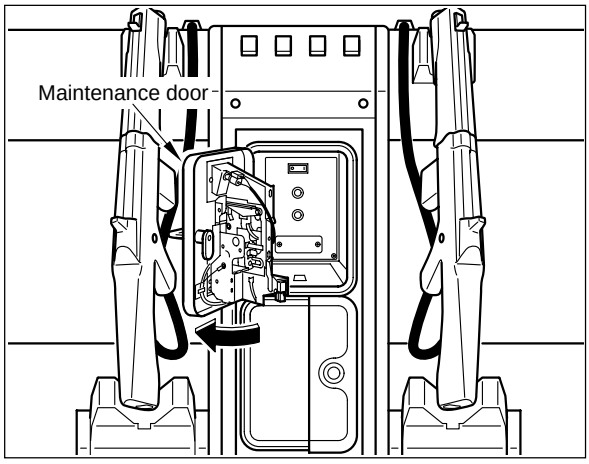

How to close the maintenance door

1 Close the maintenance door.

2 Turn the maintenance door key counterclockwise and draw it out.

3-3 Service panel

■Service panel

Using the accompaying maintenance key, open and detach the maintenance door to access the service panel inside.

•Take care not to apply any load or impact to the maintenance door when it is open.
•After closing the maintenance door, be sure to check that the door is locked securely.

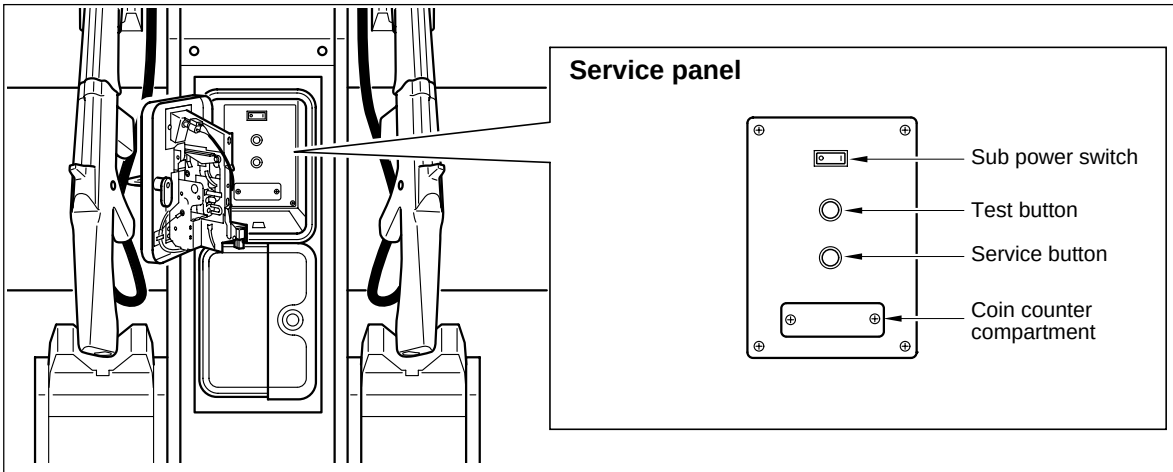

•Test button
When this button is pressed while the power is turned ON, the mode changes to TEST MODE. (See page 32.)
(To return it to the game mode, select the “GAME MODE” from the “MAIN MENU”.)

•Service button
When this button is pressed while the power is turned ON, the credit appears, enabling the test play.
(The coin counter will count nothing and nothing is recorded in the “BOOKKEEPING”. The current number of credits is displayed on the screen.)

3-4 Opening and closing the coin door

Opening and closing the coin door and removing the coin box

•Take care not to apply any load or impact to the coin door when it is open.
•Securely lock the door for protection against burglaries.
•Note that the coin box is considerably heavy to take out if it is full of coins.

1 Insert the attached coin door key in the coin door and turn it clockwise.

2 Open the coin door and take out the coin box.

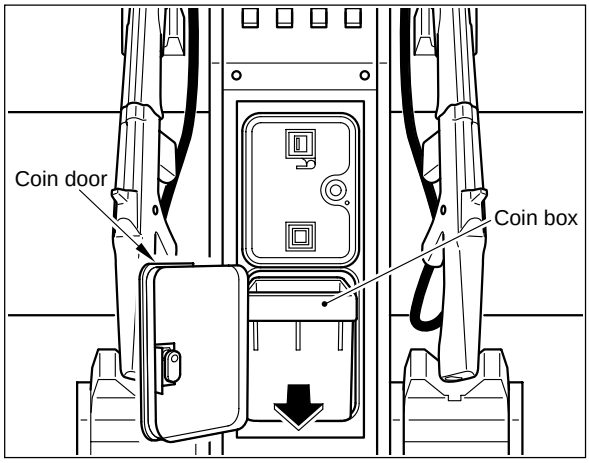

Coin counter

You will find the coin box when the coin door is opened.
The coin counter is located under the coin box.

•To move the coin counter onto the service panel, see page 68.

MEMO

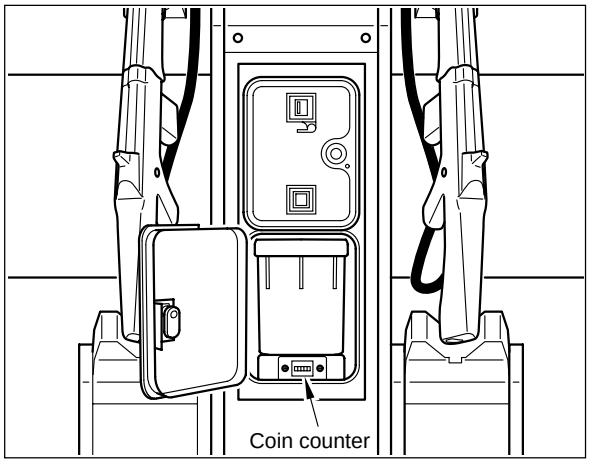

4 How to play

This product gives a lively entertainment of soldier gun-shooting simulation game, which can be competed by maximum 4 players at a time. The player can aim at an enemy in the distance by viewing through a sighting telescope with use of the “Posture-for-Fire System” of the gun unit. The player can attack an enemy in various ways by using the “Machine gun” and “Rocket launcher” that appear when the enemy is shot. Furthermore, by directing the gun unit toward the outside of the display screen, the gun is reloaded with bullets and at the same time, a shield to protect the player from enemy’s bullets appears.
Find out the enemy and recapture the territory that has been occupied once by enemy, in various ways of attack and defense.

How to play

1. Put coin(s) in the slot, press the start button, and the start demonstration appears and “Posture-for-Fire System Explanation” starts. Up to 4 persons can simultaneously enjoy themselves in playing the game. In addition, another player can participate in the game halfway.

2. Then, “Nickname Selection” starts. Out of the nicknames displayed on the screen, aim at and shoot a desired nickname by the gun for selection.

3. After the selection of nickname, “Operations Explanation” starts.
The player is given the knowledge about the number of all stages and the rule of the game as well as the details of operations.

4. After the explanation of operations, the game starts.

- Each one of the life points is lost whenever a soldier gets attacked by enemy.
  Moreover, one life point of all the soldiers participating in the combat will be lost unless the operations are executed successfully within the preset time for each stage.
- If the player achieves brilliant results in the combat, he or she can be promoted to higher “Rank”.
  If a soldier is wounded by bullet of enemy, one life point is lost and at the same time the player is demoted down one rank as well.
  When “CONTINUE” is selected, you will be demoted three ranks.
- When the operations for each stage have been executed completely, the score of the game being still in progress is displayed.
  If plural numbers of players participate in the game, the top-ranking player becomes the leader and is given the life point bonus.
- If a bullet hits the “Enemy” , “Combat Vehicle” or “Enemy Shell”, score is added.
- If the player successfully hits enemies continuously, additional scores are accumulated.
- If the player hits an enemy in the head, he or she can gain additional score.
- “Weapon Item” and “Life-up Item” comes out from shot-down enemy.
  The player can obtain the items when he or she hits them.
  - ·Machine gun ..... Can shoot continuously.
    (The number of bullets is limited and it cannot be reloaded.)
  - ·Rocket launcher ... Can destruct tanks and combat helicopter by single shot.
    (The number of bullets is limited and it cannot be reloaded.)
  - ·Life-up ..... Increases by one life point.

5. The game is over when the life point becomes “0”.

- The “Result Report” appears after game-over or game-clear, and the evaluation of team’s fighting power is displayed.

How to Operate the Gun Unit

The player can reload the rifle by directing it to the outside of the screen.
Similarly, by directing it to the outside of the screen, a shield appears in front of the player by which he or she can protect against attack from enemy.

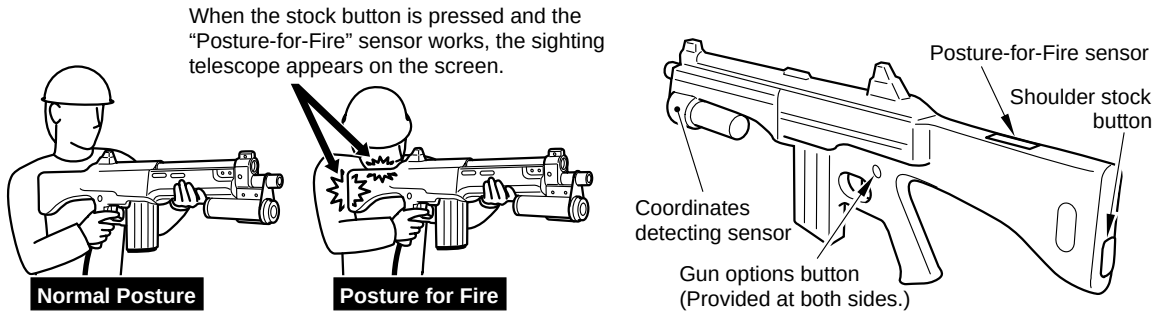

When the "GUN OPTIONS" button is pressed, item changes to the one that has been obtained, and it can be used for different purposes depending on the content of the game. If plural items have been obtained, one item changes to another each time the button is pressed.

Joining the game halfway

Another player can participate in the game halfway at any time during play.

Standing the gun unit

Set the gun unit correctly in position.

Proper placement of the gun units

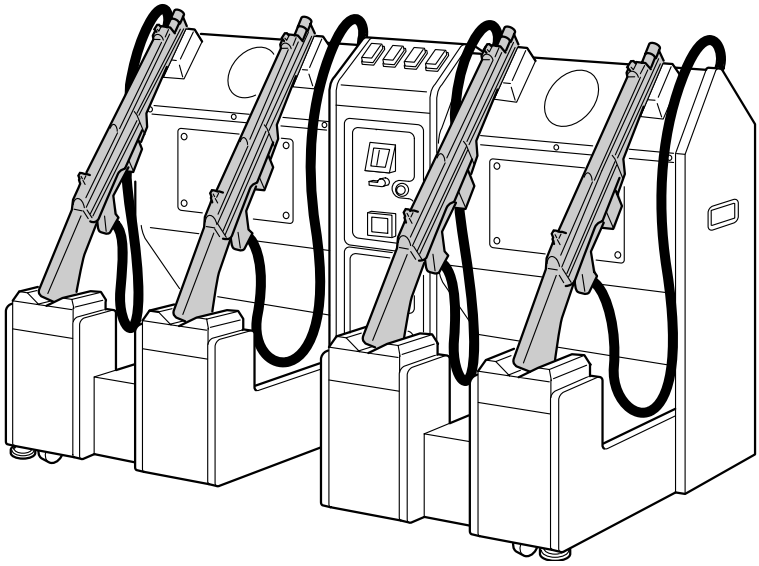

Continuation of the game

The continuation of the game is accepted for 20 seconds after the end of the game.
(The time for acceptance of the continuation can set by the procedure of "GAME OPTIONS" is page 42).

Event mode

By selecting a desired one out of 11 stage modes memorized in the "EVENT MODE" of the "GAME OPTIONS", this product can provide a mode suitable to the event or competition organized by customer. (See page 42.)

5 Game settings

5-1 Checking the game start up

■ When the power ON after installation of machine, the selfdiagnostic test will get started. The test results will be displayed on the screen. If the power is not turned ON, make sure that the main power switch and sub power switch are all at the ON position. (See page 25,27.)

•Do not change the DIP switch setting of this product to other than factory setting.
•If an abnormality persists or the machine does not operate properly, immediately turn OFF the main power switch, unplug the power cord from the receptacle and contact your nearest dealer.

■ Result of test

If test is OK

·The machine goes to the game mode and the demonstration game gets started. If "BAD" or "ERROR" appears onscreen, take proper measures, referring to "9-6 Troubleshooting" on page 76.

■ Setting the time

If the timer is not set yet in the "CLOCK", the following message appears on the screen.

PLEASE SET THE CLOCK BEFORE OPERATION.
PRESS TEST BUTTON = MAIN MENU

Press the test button, and the "MAIN MENU" screen shows up instead in the test mode. Select the "CLOCK" screen and set the time. Without this setting, the above message appears each time the machine gets started.

■ Making the gun calibration setting

If calibration of the gun has not yet been made by "GUN CHECK", the following massage appears on the screen. (Since the calibration of the gun has been made at the time of shipment, this indication will not appear.)

PLEASE CALIBRATE GUN.
PRESS TEST BUTTON = MAIN MENU

When the test button is pressed at this time, the indication changes to "MAIN MENU" of "TEST MODE". Then, calibrate the gun by "GUN CHECK" of "I/O CHECK". (See page 35.)
If gun calibration has not yet been made, the above-mentioned message appears whenever the game is started.

■ When two or more machines are installed

This product employs infrared sensors. When more than 2 machines are installed, change the ID of gun sensor operating frequency by "GUN CHECK" of "I/O CHECK" in test mode in order to prevent interference between the side-by-side machines. (See page 35.)

5-2 Setting and adjustment of game mode

Manually check and change the settings for the screen displays and game contents and change them as required.

Starting the test mode

1 Turn ON the power switch.
2 While the demonstration game is playing, press the test button on the service panel.
·The main menu is displayed on the screen.
The items are shown at the left screen. (Nothing appears at the right.)

•When the power is turned ON while keeping the test button pressed, the current settings and the all data recorded in the “RANKING DATA” and “BOOKKEEPING” are deleted to return to their factory settings.

MEMO

Quit the test mode

1 Pull the trigger of Player 1 or Player 2 gun to select “GAME MODE” on the main menu screen.
2 Press the start button of the player 1.
·The screen goes back to the game mode.

Main menu screen (basic items)

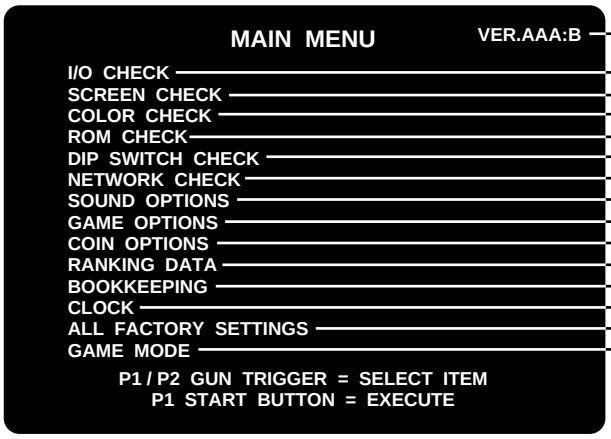

•This screen is just an example.

Displaying the products destination and version.	
Checking the controls and various lamps for lighting.	--> Page 33
Adjusting the screen distortion.	--> Page 37
Adjusting the display color.	--> Page 37
Checking the content of the ROM.	--> Page 38
Indicating the DIP switch settings.	--> Page 39
Checking the network.	--> Page 40
Setting various sound options.	--> Page 41
Setting various game options.	--> Page 42
Setting various coin options.	--> Page 43
Setting, checking and deleting the ranking data.	--> Page 43
Displaying the bookkeeping information of coins.	--> Page 44
Setting the current clock time.	--> Page 47
Other settings than for “Gun Operating Frequency”, “Calibration of Gun”, “BOOKKEEPING” and “RANKING DATA” are reset to their factory settings.	--> Page 47
Returning to game mode.	

•If the system clock has not been set, “>” and “<” start flashing at both ends of “BOOKKEEPING” to prompt you to set the clock.
•If gun calibration has not yet been made, “>” and “<” flicker on both sides of the “I/O CHECK” screen to prompt you to make gun calibration.

MEMO

Selecting each mode

How to select each mode from the main menu
·SELECT --> Pull the trigger of Player 1 or Player 2 gun.
·SET --> Press the start button of the player 1 .
For details on the modes, refer back to the reference pages listed above.

5-3 Mode descriptions

■ The original factory settings are displayed in green; the changed settings are displayed in red.

·To change the preset value, pull the gun trigger of Player 1 or Player 2 to select the desired item and press the start button of Player 1.

·After the setting has been changed, select “SAVE AND EXIT” and press the start button for entry.

“NOW SAVING” will appear, the modified settings will be saved, and the screen returns to the main menu.

·If “EXIT” is selected after the modification of the settings, the following message will appear.

YOU DID NOT SAVE. DO YOU WANT TO SAVE? [YES/NO]

Pull the gun trigger of Player 1 or Player 2 to make selection of “YES/NO” and press the start button of Player 1 for entry.

If “YES” is selected, the new settings will be saved with “NOW SAVING” displayed and the screen will return to the main menu.

If “NO” is selected, the message “NO MODIFICATION” will appear, the modified settings will not be saved, but the main menu will show up again on the screen.

•If “FACTORY SETTINGS” is selected and the start button of player 1 is pressed, all the setting of the mode will be returned to the factory setting.

MEMO

I/O CHECK

Checking the controls and various lamps for lighting

■ Mode for checking the buttons, input of sensors and lighting of lamps.

The items are shown at the left screen. (Nothing appears at the right.)

Select the item(s) to be checked by pulling the gun trigger of Player 1 or Player 2, and press the start button of Player 1 to change the item(s). Then, checking item(s) appears (appear) on the screen.

To return to the “MAIN MENU” screen, select “EXIT” and then press the start button of Player 1.

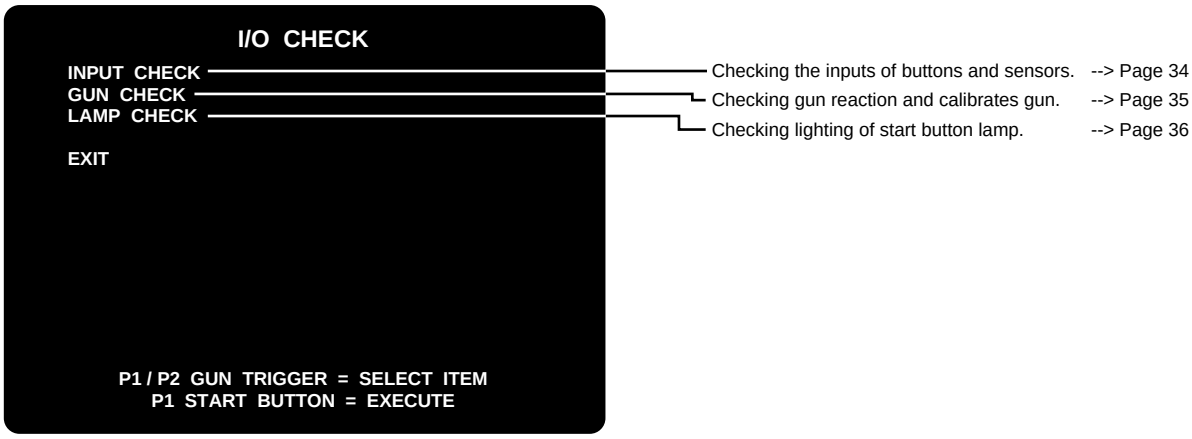

•This screen is just an example.

INPUT CHECK

Checking the inputs of buttons and sensors

■Mode for checking the buttons and sensors.
The items are shown at the left screen. (Nothing appears at the right.)
This screen is intended to see whether the inputs of these controls are on or off.
To return to the “I/O CHECK” screen, press the start button of Player 1 while pulling the gun trigger of Player 1.

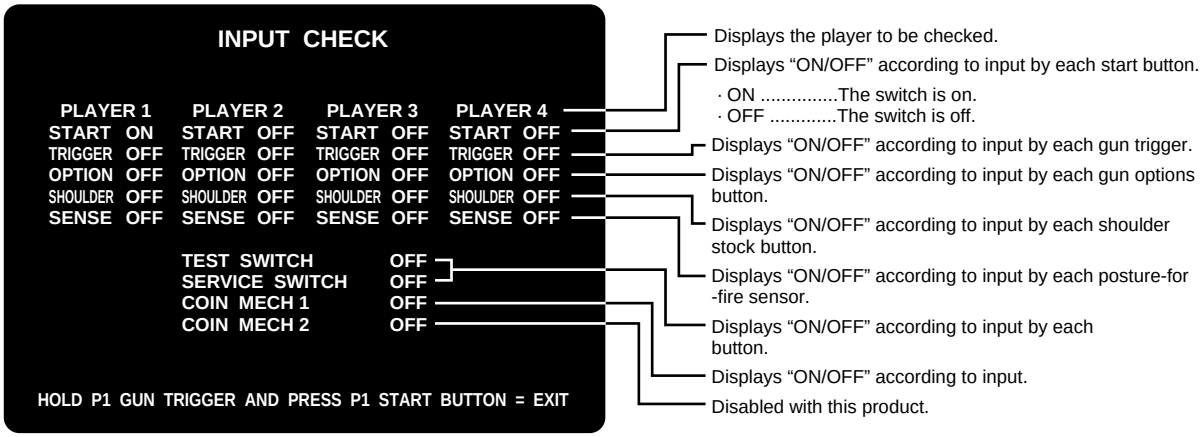

•This screen is just an example.

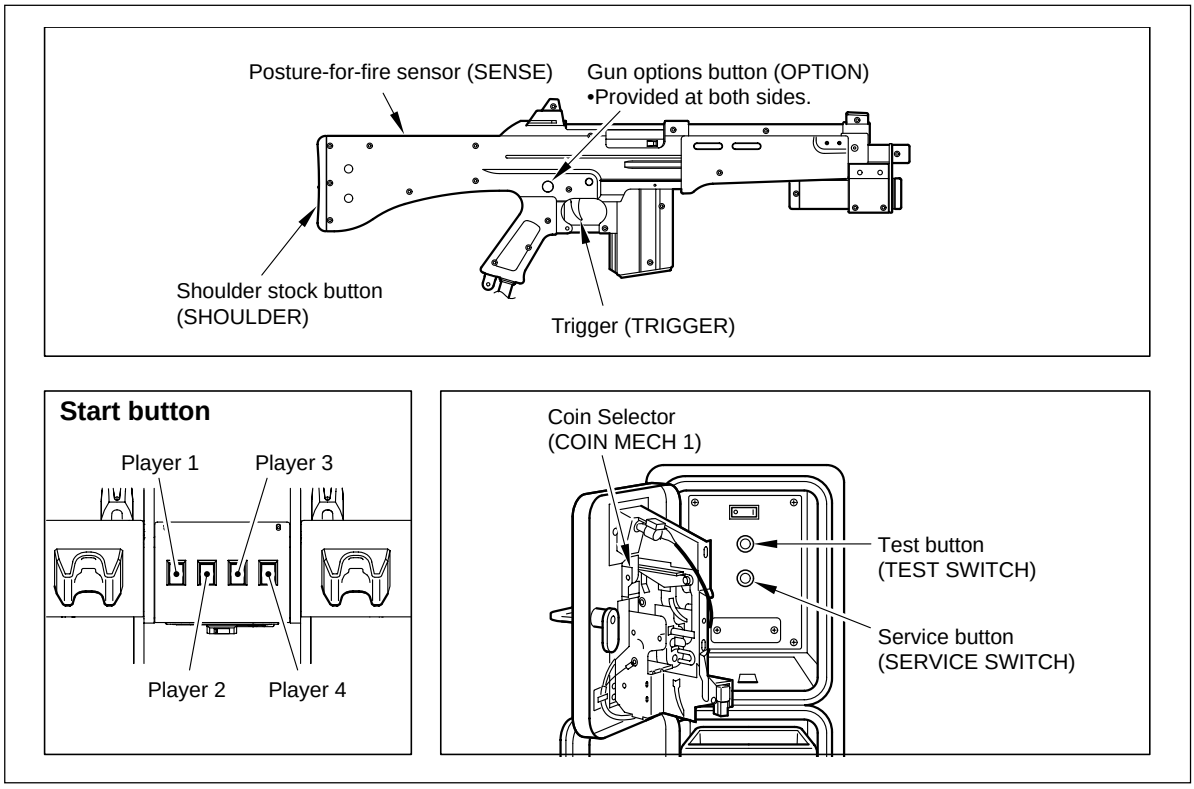

GUN CHECK

Checking the gun reaction and sighting

■Mode for checking the reaction and sighting of gun.
The reaction of gun can be checked by pulling the trigger.
To return to the “I/O CHECK” screen, press the start button of Player 1.

- **After the gun unit has been repaired or replaced, be sure to calibrate the target points.**
- **Make exact calibration, because otherwise the game may fail to play properly.**
- **Carry out calibration for all of the guns.**

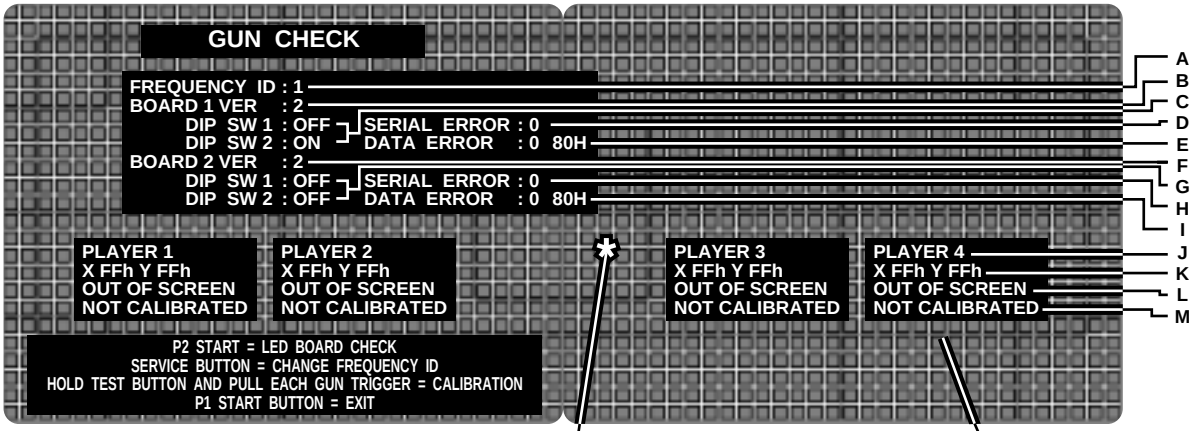

•This screen is juast an example.

Left screen

Point the gun to the screen and the hit position is marked with “✱”. The “✱” mark remains on the screen. (The bullet mark will disappear automatically.)
The hit position “✱” and the bullet mark “✱” are different in color from player to player.
Player 1 : Red **Player 2 : Blue**
Player 3 : Green **Player 4 : Yellow**

Right screen

Check the reaction of gun in the green frame. (Although it may not react near a frame, it does not have influence on a game play.)

A : Changing the gun sensor operating frequency ID. There are 2 kinds of frequency IDs, namely, “0” and “1”. When more than 2 machines are installed, interference between them can be prevented by such IDs. ID can be changed by pressing the frequency change service button.
B : Displaying the version of gun board 1.
C : Displaying the setting of DIP switches on the gun board 1.
D : Displaying the frequency of error in data communication between gun board1 and PCB unit 1. Make sure that the number does not increase frequently. (Watch for 1 minute or so to make sure there are less than 3 errors.)
E : Displaying the frequency of error in data reception between gun board 1. When an error occurs, a 2-digit hexadecimal error code appears after the error number.
F : Displaying the version of gun board 2
G : Displaying the setting of DIP switches on the gun board 2.
H : Displaying the frequency of error in data communication between gun board 2 and PCB unit1. Make sure that the number does not increase frequently. (Watch for 1 minute or so to make sure there are less than 3 errors.)
I : Displaying the frequency of error in data reception between gun board 2. When an error occurs, a 2-digit hexadecimal error code appears after the error number.
J : The following K, L and M status are displayed for each of the Player 1 thru Player 4 gun units.
K : Coordinates in which each gun is aiming is displayed here in hexadecimal notation. The values change within the range of “00h to ffh” for X (in horizontal direction) and Y (in vertical direction). If the player aims at the outside of the screen, “ffh” is displayed.
L : This message is displayed when the player aims at the outside of the screen.
M : This message is displayed when the calibration setting of gun has not yet been made. If this setting has not been made, a message appears at each start up to prompt you to make this setting.

■Making the gun calibration setting
When the trigger of any one of the guns is pulled, the following message is displayed and the screen changes to calibration mode.

P1 CALIBRATION <-- The message shown at left is for the calibration of the gun of Player 1.

At this time, when the player aims at 5 blue "O" marks appearing one after another on the screen and pulls the trigger, the gun is calibrated correctly and the screen returns to automatically to "GUN CHECK".
Carry out the calibration for all of the guns of Players 1 to 4.

■Checking the Sensors (LED board)
When the start button of Player 2 is pressed on the "GUN CHECK" mode screen, the screen changes to sensor (LED board) check mode screen. Point the gun unit to the center of the screen, and check to see if each of the 10 sensors around the screen unit gets activated.
To return to the "GUN CHECK" screen, press the start button of Player 1.

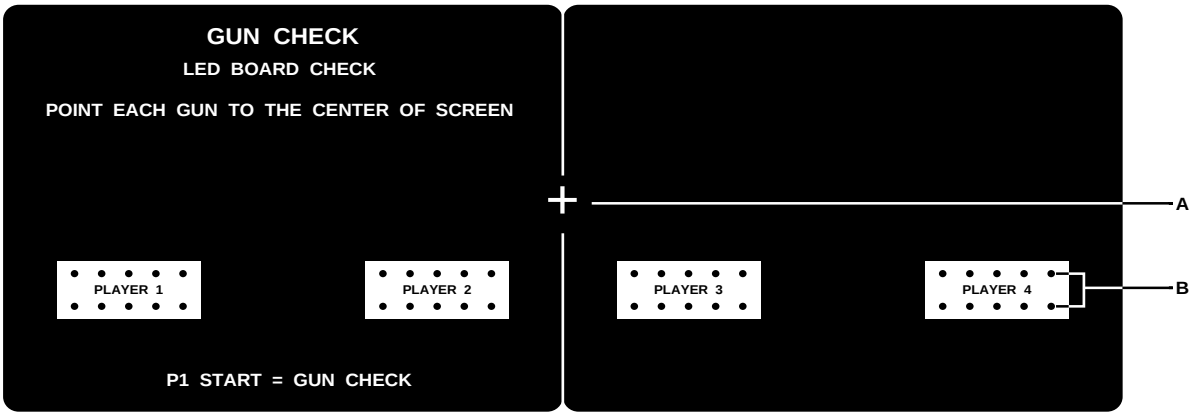

•This screen is juast an example. **Left screen** **Right screen**

A : "+" mark is displayed at the center between the two screens. Direct the gun unit to this mark and make sure all the 10 sensors are marked "O" in orange. And move the gun unit outside the screen and make sure all the 10 sensors are now marked "O" in black.
B : Reaction of each of the guns of Players 1 to 4 is displayed here. Active sensor is displayed by "O" in orange, while non-active sensor is displayed by "O" in black.

LAMP CHECK

Checking the start button light-up

■Mode for checking the lighting of the start button lamps.
The items are shown at the left screen. (Nothing appears at the right.)
When checking item is selected by pulling the gun trigger of Player 1 or Player 2, "OFF" on the screen changes to "ON" and at the same time the related start button lights up. To return to the "I/O CHECK" screen, press the start button of Player 1.

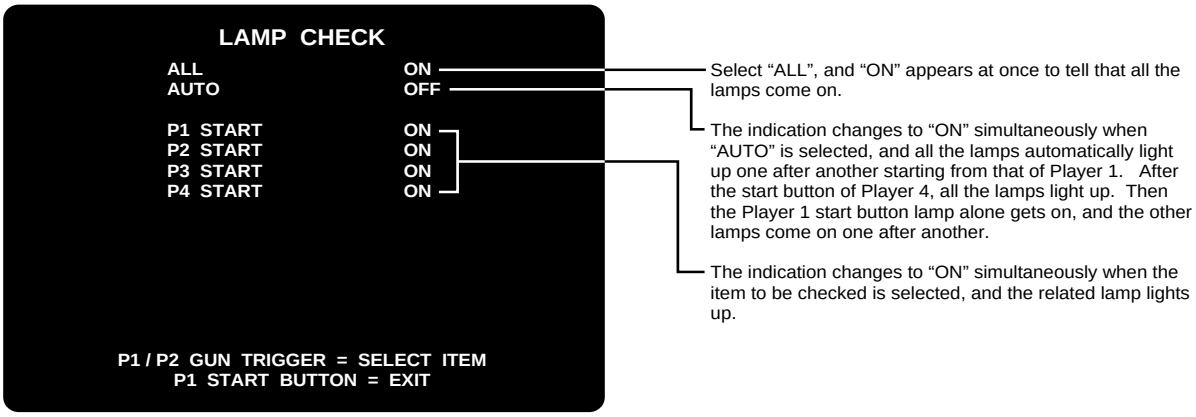

•This screen is juast an example.

SCREEN CHECK

Adjusting the screen distortion

■Mode for checking the screen display.
Adjust the size and vertical as well as horizontal displacement of the image, as required, on the screen while watching the crosshatch pattern. Use the monitor adjustment PCB to make adjustments. (See page 48.)
Adjust both the right and left screens. When the start button of Player 1 is pressed, the screens change as below.

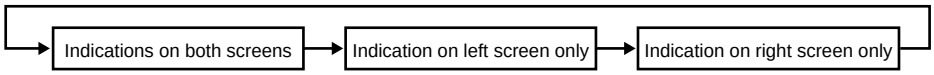

To return to the “MAIN MENU” screen, press the start button of Player 1.

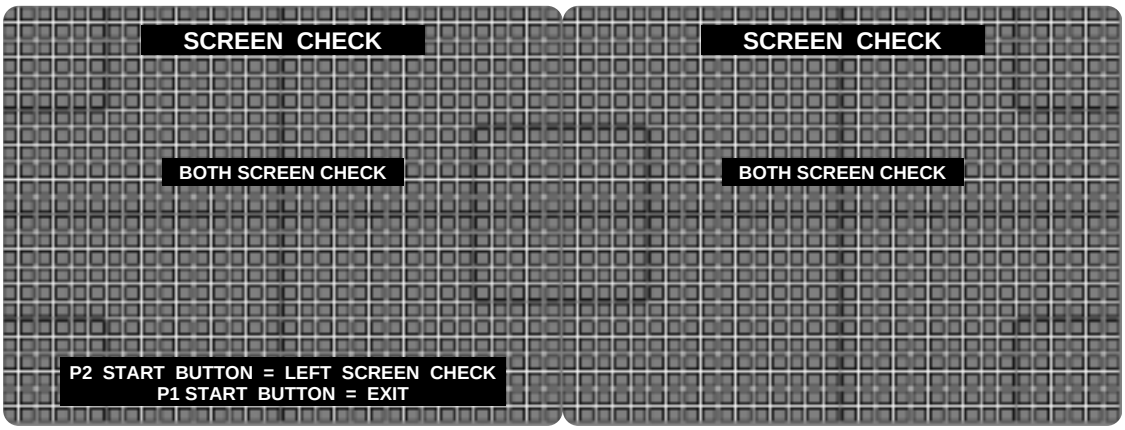

•This screen is juast an example. **Left screen** **Right screen**

COLOR CHECK

Adjusting the display color

■Mode for checking the display color.
Make the adjustment using the monitor adjustment PCB so that the colors of the color bars should appear properly graded and the background should become black sufficiently. (See page 48.)
At the same time, adjust the gradation in the range of ▲ “COLORLESS” so that it is darkened. Adjust also the color balance between the right and left screens.

ROM CHECK

Checking the content of the ROM

■Mode for checking the memory card ROM.
Check the memory cards (ROMs) which are set at PCB unit 1 and PCB unit 2. “OK” appears when they work normally and “BAD” appears if they are abnormal. Checking of PCB unit 1 is displayed on the left screen and that of PCB unit 2 is displayed on the right screen.
Press the start button of Player 1 to interrupt checking or return to the main memu screen.

•This screen is juast an example. **Left screen (PCB unit 1)** **Right screen (PCB unit 2)**

A : Countdown starts from 100 and checking is completed at the count of “0”.

When the disk media have been completely checked, “OK” appears.

OK

If checking is interrupted, “ABORTED” is displayed.

ABORTED

If anything wrong is in the check results, “BAD” appears.

BAD

•If “BAD” is indicated, turn OFF the power switch and turn it ON again. If “BAD” still appears, immediately turn OFF the main power switch, unplug the AC power cord from the receptacle and contact your nearest dealer.

MEMO

DIP SWITCH CHECK

Indicating the DIP switch settings

■Mode for checking the setting of the DIP switches on the PCB unit 1 and PCB unit 2 . Be sure to set the DIP switches as follows. Checking of PCB unit 1 is displayed on the left screen and that of PCB unit 2 is displayed on the right screen.
To return to the “MAIN MENU” screen, press the start button of Player 1.

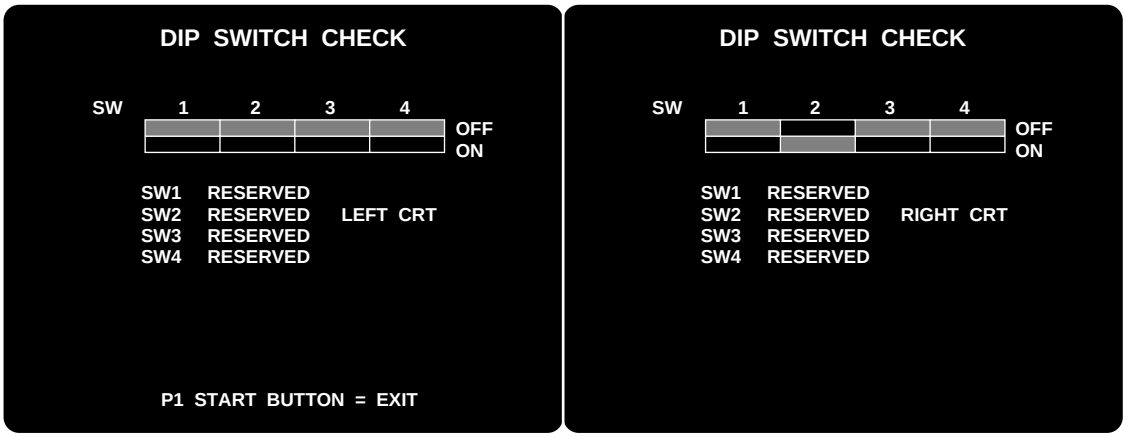

•This screen is juast an example. **Left screen (PCB unit 1)** **Right screen (PCB unit 2)**

PCB unit 1

DIP switch bit No.			
1	2	3	4
OFF	OFF	OFF	OFF

PCB unit 2

DIP switch bit No.			
1	2	3	4
OFF	ON	OFF	OFF

•Be sure to make the DIP switch settings as shown above. Otherwise, the machine fails to function even by turning ON the power switch.

MEMO

NETWORK OPTIONS

Checking the network

■Mode for checking the network between PCB unit 1 and PCB unit 2.
With the machine installed, be sure to check the network on this screen. The network performance of PCB unit 1 is displayed on the left screen and that of PCB unit 2 is displayed on the right screens.
To return to the “MAIN MENU” screen, press the start button of Player 1.

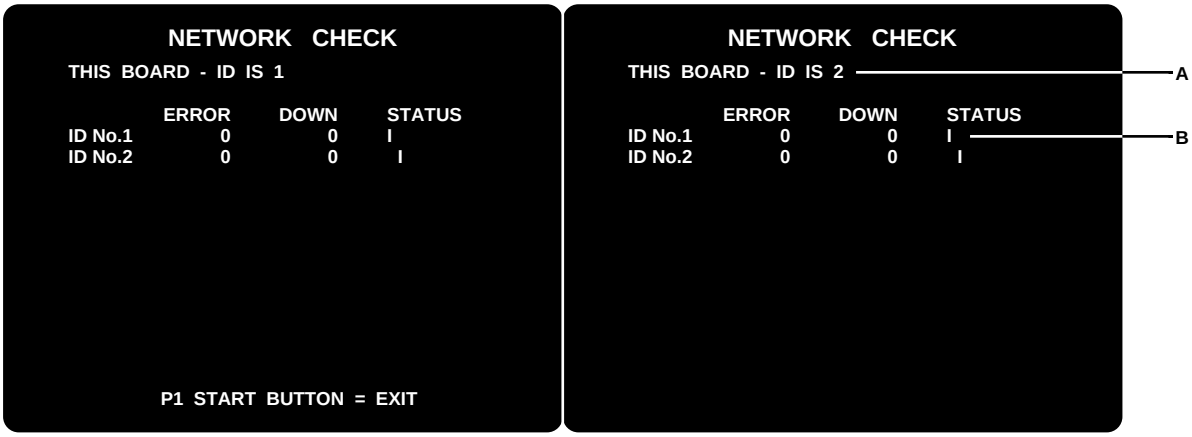

•This screen is juast an example. **Left screen (PCB unit 1)** **Right screen (PCB unit 2)**

A : Displaying network ID. (The figure shows ID:1 at left and ID:2 at right.)
B : Displaying the current status of network. When the network is connected, “I” mark moves from left to right.

Check items (Watch the screen for longer than 1 minute and make sure the following 4 conditions are met.)

·Check that the “I” mark in the STATUS column is moving from the left to the right at a fixed speed.
·Check that the value in the ERROR column is below “10” after one minute.
·Check that the value in the DOWN column does not change from “0”.
·The message “THIS BOARD ID IS 1” must be displayed on the left screen, and “THIS BORAD ID IS 2” must be displayed on the right screen.

SOUND OPTIONS

Setting various sound options

■Mode for setting and checking the sound options.
The items are shown at the left screen. (Nothing appears at the right.)
Pull the gun trigger of Player 1 or Player 2 to select the desired item and press the start button of Player 1 or Player 2.
To return to the “MAIN MENU” screen, select “SAVE AND EXIT” or “EXIT” and then press the start button of Player 1.

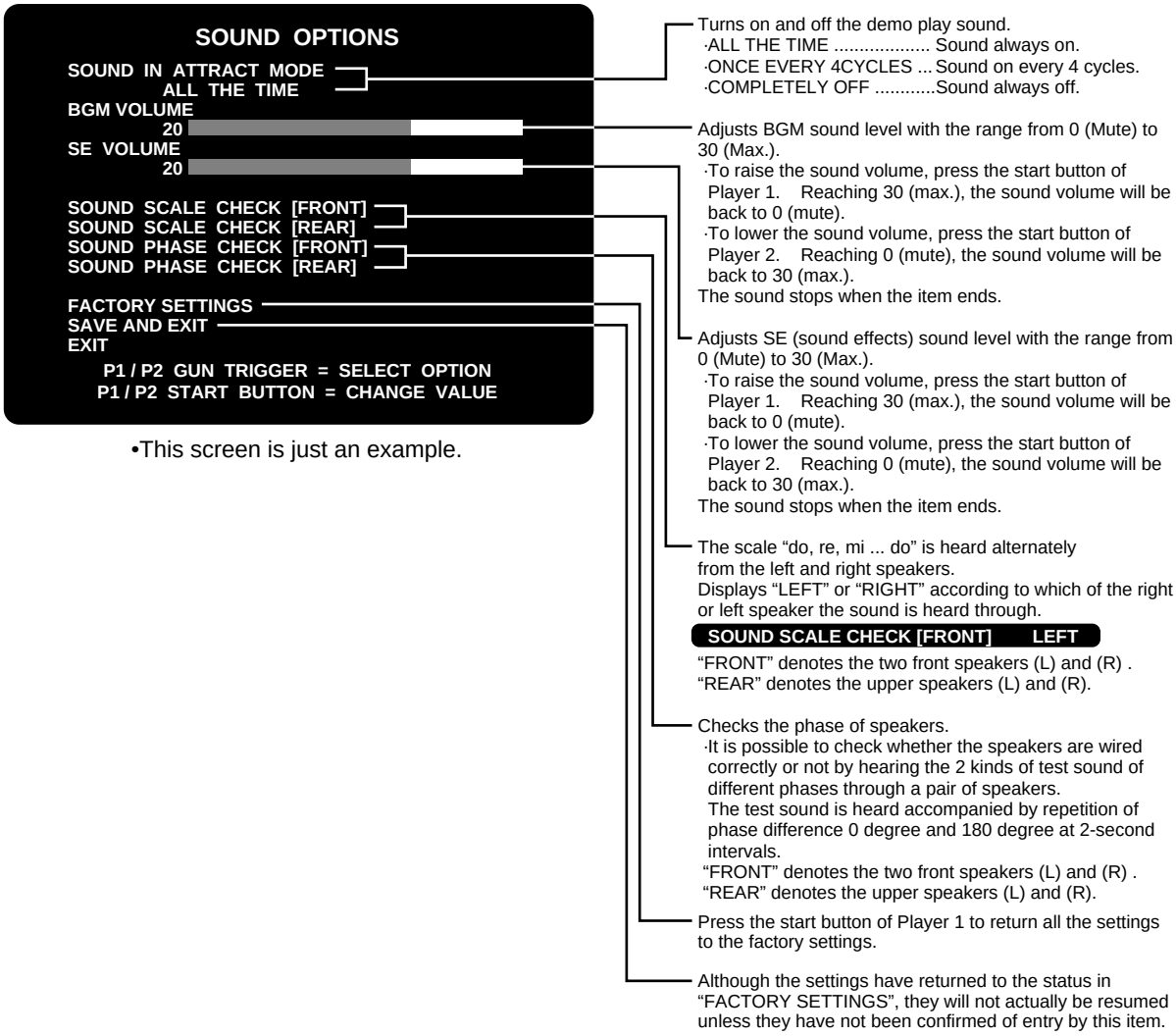

•This screen is just an example.

GAME OPTIONS

Setting various sound options

■Mode for setting and checking the game options.
The items are shown at the left screen. (Nothing appears at the right.)
Pull the gun trigger of Player 1 or Player 2 to select the desired item and press the start button of Player 1 or Player 2.
To return to the “MAIN MENU” screen, select “SAVE AND EXIT” or “EXIT” and then press the start button of Player 1.

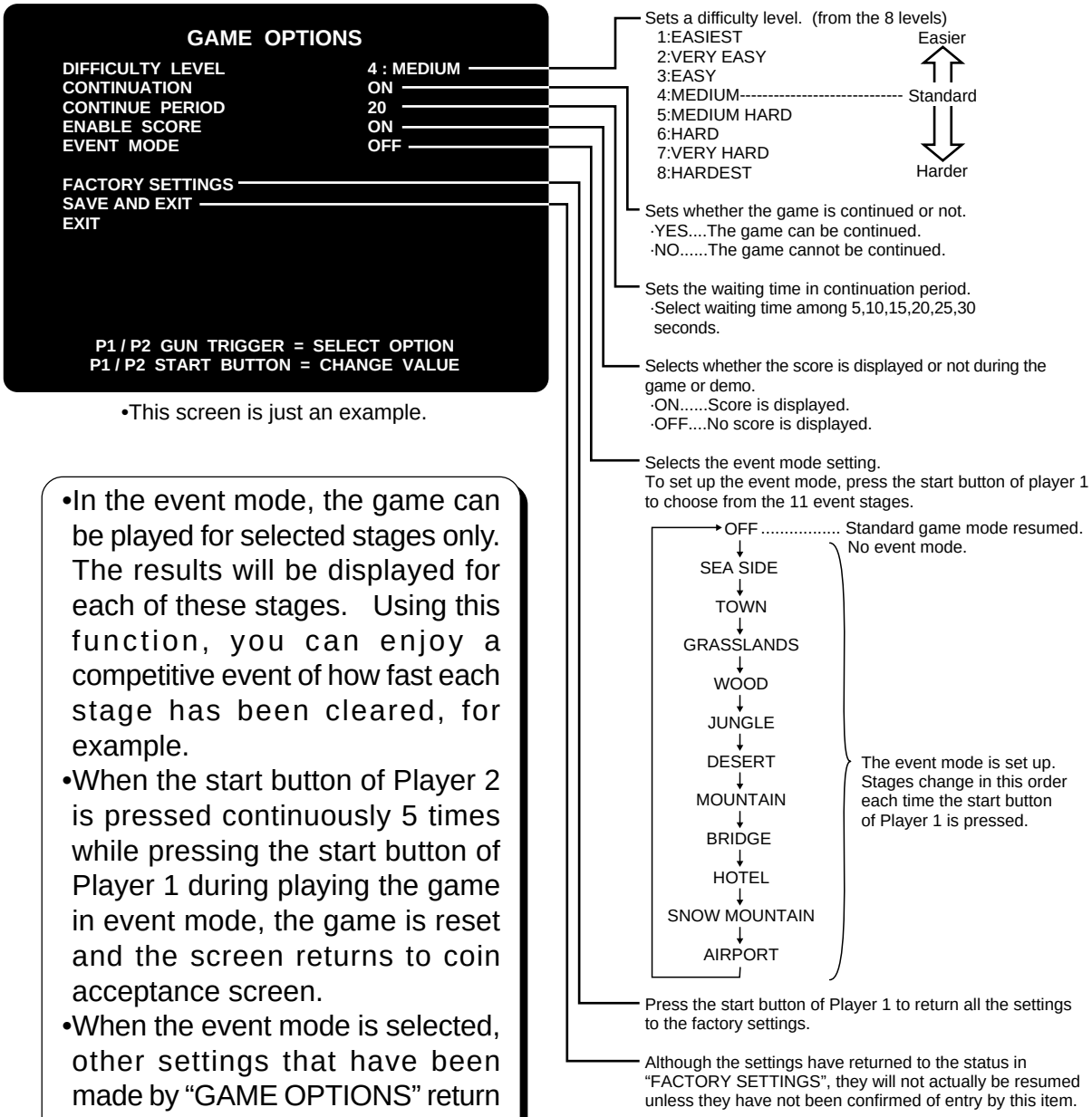

•This screen is just an example.

- In the event mode, the game can be played for selected stages only. The results will be displayed for each of these stages. Using this function, you can enjoy a competitive event of how fast each stage has been cleared, for example.
- When the start button of Player 2 is pressed continuously 5 times while pressing the start button of Player 1 during playing the game in event mode, the game is reset and the screen returns to coin acceptance screen.
- When the event mode is selected, other settings that have been made by “GAME OPTIONS” return to their factory settings.

MEMO

COIN OPTIONS

Setting various coin options

■Mode for setting and checking the coin options.
The items are shown at the left screen. (Nothing appears at the right.)
Pull the gun trigger of Player 1 or Player 2 to select the desired item and press the start button of Player 1 or Player 2. To return to the “MAIN MENU” screen, select “SAVE AND EXIT” or “EXIT” and then press the start button of Player 1.

•The coin setting options are not displayed when “FREE PLAY” is set to “YES”. In such case, remember the games will be free.

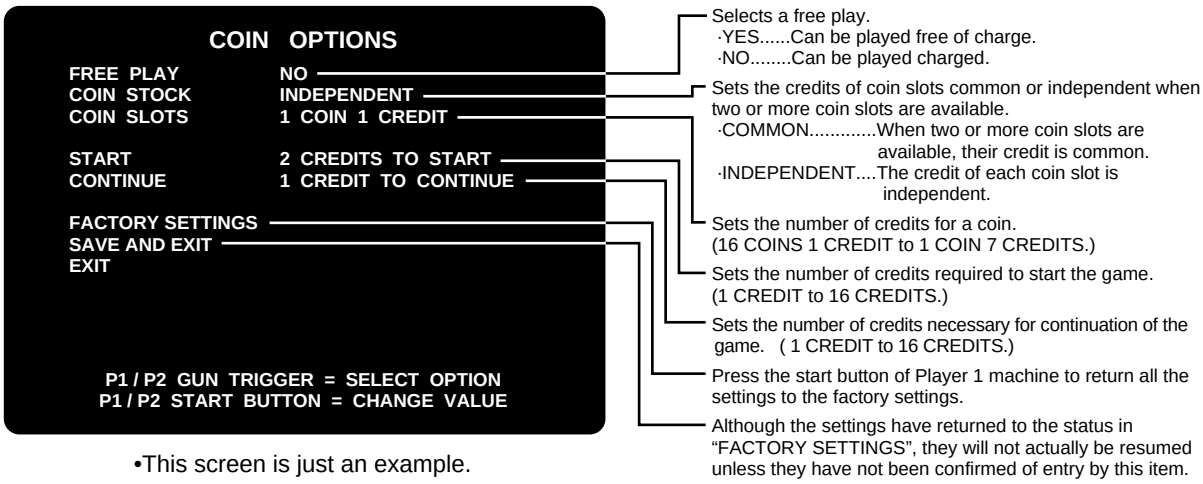

•This screen is just an example.

RANKING DATA

Setting, checking and deleting the ranking data

■Mode for setting, checking and deleting the ranking data.
The items are shown at the left screen. (Nothing appears at the right.)
As for the items followed by setting or deletion, pull the gun trigger of Player 1 or Player 2 to select item and press the start button of Player 1 or Player 2 to change or delete the content of setting. To return to the “MAIN MENU” screen, select “SAVE AND EXIT” or “EXIT” and then press the start button of Player 1.

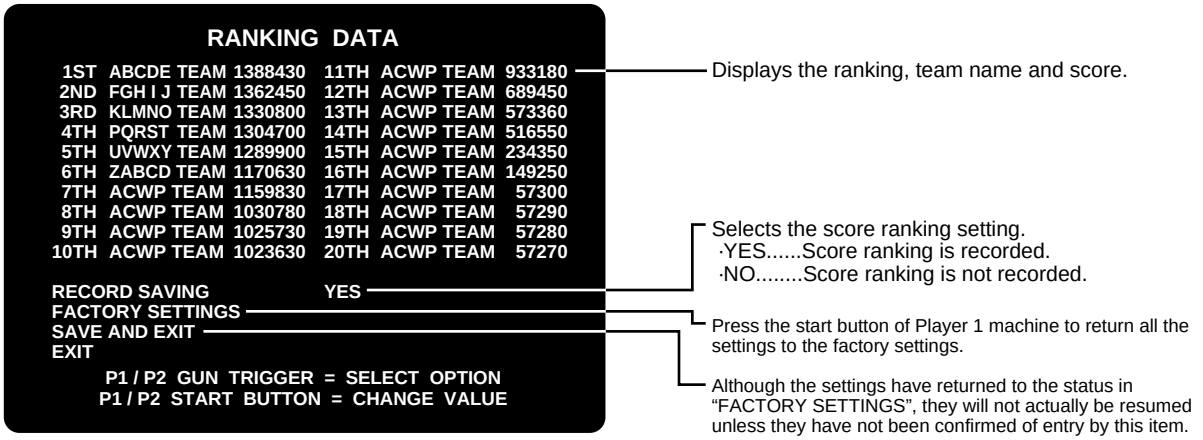

•This screen is just an example.

BOOKKEEPING

Displaying the bookkeeping information of coins

■Mode for displaying the total data on the number of coins put in the machine.
All data is displayed on the left screen. (Nothing appears at the right.)
If the time is preset on the “CLOCK” screen on page 47, the total data on the number of coins put into the machine can be checked. Pull the gun trigger of Player 1 or Player 2 to select the desired item and press the start button of Player 1 or Player 2.
To return to the “MAIN MENU” screen, select “SAVE AND EXIT” or “EXIT” and then press the start button of Player 1.

“BOOKKEEPNG” menu screen

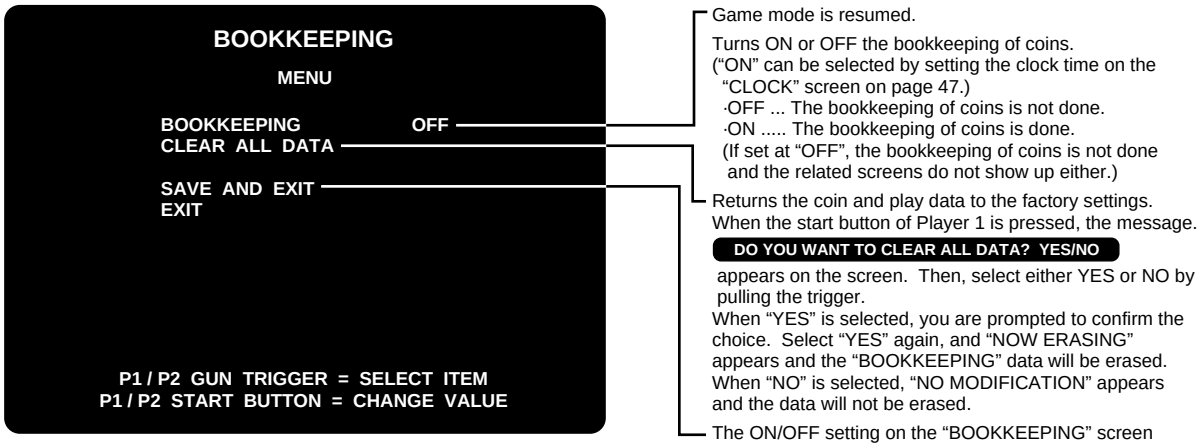

•This screen is just an example.

•Let’s suppose that the clock is not set yet (just after this product has been installed or initialized, for example). If you try to set “BOOKKEEPING” to “ON”, the following message appears onscreen to prompt you to set the clock. The bookkeeping screens cannot be opened. In such case, press the start button of Player 1 to clear this message and set the clock on the “CLOCK” screen. (See page 47.)

FIRST, SET THE CLOCK.
“CLOCK” ITEM IS IN MAIN MENU.
P1 START BUTTON = OK

MEMO

■When the time has been preset on the “CLOCK” screen as shown on page 47, the “BOOKKEEPING” item on the “BOOKKEEPING” menu screen can be turned ON. Now the following coin data and play data screens show up.
The screen changes in the order as below each time the gun trigger of Player 1 or Player 2 is pulled.
To return to the “BOOKKEEPING” menu screen, press the start buttons of Player 1 in individual display screen.
To return to the main menu screen, press the start button of Player 1 in invidual display screen.

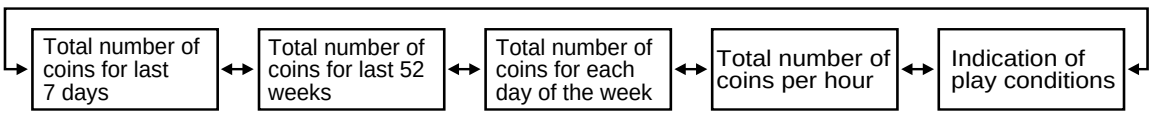

Screen of the total number of coins for last 7 days

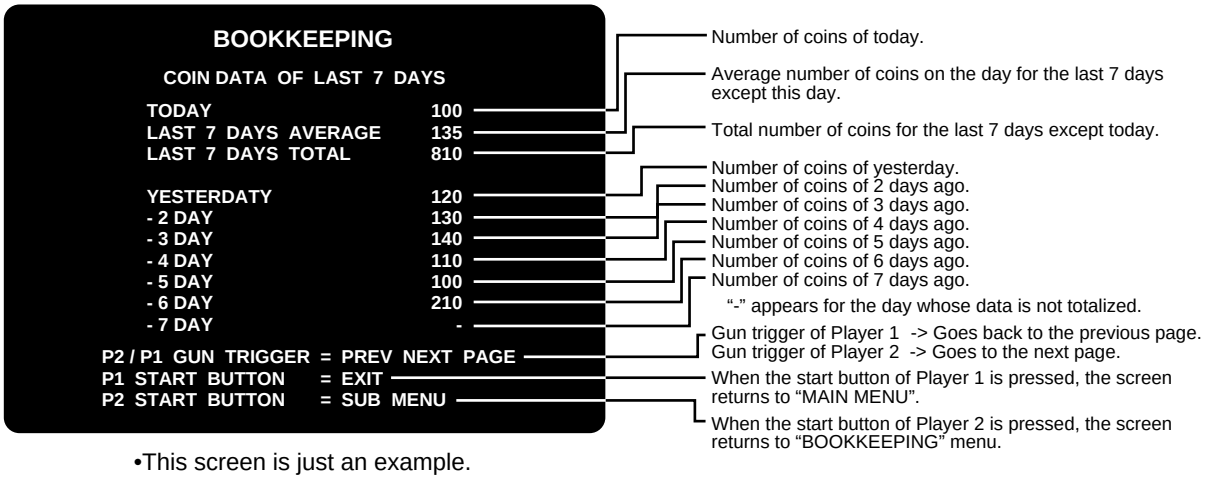

•This screen is just an example.

Screen of the total number of coins for last 52 weeks

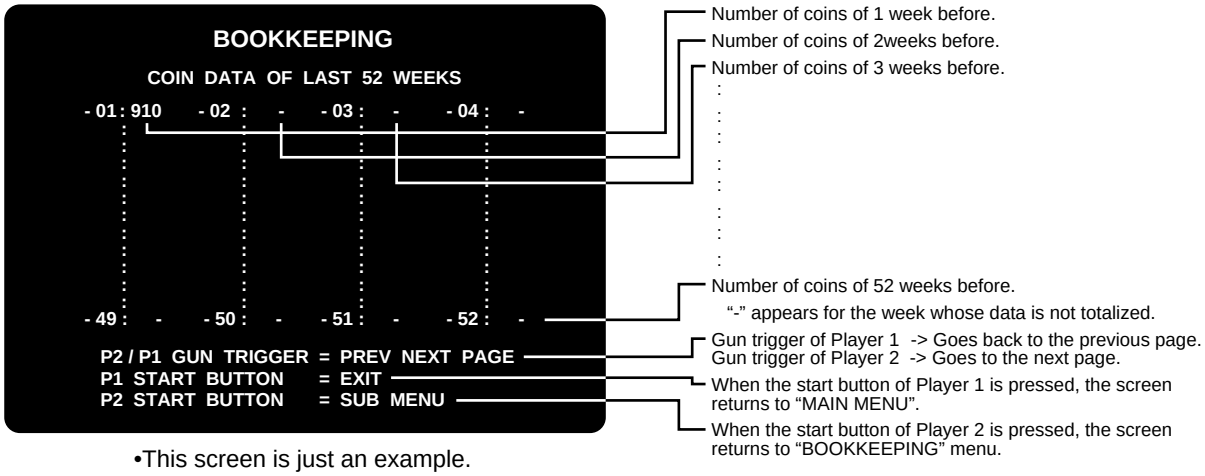

•This screen is just an example.

Screen of the total number of coins for each day of the week

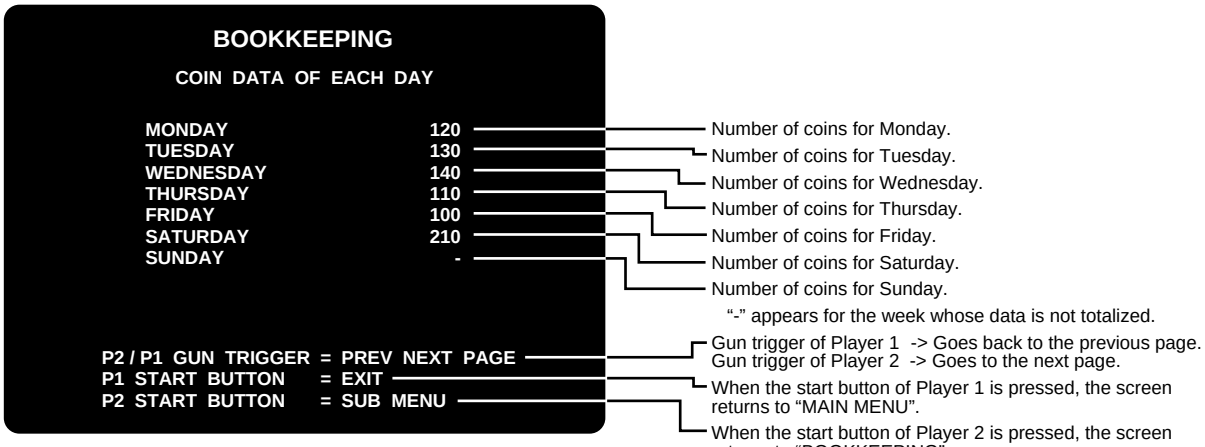

•This screen is just an example.

Screen of the total number of coins per hour

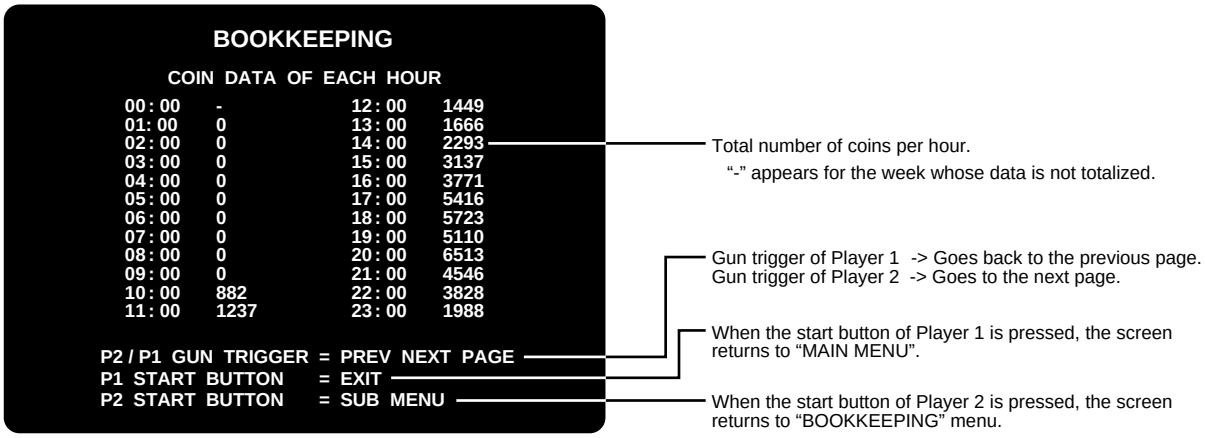

•This screen is just an example.

Screen of indication of play conditions

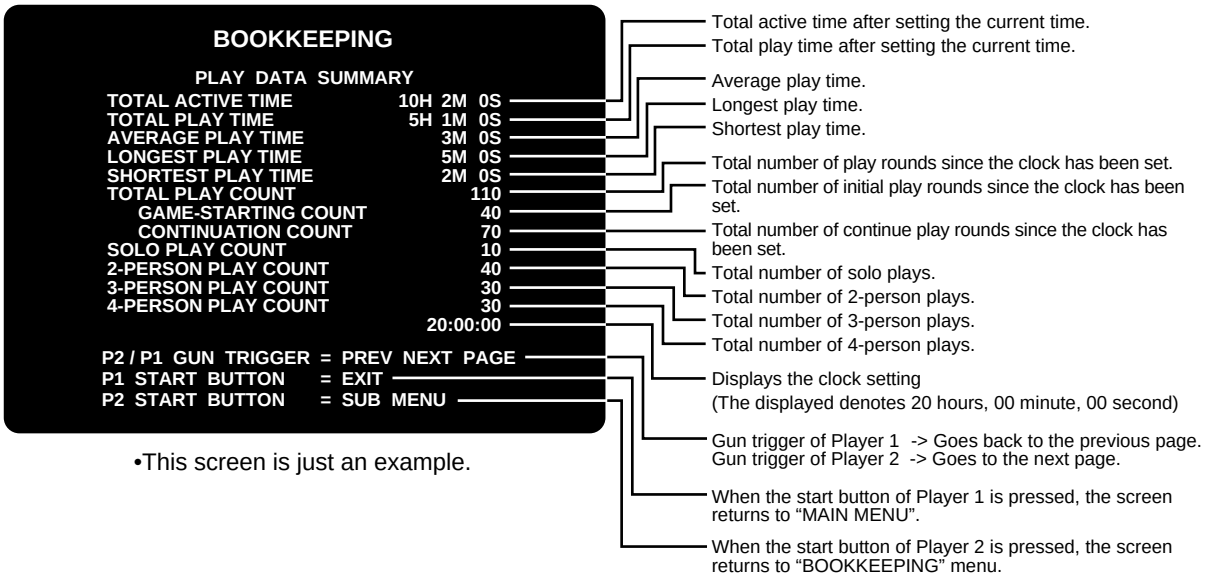

•This screen is just an example.

CLOCK

Setting the current clock time

■Mode for making the current clock settings.
The items are shown at the left screen. (Nothing appears at the right.)
Once the clock settings have been made here, the total coin data and play data can be viewed on the “BOOKKEEPING” screens. Pull the gun trigger of Player 1 or Player 2 to select the “hour”, “minute” and “second” and press the start button of Player 1 or Player 2 to set the current time.
To return to the “MAIN MENU” screen, select “SAVE AND EXIT” or “EXIT” and then press the start button of Player 1.

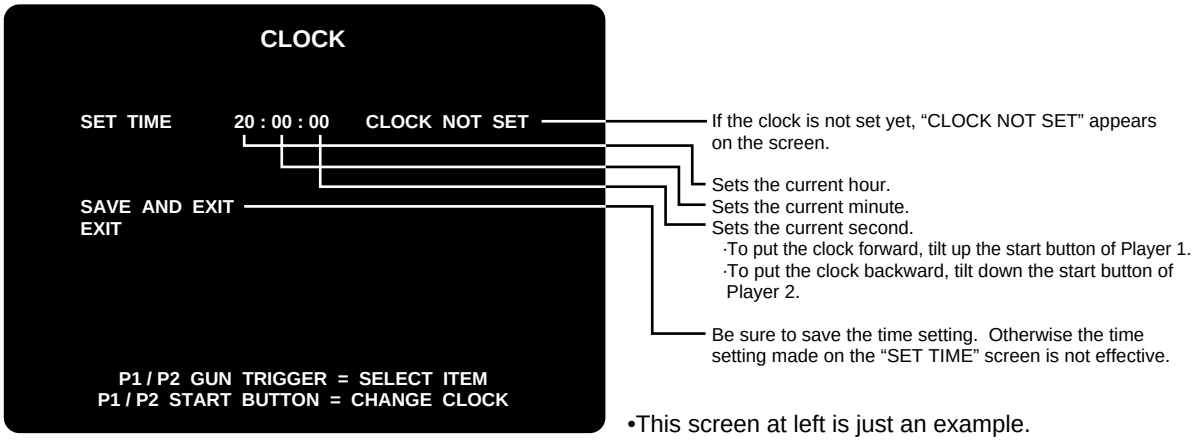

•This screen at left is just an example.

•If the clock is not set yet (just after this product has been installed or initialized, for example), the following message appears on the “BOOKKEEPING” menu screen to prompt you to set the clock.

FIRST, SET THE CLOCK.
“CLOCK” ITEM IS IN MAIN MENU.
P1 START BUTTON = OK

MEMO

ALL FACTORY SETTINGS

Returning all the settings to factory ones

■Mode for returning the test mode settings to their factory ones.
The items are shown at the left screen. (Nothing appears at the right.)
Pull the gun trigger of Player 1 or Player 2 to select the desired item and press the start button of Player 1.
When “YES” is selected, you are requested to confirm it. When “YES” is selected again, all the settings of test-mode will be returned to the factory settings with “NOW SAVING” appearing on the screen. The main menu screen will then show up itself.

•The following modes return to the factory settings.
“SOUND OPTIONS” “GAME OPTIONS” “COIN OPTIONS”
•The following modes do not return to the factory settings.
“Operating frequency of gun” “Calibration of gun” “BOOKKEEPING” “RANKING DATA”

MEMO

If “NO” is selected, “NO MODIFY SETTING” is indicated. This means the modified settings are not saved.

5-4 Adjusting the monitor

The monitor has already been adjusted at the time of shipment, but it may be readjusted as desired. When adjusting the monitor, refer to “SCREEN CHECK” and “COLOR CHECK” on page 37.

•Adjust the monitor appropriately.

Monitor adjustment PCB

The monitor adjusting PCB are mounted on both sides. When adjusting the monitors, remove the screws shown in the figure and dismount them using care not to let the covers drop. Adjust the right monitor first and then the left one.

Adjust the right monitor

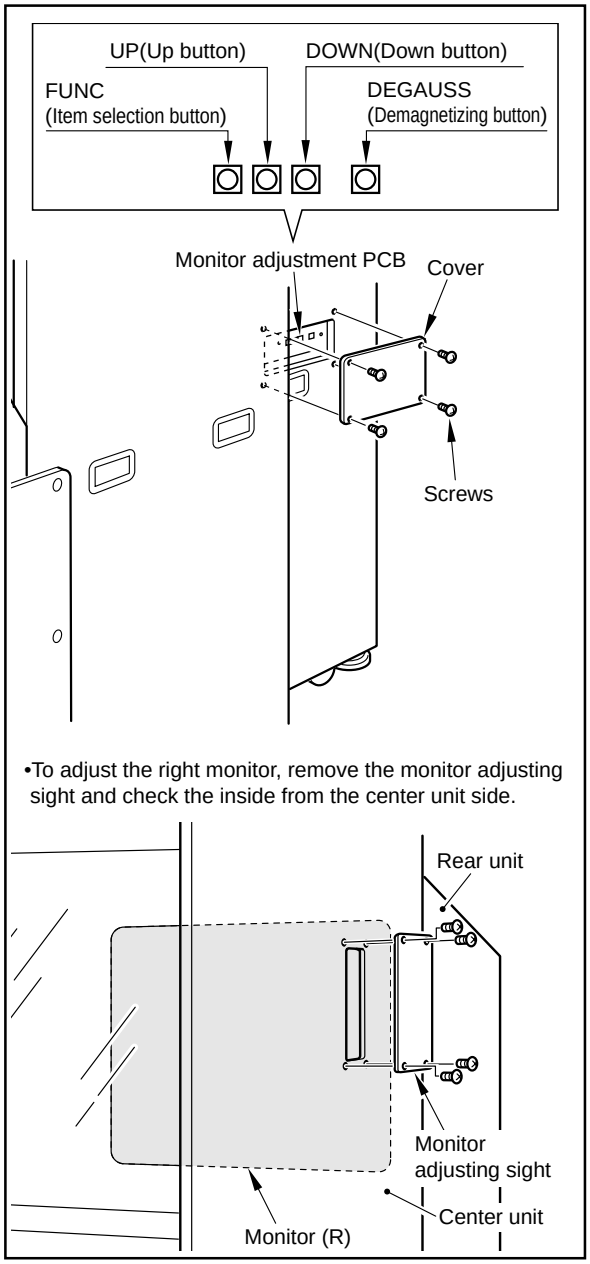

Adjust the left monitor

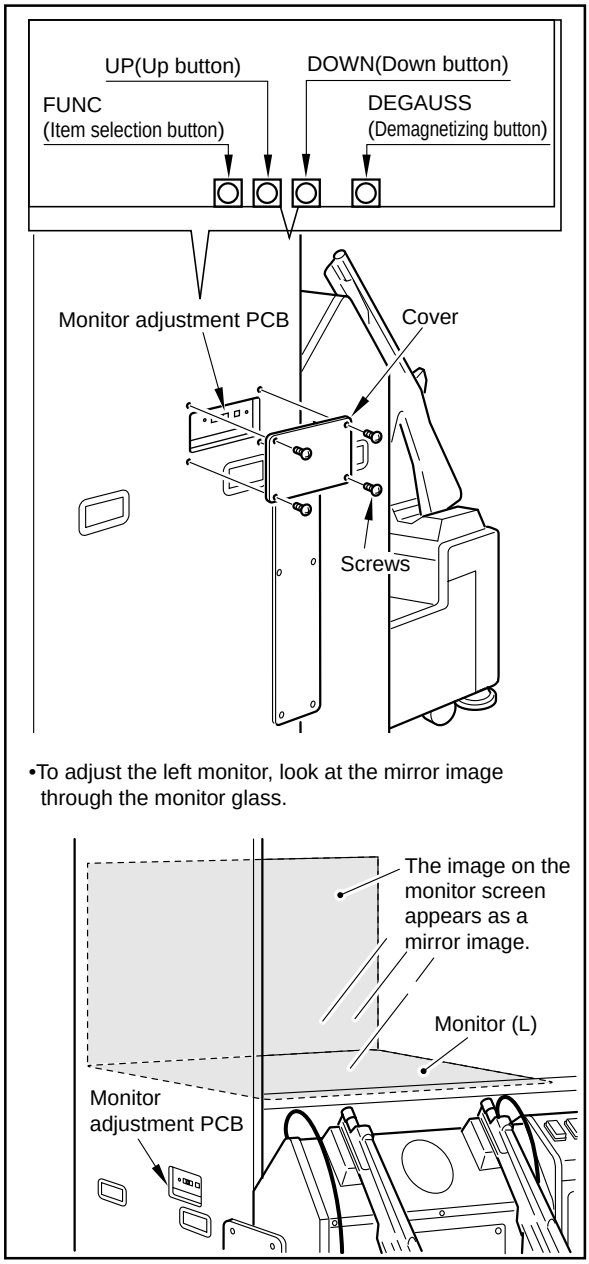

How to Adjusting the monitor

1 When the "FUNC" button is pressed, the menu as shown in the figure appears on the screen.

Menu display

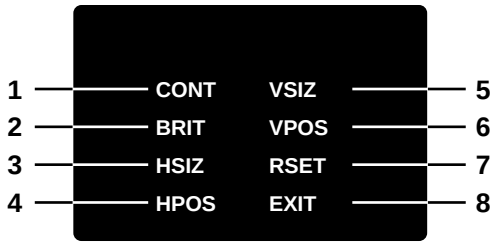

- The item which has been selected is shown in red, and the other items are shown in green.
- If there is no input for 6 seconds, the adjustment mode is cancelled and the menu display goes out.
- In adjusting the left monitor, the onscreen characters appear reversed. This is a mirror image, and there is no problem with the machine.

MEMO

Contents of Menu

1	**CONTRAST(CONT) : Picture contrast is adjusted.**
	• When the "UP" button is pressed, color contrast of the screen is intensified. • When the "DOWN" button is pressed, color contrast of the screen is weaken.
2	**BRIGHTNESS(BRIT) : Picture brightness is adjusted.**
	• When the "UP" button is pressed, brightness of the screen increases. • When the "DOWN" button is pressed, darkness of the screen increases.
3	**H.SIZE(HSIZ) : Horizontal size is adjusted. (Horizontal picture size is adjusted.)**
	• When the "UP" button is pressed, horizontal picture size is enlarged. • When the "DOWN" button is pressed, horizontal picture size is reduced.
4	**H.POSI(HPOS) : Horizontal position is adjusted. (Horizontal picture position is adjusted.)**
	• When the "UP" button is pressed, the picture moves to the right. • When the "DOWN" button is pressed, the picture moves to the left.
5	**V.SIZE(VSIZ) : Vertical size is adjusted. (Vertical picture size is adjusted.)**
	• When the "UP" button is pressed, vertical picture size is enlarged. • When the "DOWN" button is pressed, vertical picture size is reduced.
6	**V.POSI(VPOS) : Vertical position is adjusted. (Vertical picture position is adjusted.)**
	• When the "UP" button is pressed, the picture moves upwards. • When the "DOWN" button is pressed, the picture moves downwards.
7	**Reset(RSET) : All adjusted values are reset. (All adjusted values return to he factory settings.)**
	• When the "UP" and "DOWN" buttons are pressed simultaneously while "RSET" is displayed in red, "RSET" is displayed for 3 seconds and the data of the adjusting items return to their factory settings.
8	**EXIT : Adjustment mode is cancelled. (Adjustment mode is cleared and menu screen disappears.)**
	• When the "UP" or "DOWN" button is pressed while "EXIT" is displayed in red, the adjustment mode is cancelled.

2 Selection item changes in the following order each time the "FUNC" button is pressed.

→ CONT → BRIT → HSIZ → HPOS → VSIZ → VPOS → RSET → EXIT →

3 When the item to be adjusted is selected and the “UP” button or “DOWN” button is pressed once, the adjusting item is displayed.

4 Proceed to adjustment by pressing the “UP” or “DOWN” button again.

Adjustment mode screen

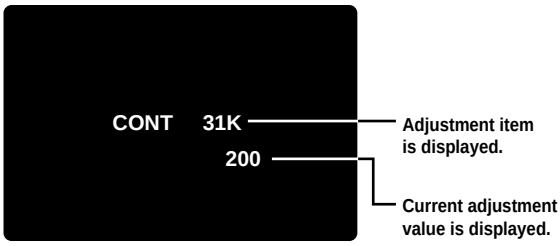

•This screen is just an example.

•If there is no input by the “UP” or “DOWN” button for 6 seconds, or when the “FUNC” button is pressed, the selected item is memorized in the currently adjusted value.

MEMO

■ “DEGAUSS” button

1 When the “DEGAUSS” button is pressed, degaussing is performed and “DEGAUSS” is displayed for about 5 seconds.

2 When the “DEGAUSS” button is pressed again after the completion of degaussing, the indication as shown at right is displayed and the waiting time until the subsequent degaussing becomes effective appears.

Degaussing wait screen

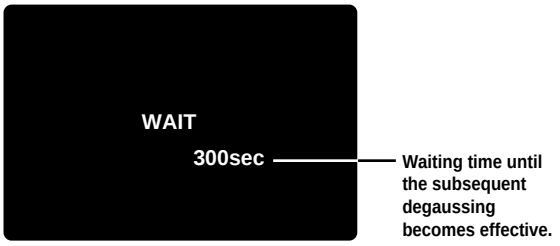

•This screen is just an example.

•If the “FUNC” button is pressed while the waiting time until the subsequent degaussing is displayed, the mode changes to adjustment mode.
•The waiting status continues even when the mode has been changed to adjustment mode. But degaussing starts automatically when the waiting time becomes “0”.

MEMO

6 Operation

6-1 Checking at the start of work

- **Be sure to turn OFF the main power switch and unplug the power cord from the receptacle before inspecting or cleaning the machine.**
- **Strictly refrain from disassembly and repair of parts which are not indicated in this manual, as well as settings and remodelling.**
- **To clean the game machine, wipe it with a soft cloth dampened in a neutral detergent and wrung out.**

■Checking at the start of work (More than once a day)

1 Be sure to turn OFF the main power switch and unplug the AC power cord from the receptacle.

2 Check the following points and proceed to maintenance if necessary. (See page 53.)

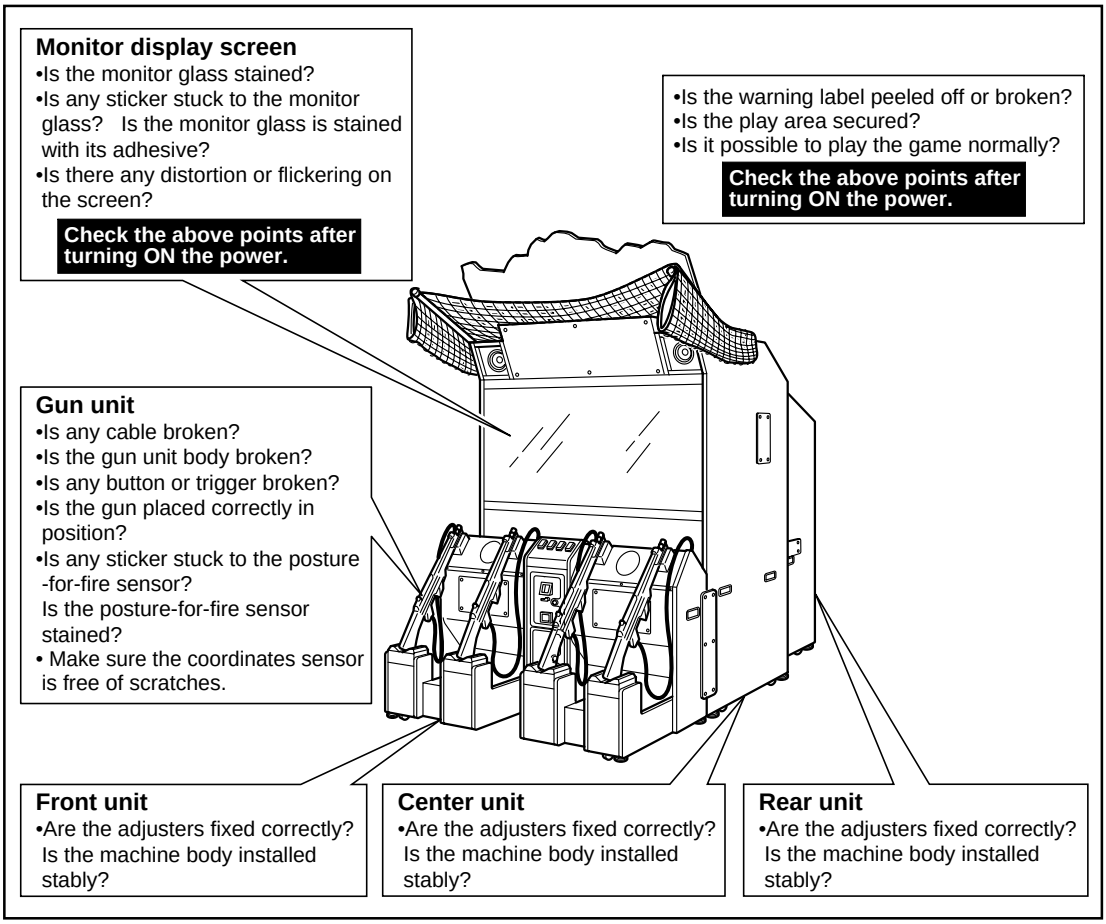

6-2 Periodic inspection

■Checking at the Periodic inspection (More than once a day)

1 Be sure to turn OFF the main power switch and unplug the AC power cord from the receptacle.

2 Check the following points and proceed to maintenance if necessary. (See page 53.)

•Is the power plug inserted in position?
•Is there dust buildup at the power plug?

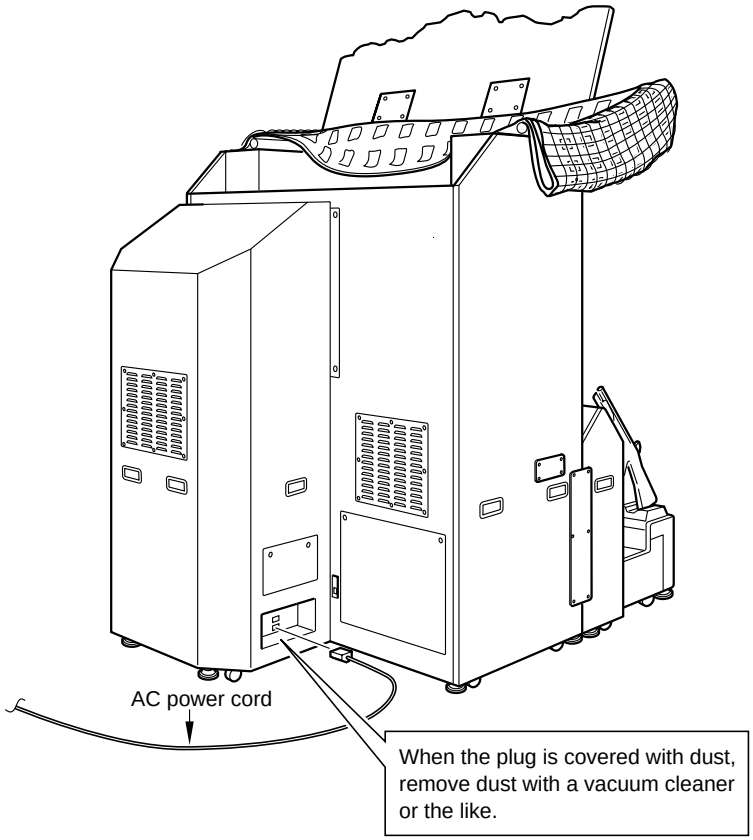

7 Daily Maintenance

How to Cleaning the machine body

- **Be sure to turn OFF the main power switch and unplug the power cord from the receptacle before inspecting or cleaning the machine.**
- **Strictly refrain from disassembly and repair of parts which are not indicated in this manual, as well as settings and remodelling.**
- **To clean the game machine, wipe it with a soft cloth dampened in a neutral detergent and wrung out.**
- **Do not use a high-pressure cleaning machine to clean up this product.**

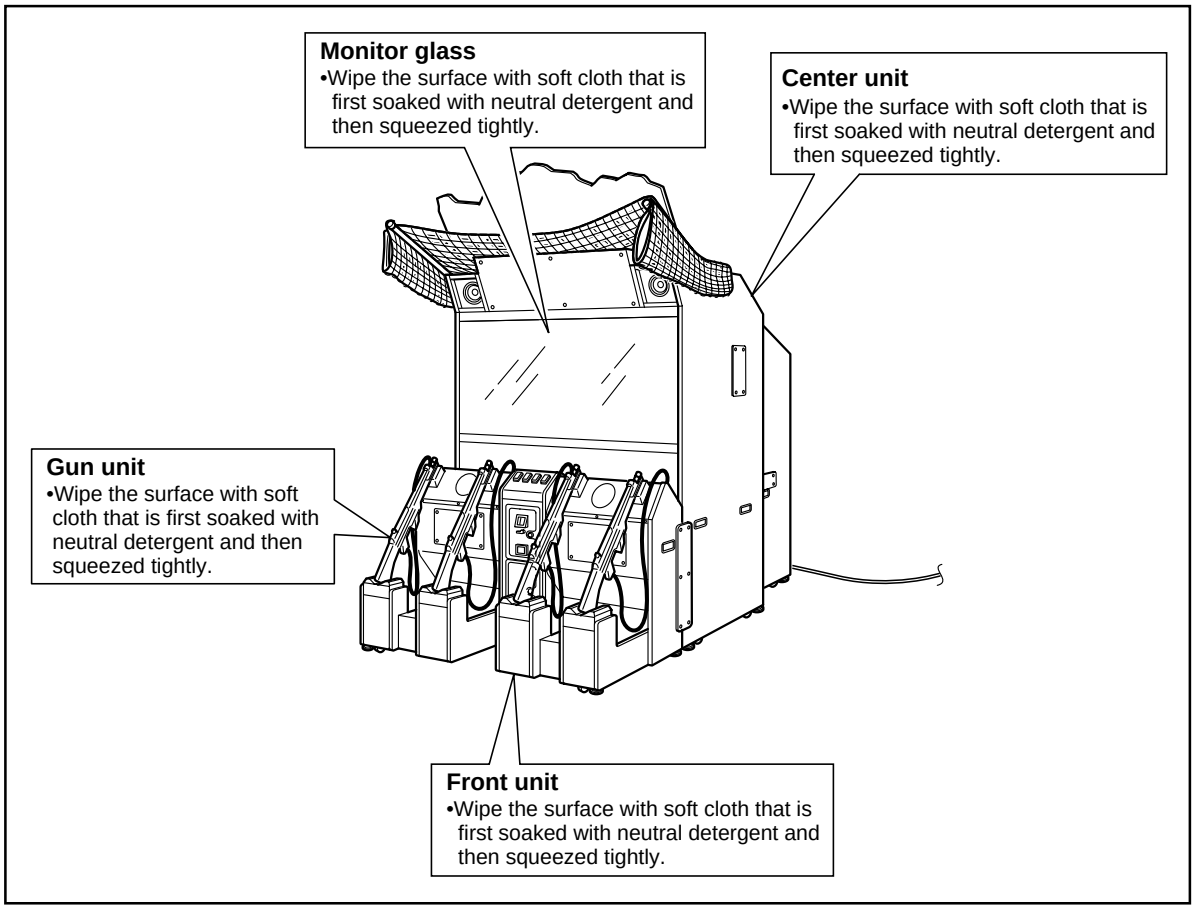

Cleaning the gun unit

Check to see if the gun unit's coordinates sensor and posture-for-fire sensor are not scratched or stained. If so, the sight may fail or the gun may malfunction.

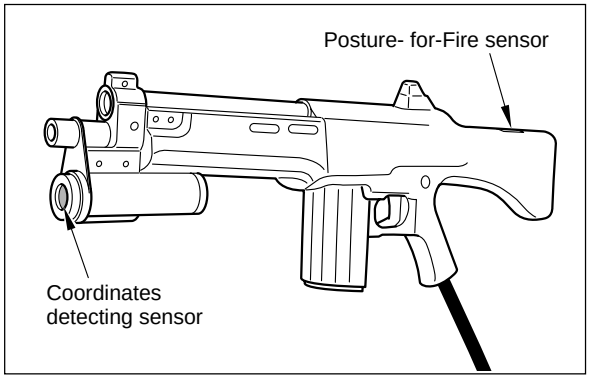

MEMO

The Chapters “Installation and Assembling” and “Maintenance” are written particularly for qualified in-shop maintenance persons or industry specialist. Please read through these chapters.

8 Installation and assembling

8-1 Installation environment

■Installation environment for this product

•Do not install this product in a place where the sensors and the gun unit coordinates detecting sensor or posture-for-fire-sensor are exposed to direct sunlight, fluorescent lamp light or spotlight, or near a place where exists something like a mirror or metal plate which reflects the light.

Do not install this product in such places as follows.

Do not install this product in a place where the sensors and the gun unit coordinates detecting sensor or posture-for-fire-sensor are exposed to strong light.
•Avoid a place exposed to direct or indirect strong light.

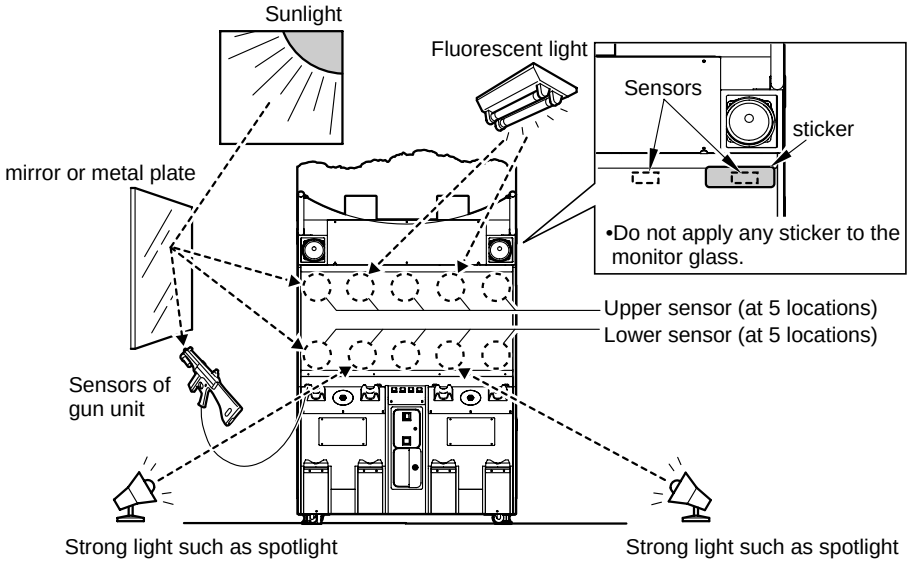

•Place exposed to direct and strong light

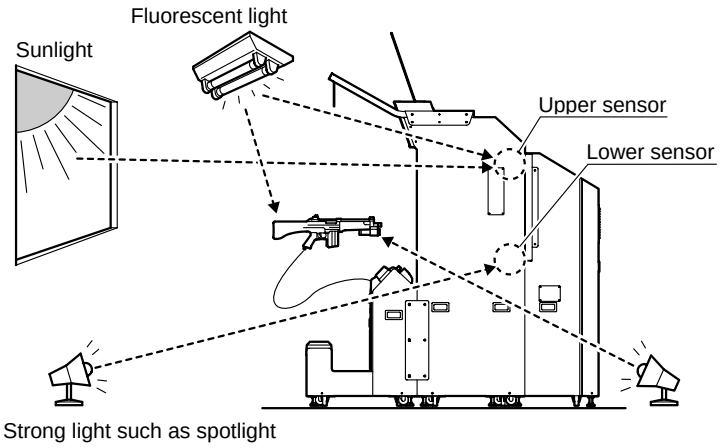

8-2 Installation procedure

■Outline of installation and assembling

•When connecting the units, use due care not to allow your hands and the wires to be pinched.
•The center unit and rear unit may turn over depending on the pushing direction. When moving the center unit, push it in parallel with the monitor glass, and when moving the rear unit, push it in parallel with the monitor display screen. When moving them on a slope or running over a bump, more than 4 persons should carry them by holding the grips.

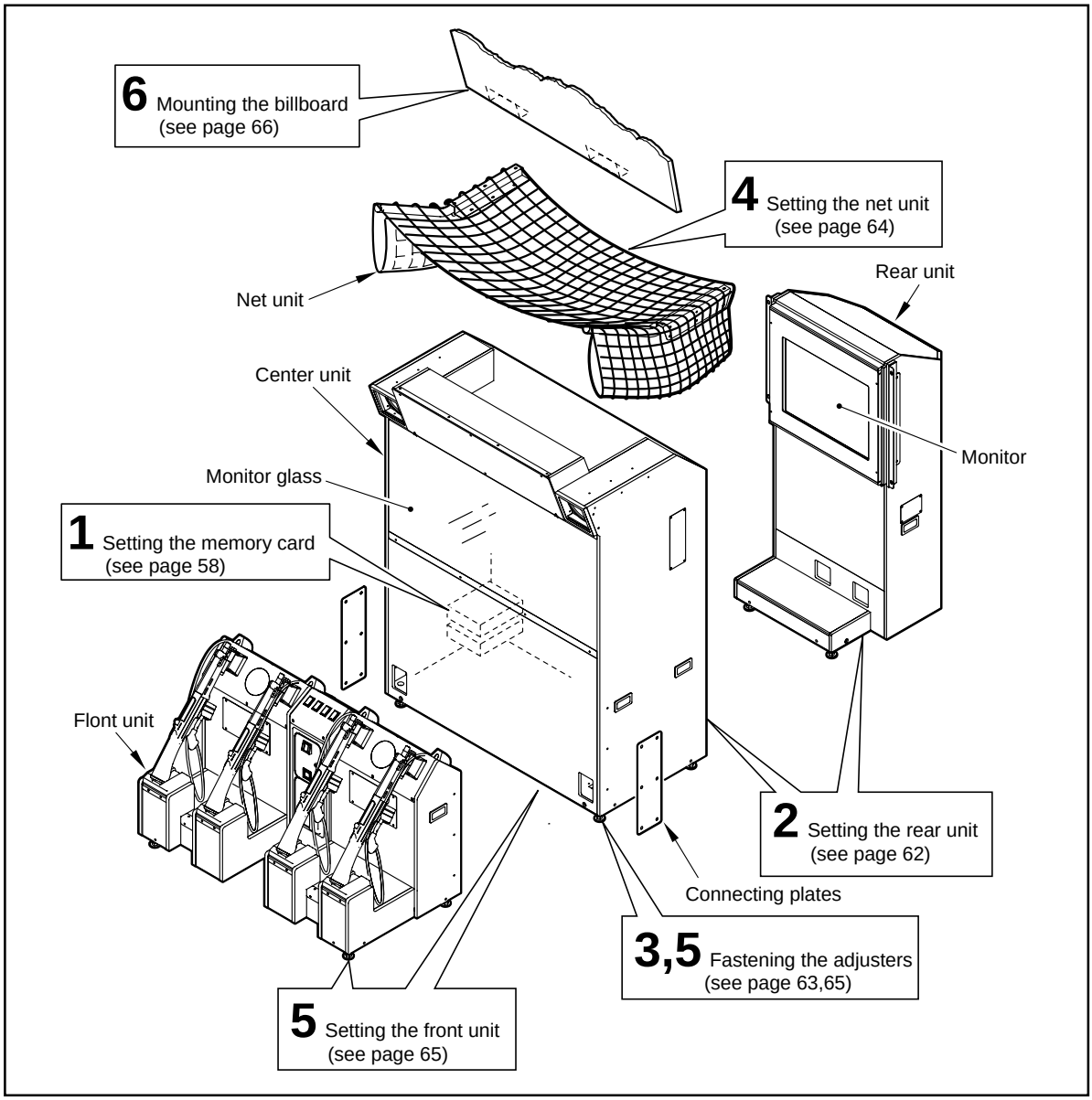

8-3 Setting the memory card

How to set up the memory card

- **Set the memory cards to PCB unit 1 and PCB unit 2. Do not set them at a time, but be sure to set them one by one.**
- **Before setting the memory card, be sure to turn OFF the main power switch and unplug the power cord from the receptacle.**
- **There is high voltage inside the machine. Only the qualified industry specialist is allowed to open the back door. With the back door open, be very careful not to touch the monitor and its nearby parts.**
- **In the event that the main power switch has not been turned OFF but only the sub power switch has been turned OFF, there are still some live parts in the machine. When opening the back door, be sure to turn OFF the main power switch and unplug the power cord from the receptacle.**

1 Make sure that the main power switch is turned OFF and the power cord is unplugged.

2 Remove the screws shown in the figure from the center unit, and dismount the back door by slightly heaving it up.

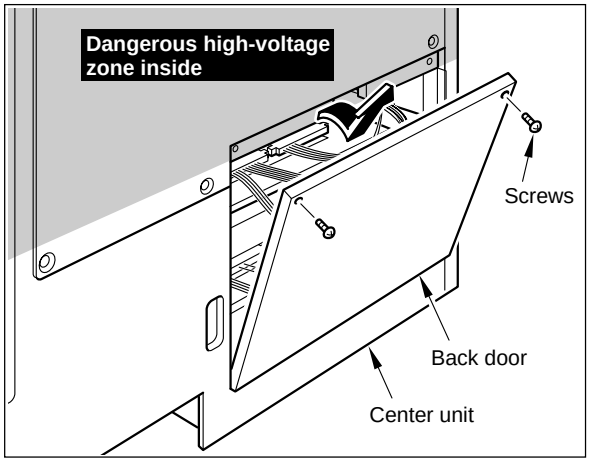

- **Never touch the high-voltage area shown in the figure.**

3 Wear a grounding band to prevent static electricity.
Be sure to keep on the grounding band for the later procedures too.
(The grounding band does not come with the kit.)

- Static electricity may damage the electronic parts in the PCB unit.

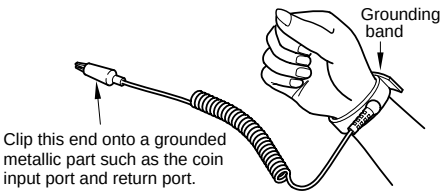

MEMO

4 **Setting the memory card to the PCB unit 1**
Remove the wires from the upper clamp and disconnect the connectors and the jack pin as shown in the figure from the PCB unit 1.

5 Remove the two thumbscrews and dismount the PCB unit 1 together with the wooden board.

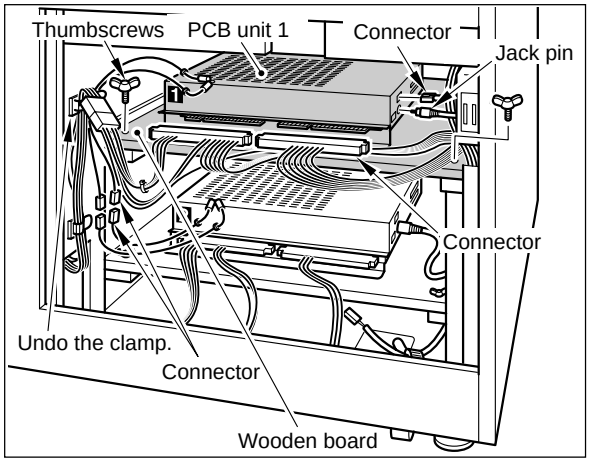

6 Insert the memory card (C22 *02) for this product in the upper slot (SLOT 2) of the PCB unit, paying attention to the inserting direction.

- There are two slots (upper slot and lower slot) for PCB unit 1 memory card, but be sure to insert the card in the upper slot so deep that its printed face should be visible.
- Be sure to insert the memory card of PCB unit 1 in the slot.
- Two memory cards come with the product and they may be used for either of the PCB unit 1 or PCB unit 2.

MEMO

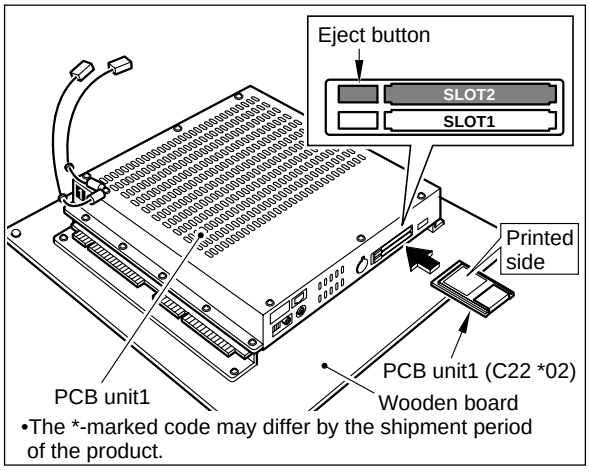

7 Make sure all the DIP switches on the PCB unit 1 are at the OFF position.

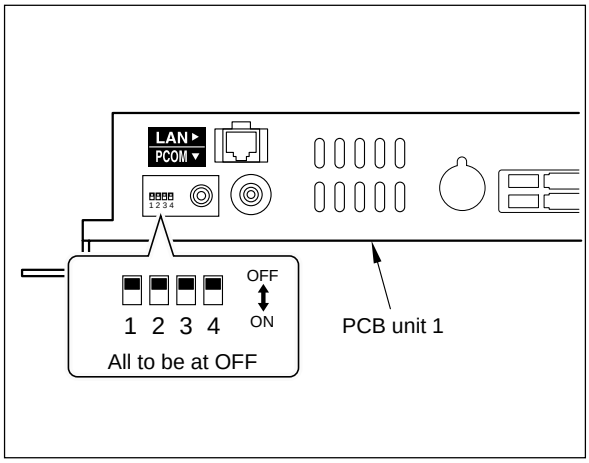

8 Set the PCB unit 1 back into position with care not to get the wires caught. Reconnect all the connectors and jack pins (disconnected in Step **4** above).

9 Fix the wooden board with the thumbscrews.

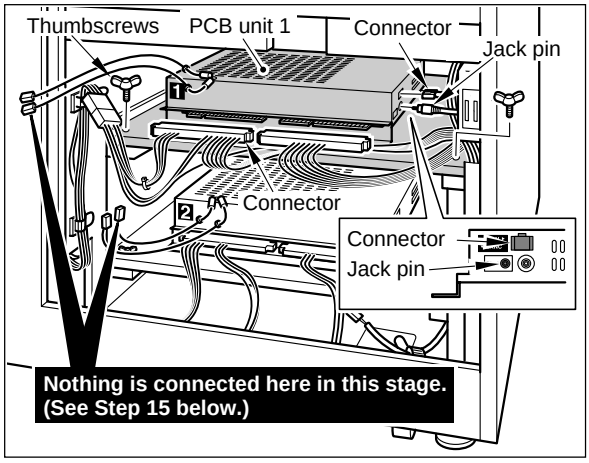

10 **Setting the memory card to the PCB unit 2**
Next, pull off the connectors and jack pin of the PCB unit 2, which are shown in the figure.

11 Remove the two thumbscrews and dismount the PCB unit 2 together with the wooden board.

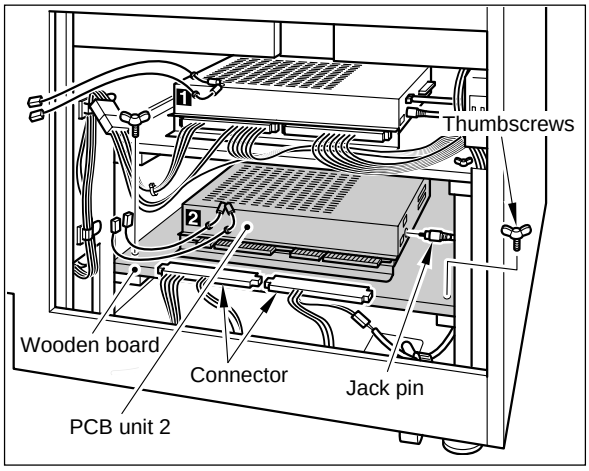

12 Insert the memory card (C22 *02) for this product in the upper slot (SLOT 2) of the PCB unit, paying attention to the inserting direction.

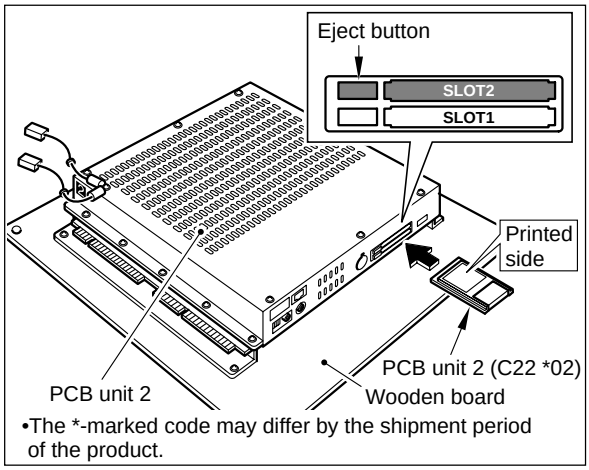

MEMO

- There are two slots (upper slot and lower slot) for PCB unit 2 memory card, but be sure to insert the card in the upper slot so deep that its printed face should be visible.
- Be sure to insert the memory card of PCB unit 2 in the slot.
- Two memory cards come with the product and they may be used for either of the PCB unit 1 or PCB unit 2.

13 Make sure that the DIP switches 1, 3 and 4 of the PCB unit 2 are at “OFF”, and the DIP switch 2 is at “ON”.

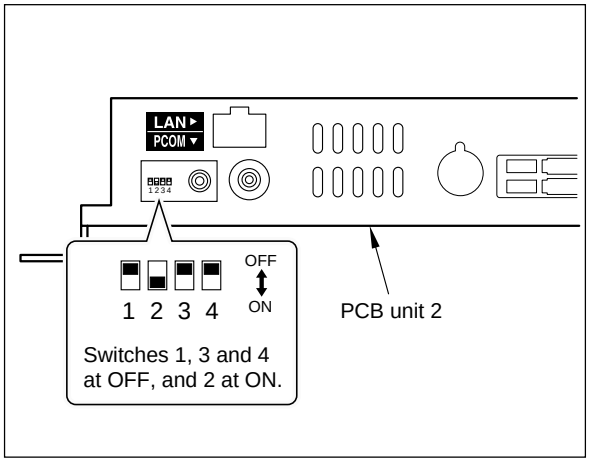

14 Set the PCB unit 2 back into position with care not to get the wires caught. Reconnect all the connectors and jack pins (disconnected in Step **10** above).

15 Then, reconnect the two connectors shown in the figure that were disconnected in Step **4**, tie up the wires with the clamp and then fix the wooden board with the thumbscrews.

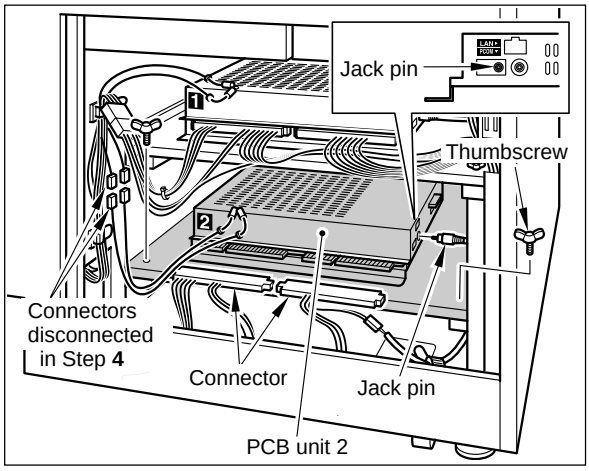

16 Mount the back door and fix it firmly with the thumbscrews. (If the thumbscrews are not tightened enough, the door switch gets activated to keep off the power.)

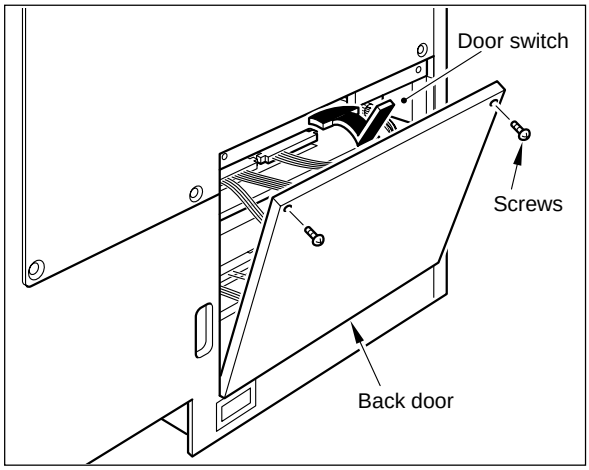

Continued on next page.

8-4 Setting the rear unit

■How to mount the rear unit

•When connecting the units, use due care not to allow your hands and the wires to be pinched.

1 Connect the connectors of the front unit and the center unit.

•Put the connected connectors in the center unit.

MEMO

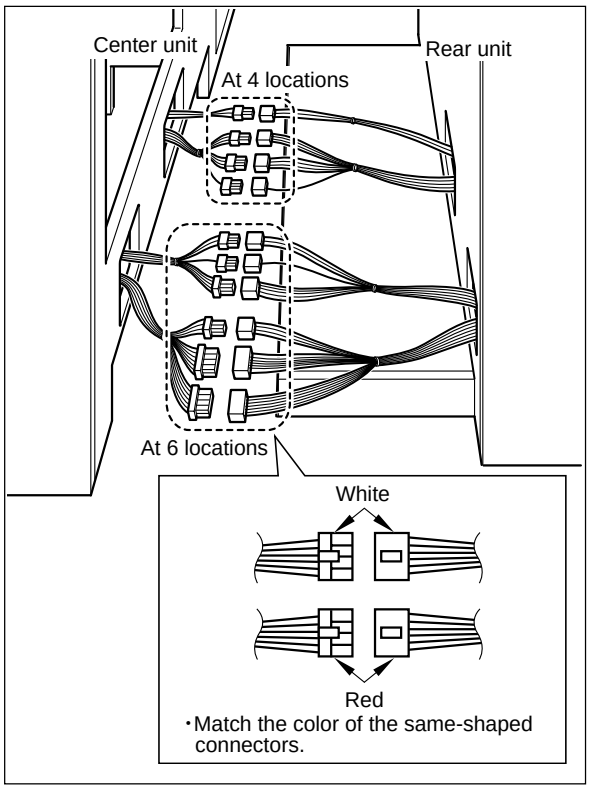

2 Interconnect the center unit and rear unit using the accompanying bolts with care not to get the wires caught.

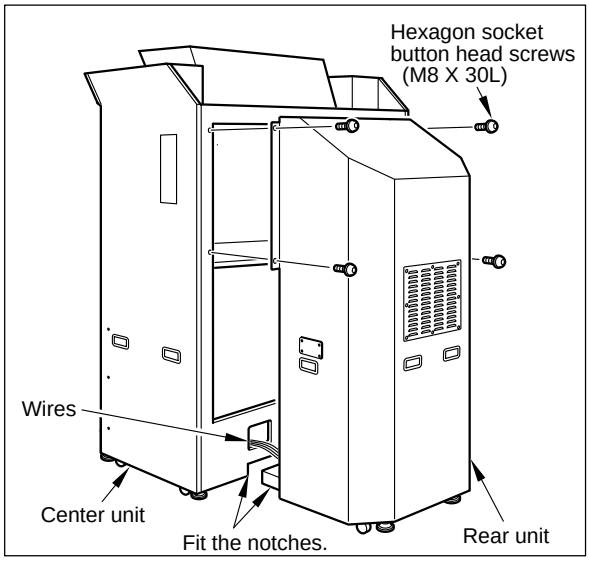

Continued on next page.

8-5 Fastening the adjusters

■How to fasten the cabinet adjusters

•Do not tighten up one adjuster at a time, but tighten up the adjusters evenly.
•Adjust the adjusters so that the casters do not touch the floor.
Take care not to exceed the maximum adjusting height of the adjuster.
•With the units connected, make sure that the ten adjusters are all in contact with the floor and the units is stable and well leveled. Then tighten the hexagon nuts upward.

•Secure the front unit's adjusters after taking the procedure in “8-7 Setting the front unit” on page 65.

MEMO

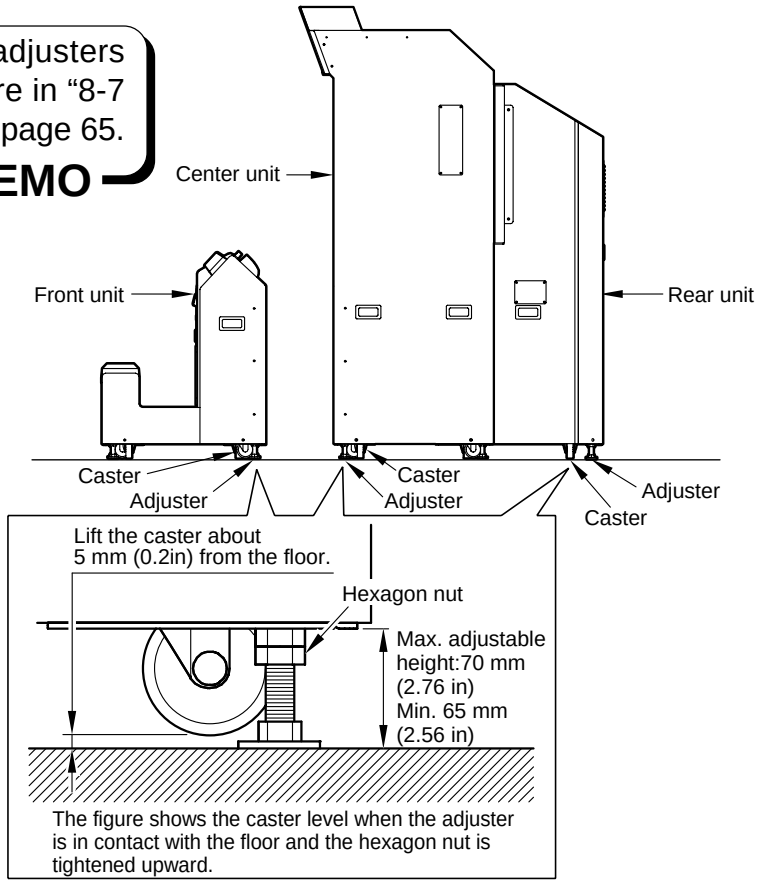

1 Bring the adjuster in contact with the floor by means of a wrench of 24 mm width across flats

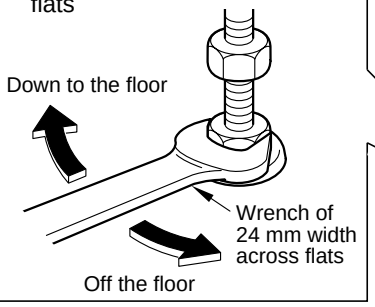

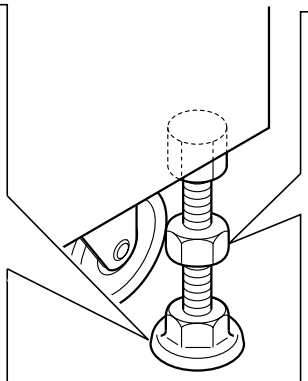

2 Make sure that the caster is approx. 5 mm above the floor, and then tighten the hexagon nut upward.

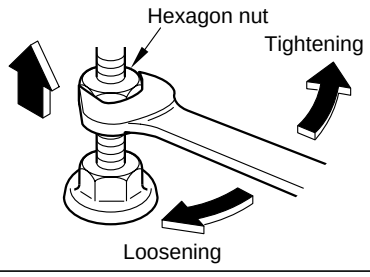

Continued on next page.

8-6 Setting the net unit

How to mount the net unit

- **Before attaching and detaching the net unit, fix the adjusters of the center unit and rear unit. (See page 63)**
- **The net unit weighs about 8 kg (17 lb). Be sure to cover and uncover the machine by more than 3 persons with use of stepladders or the like for your safety.**
- **When mounting the net unit, be careful not to pinch your hands and the wires.**

Place the net unit on the center unit and fix it with the accompanying screws.

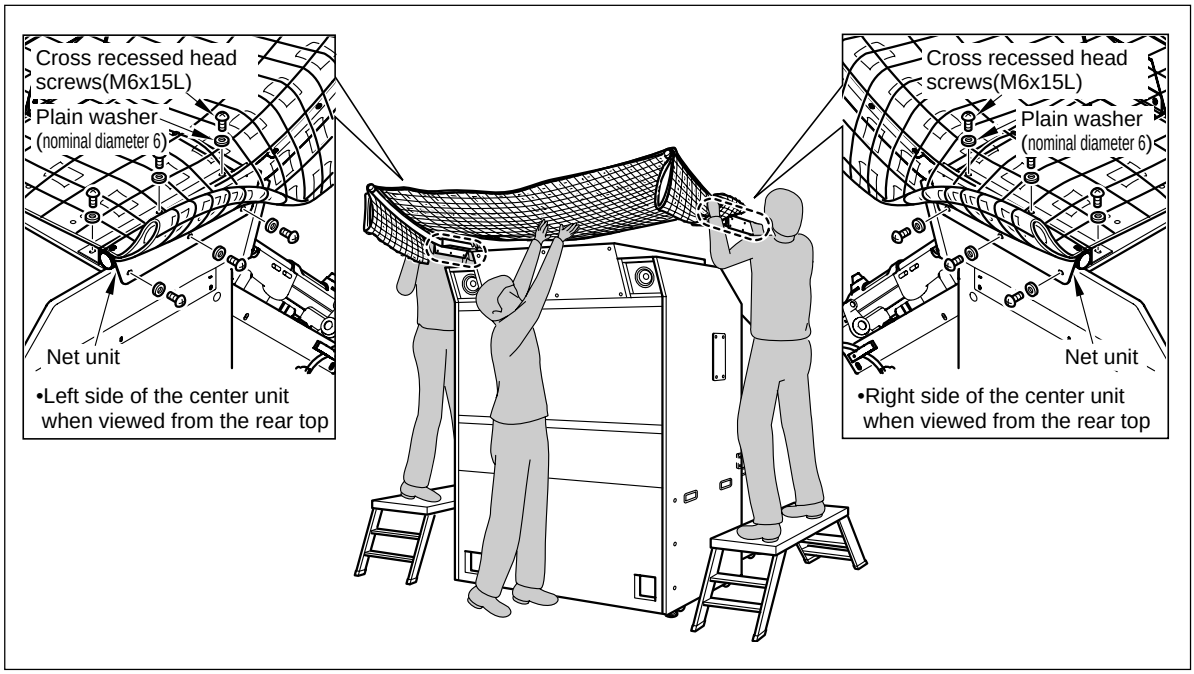

Continued on next page.

8-7 Setting the front unit

■How to mount the front unit

•When attaching the units, be very careful not to get your hands and wires caught.
•When attaching the units, be sure to make a team of two or more people, using a stepladder for added safety.

1 Connect the connectors of the front unit and the center unit.

•Put the slack of the wires into the front unit.

MEMO

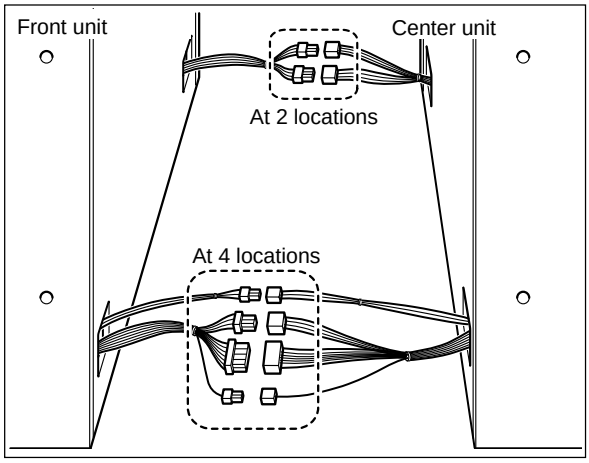

2 Align the front unit and the center unit, paying attention not to pinch the wires.

3 Referring to “8-5 Fastening the adjusters” on page 63, adjust the height of the front unit. Finally fix the units with the coupling plates and the accompanying screws.

•The figure shows the right side of the machine. Do the same for the left side.

MEMO

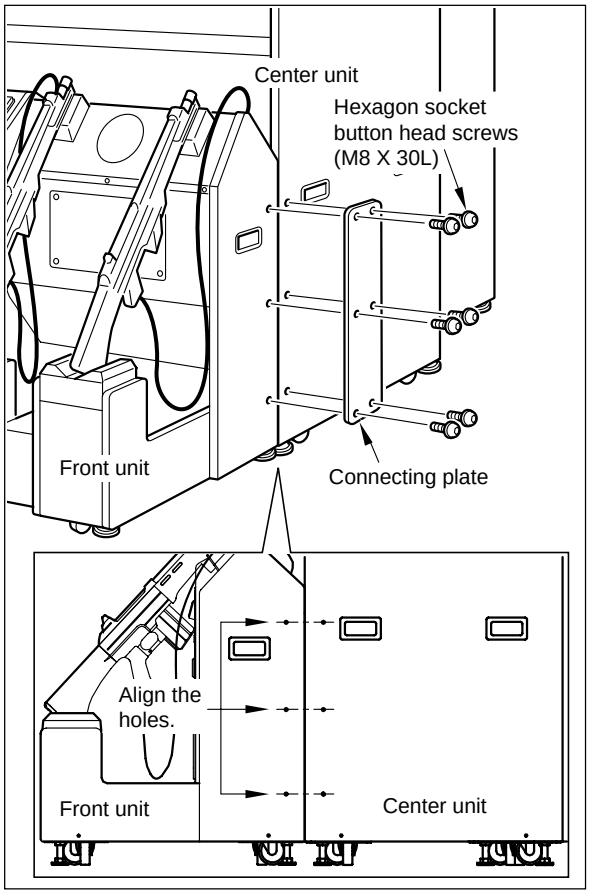

Continued on next page.

8-8 Mounting the billboard

How to mount the billboard

•Cover and uncover the units with the billboard after the adjusters are fixed. (See page 53)
•When handling the billboard, be sure to make a team of two or more people, using a stepladder for added safety.
•When moving this product, be sure to dismount the billboard, separate the units, raise the adjusters up to full extent and roll it on the casters.
•Before attaching and detaching the billboard, fix the adjusters of the machine.
•When attaching the billboard, be sure to make a team of two or more people, using a stepladder for added safety.

1 Assemble the billboard as shown in the figure.

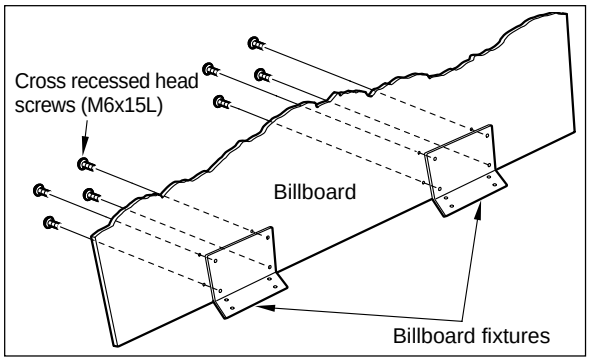

2 Set the billboard after placing the net in the position of the center unit top shown in the figure, and fix it with the accompanying screws.

•If the screw holes are hidden by the net, reposition the net unit.

MEMO

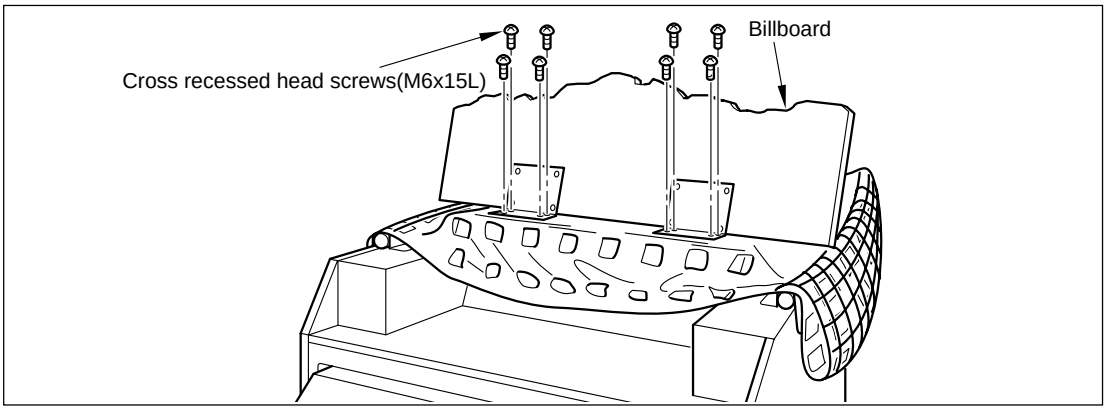

3 **Now the entire machine is completely installed.**
Plug in the power cord and turn ON the power switch to get the machine started. (See page 25.)

4 Then press the test button on the service panel to go to the test mode. Adjust the screen size and horizontal position on the “SCREEN CHECK” screen. The adjusters”, and fix the units with the connecting plate and accompanying screws. (See page 27,37.)

8-9 Splitting into and moving of units

Before moving the machine, be sure to remove the units.

How to split into units

•Before separating the units or moving the machine, be sure to turn OFF the main power switch, unplug the power cord, and disconnect the power cord.
•When moving the units, use care not to apply a strong force to them.
•When moving the units, raise the 4 adjusters each for the units to full extent and roll them on the casters.
•The center unit and rear unit may turn over depending on the pushing direction. When moving the center unit, push it in parallel with the monitor glass, and when moving the rear unit, push it in parallel with the monitor display screen. When moving them on a slope or running over a bump, more than 4 persons should carry them by holding the grips.
•When connecting the split units again, pay due attention not to pinch your hand and wires.

Take the following steps, shown below, to separate the units.

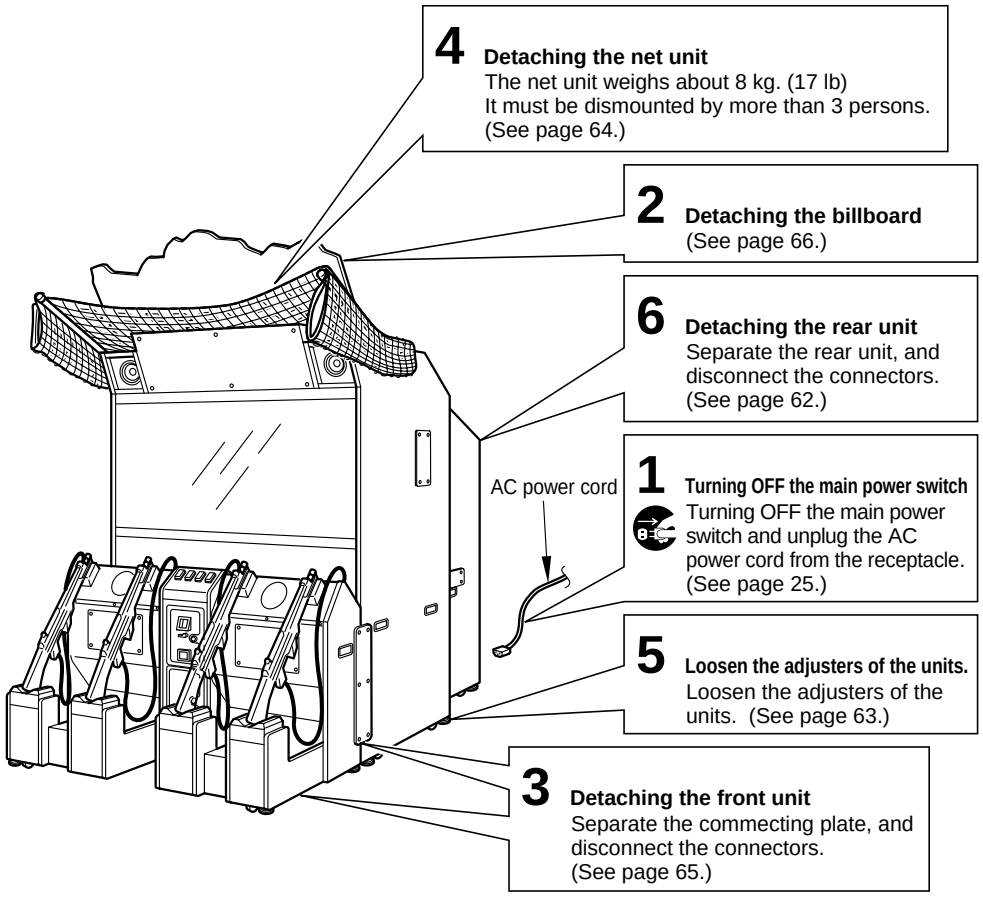

•Be careful not to separate the units too wide. Otherwise the wires may get disconnected and their internal wires may be broken.

MEMO

8-10 Moving the coin counter

The coin counter was installed in the coin box when the machine left the factory, but it can be moved onto the service panel.

How to move the coin counter

•Before moving the coin counter, be sure to turn OFF the main power switch and unplug the power cord from the receptacle.

1 Be sure to turn OFF the main power switch and unplug the AC power cord from the receptacle.

2 Open the coin door and take out the coin box. Remove the screws and take out the coin counter.
In the meanwhile, disconnect the connectors.

3 Remove the maintenance door and unscrew the blind cover to remove it from the service panel.

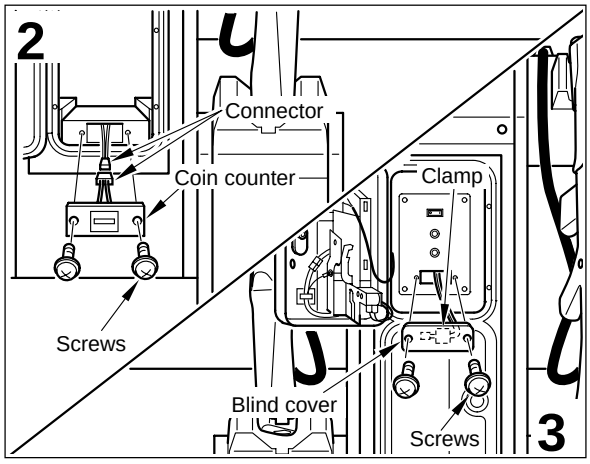

•The wires for relocation are fixed with the clamp behind the blind cover.
•Be careful not to remove the blind cover too widely, or the wires may get disconnected or the internal wires may get broken.

MEMO

4 Draw the connector from behind the blind cover and connect it to the coin counter.

5 Attach the coin counter on the service panel with the screws.

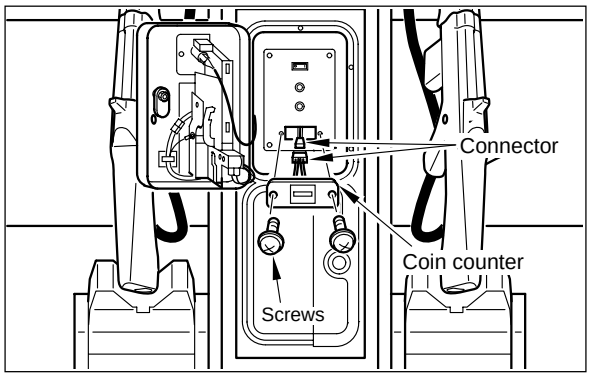

6 Attach the blind cover (detached in Step **3** above) back in position on the coin counter using the screws. At this time, fix the connectors, which were disconnected in Step **2**, behind the blind cover with the clamp.

7 Place the coin box back into position and close the coin door.

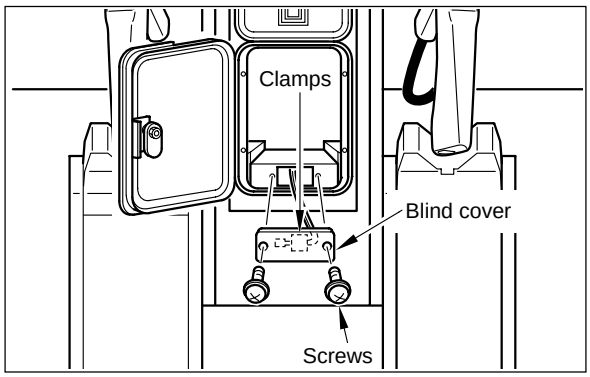

9 Maintenance

9-1 Replacing the coin selector

How to replace the coin selector

- **Before replacing the coin selector, be sure to turn OFF the main power switch and unplug the power cord from the receptacle.**
- **Take care not to apply any load or impact to the maintenance door when it is open.**
- **After closing the maintenance door, be sure to check that the door is locked securely.**
- **When replacing parts, be sure to use parts of the correct specifications. Never use parts other than the specified ones.**
- **Strictly refrain from disassembly and repair of parts which are not indicated in this manual, as well as settings and remodelling.**

1 Be sure to turn OFF the main power switch and unplug the AC power cord from the receptacle.

2 Open the maintenance door.

3 Release the levers that fix the coin selector. See at right.

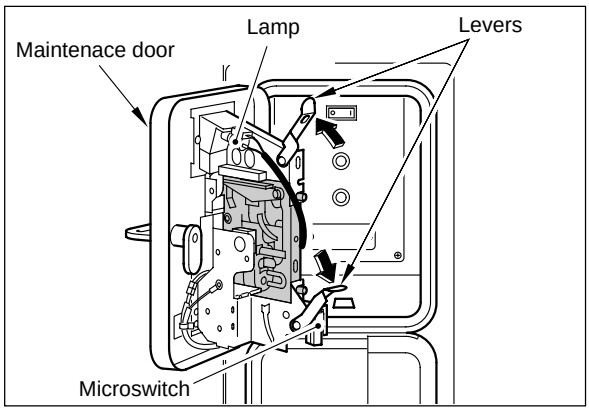

4 Slide the coin selector to the right, and take it out.

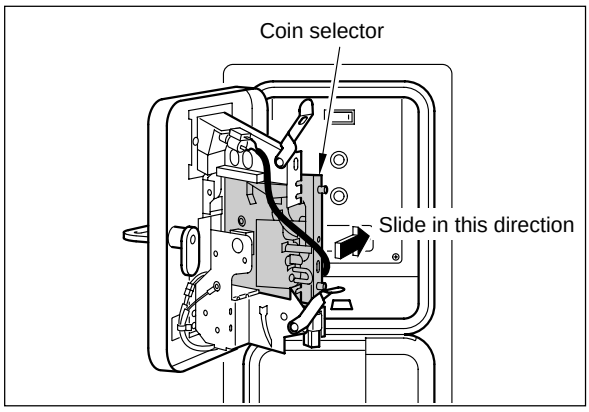

5 **To fit a new coin selector**
Fit the 2 projections of the coin selector to their mating notches.

6 Lock the levers (in Step **3** above) again, and close the maintenance door.

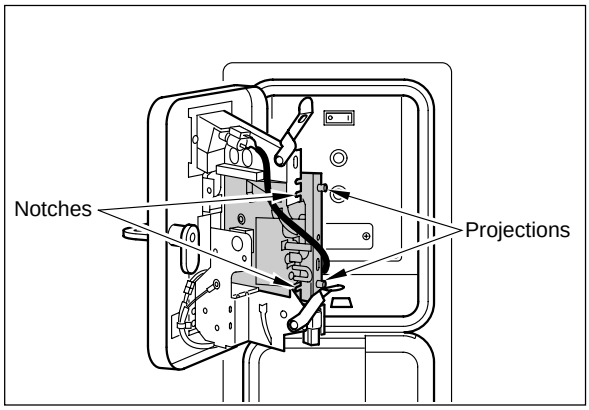

9-2 Replacing the fluorescent light

How to replace the fluorescent light

•Before replacing the fluorescent light, be sure to turn OFF the main power switch and unplug the power cord from the receptacle.
•The fluorescent light is hot just after the power switch is turned off. Wait until it cools down and then replace it with a new one of the same type.
•When replacing the fluorescent lamp, be sure to carry out the work by more than 2 persons with use of stepladders for your safety.
•When replacing parts, be sure to use parts of the correct specifications. Never use parts other than the specified ones.
•Strictly refrain from disassembly and repair of parts which are not indicated in this manual, as well as settings and remodelling.

1 Be sure to turn OFF the main power switch and unplug the AC power cord from the receptacle.

2 Remove the screws, and dismount the title panel by pushing it up as shown in the figure.

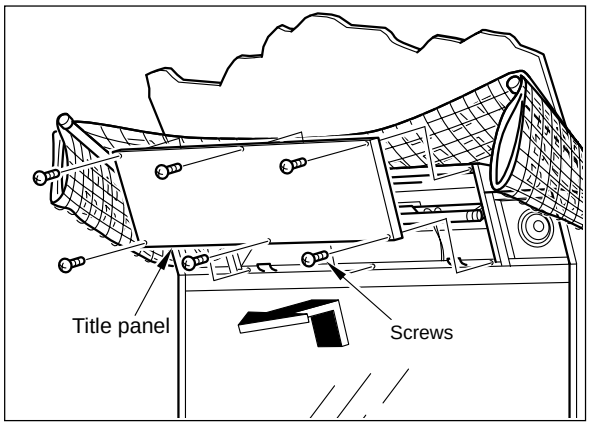

3 Push one end of the fluorescent light in the direction of the socket. The other end of the fluorescent light will be datached from the opposite socket.

4 Install a new fluorescent light in the reverse order.

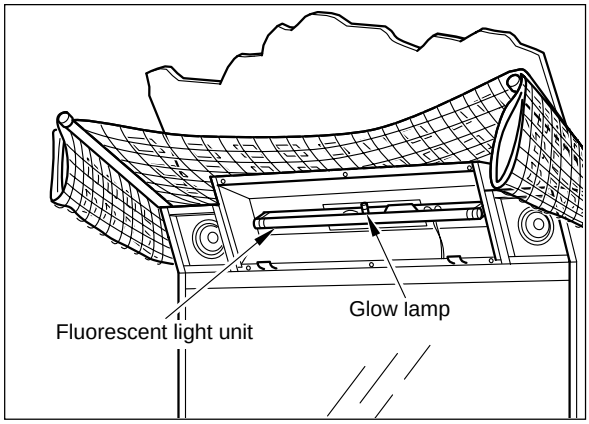

•It is recommended that the glow lamp should be also replaced.

MEMO

5 Mount the title panel to the original position.

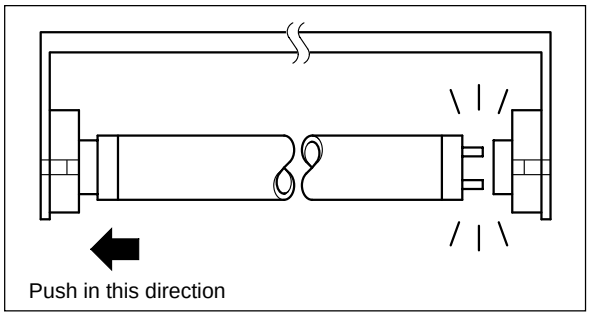

9-3 Replacing the start button

- **Before replacing the start button, be sure to turn OFF the main power switch and unplug the power cord from the receptacle.**
- **When replacing parts, be sure to use parts of the correct specifications. Never use parts other than the specified ones.**
- **Strictly refrain from disassembly and repair of parts which are not indicated in this manual, as well as settings and remodelling.**

How to replace the start button

The figure illustrates how to replace the start button of Player 1. Do the same for the other start buttons.

1 Be sure to turn OFF the main power switch and unplug the AC power cord from the receptacle.

2 Remove the screws shown in the figure and detach the cover.

3 Remove the screws shown in the figure, dismount the panel and pull off the connectors.

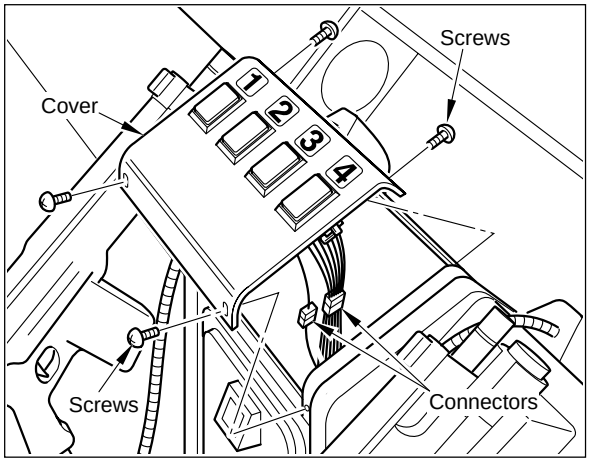

- Be careful not to open the panel too widely, the wires may get disconnected or the internal wires may get broken.

MEMO

4 Remove the screws and remove the bands which fix the microswitches.

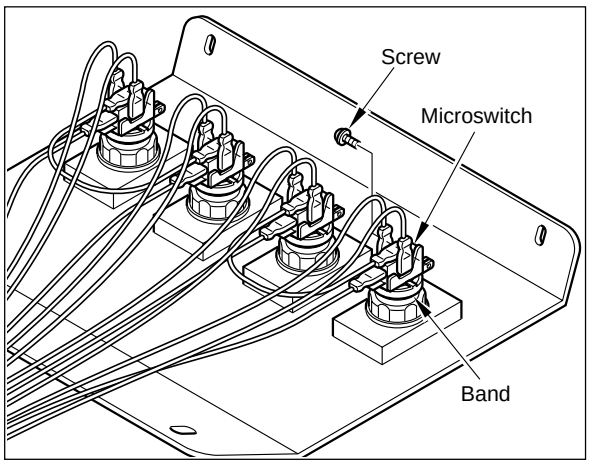

5 Pull off the socket from the start button.

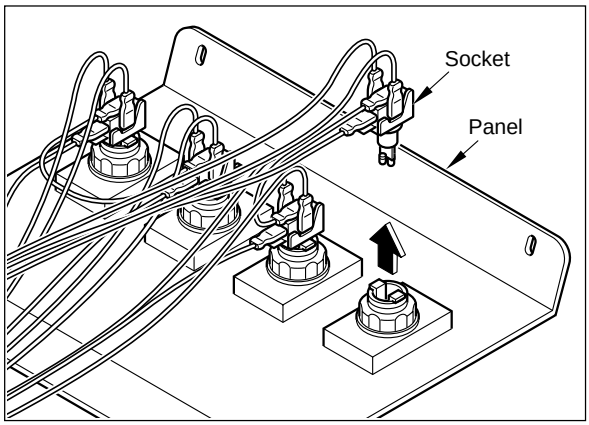

6 Loosen the nut and remove the start button.

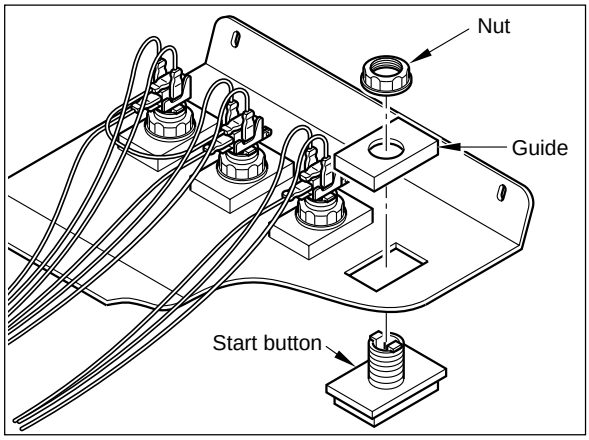

7 **Mounting the start buttons.**
Mount the start buttons in the reverse order, paying attention to their direction.

8 When reassembling the start buttons, mount them in the reverse order, paying attention not to confuse the wires.

•When the start buttons and the microswitches are replaced, reconnect the wires correctly, referring to page 73.

MEMO

•Socket layout when viewed from behind the panel

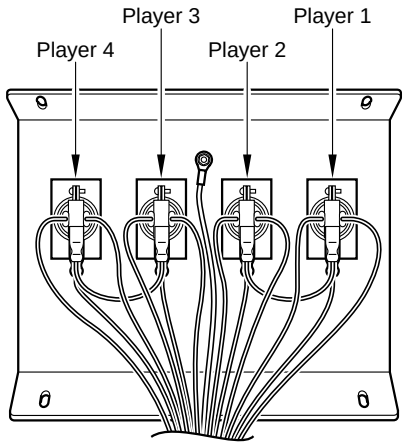

9 Mount the panel in the reverse order.

10 Plug in the power cord and turn ON the power to start the machine. (See page 25.)

11 Then, operate the machine in test mode, and carry out “INPUT CHECK” and “LAMP CHECK” on the “I/O CHECK” screen (see page 33.) and check to see if the start buttons work normally.

■After replacement of the start buttons and microswitches

When the start button and microswitches have been replaced, reconnect the wires as shown below.

Start button

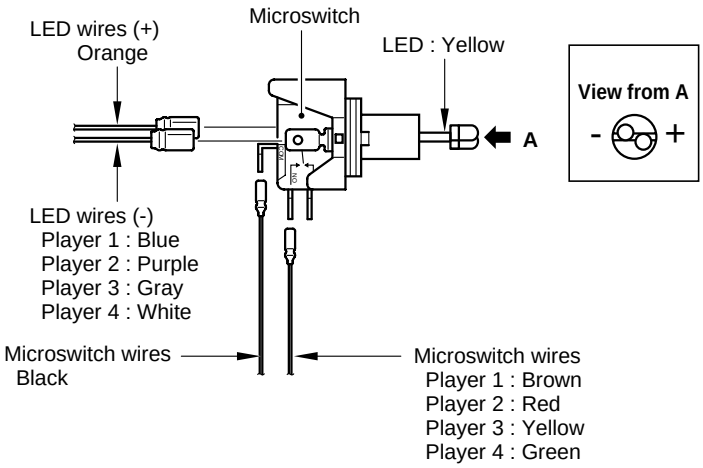

- The LED terminals are marked (+) and (-). Be sure to connect the orange wires to the (+) terminal, and the wires of the player-corresponding color to the (-) terminal.
- The button is for LED only. Do not use it for any other purpose.
- The LED can not be replaced separately.

Microswitch

- Mount the microswitch as shown in the figure.

1. Fit it to Pin 1.
2. Tilt up the microswitch 90 degrees and fix it by pin 2.

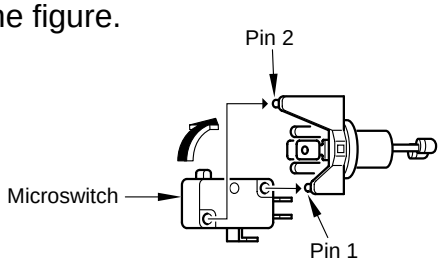

9-4 Replacing the gun unit

Check the gun unit of this product at least once a day, and replace it if damaged.

How to replacing the gun unit

- **Check the gun unit at least once a day. Never use it if it is broken, cracked or the cable is in poor contact.**
- **Before replacing the gun unit, be sure to turn OFF the main power switch and unplug the power cord from the receptacle.**
- **When replacing parts, be sure to use parts of the correct specifications. Never use parts other than the specified ones.**
- **Strictly refrain from disassembly and repair of parts which are not indicated in this manual, as well as settings and remodelling.**

The figure illustrates how to replace the gun unit of Player 4. Do the same for the other gun units.

1 Be sure to turn OFF the main power switch and unplug the AC power cord from the receptacle.

2 Separate the front unit and the center unit, referring to “8-7 Setting the front unit” on page 65.

3 Remove the screws shown in the figure and detach the cover.

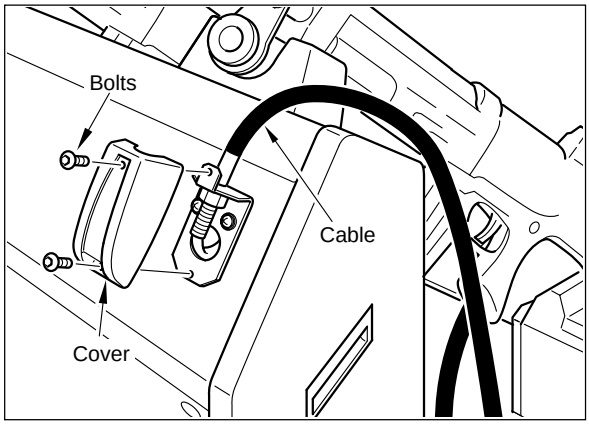

- Use an Allen wrench (2.5 mm) for removing the bolts.

MEMO

4 Remove the screws shown in the figure, detach the bracket, disconnect the connector and dismount the gun unit.

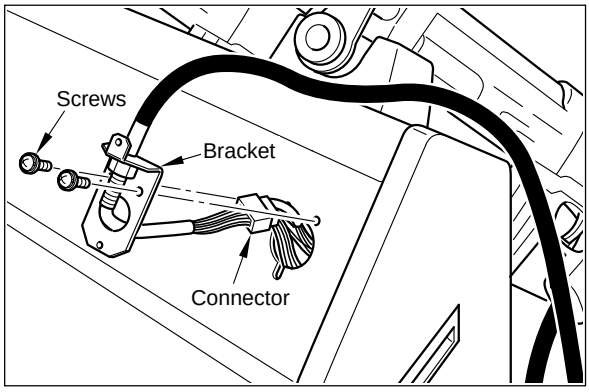

5 Mount a new gun unit in the reverse order, and attach the cover which was detached in Step **2**.

6 Couple the units (separated in Step **2** above) in the reverse order. Then plug in the power cord and turn ON the power to start the machine. (See page 25.)

7 Then, go to the test mode. Check the gun performance by “INPUT CHECK” on the “I/O CHECK” screen on page 33, and check the reaction of the gun and calibrate the gun by “GUN CHECK” on page 35.

9-5 Resetting the circuit protector

If an overcurrent or short circuit occurs, the circuit protector will be automatically actuated to protect the electric circuits of the game machine. When resetting the circuit protector, turn OFF the main power switch, unplug the power cord from the receptacle, eliminate the cause, and then press the button of the circuit protector.

How to reset the circuit protector

•Before resetting the circuit protector, be sure to turn OFF the main power switch and unplug the power cord from the receptacle.
•If the circuit protector trips soon again, immediately turn OFF the main power switch, unplug the power cord and contact your nearest dealer.
•There is high voltage inside the machine. Only the qualified industry specialist is allowed to open the back door. With the back door open, be very careful not to touch the monitor and its nearby parts.
•When opening the back door, be sure to turn OFF the main power switch and unplug the power cord from the receptacle.
•If the machine is in abnormal conditions and does not operate normally, immediately turn OFF the main power switch, unplug the power cord from the receptacle and contact your nearest dealer.

1 Be sure to turn OFF the main power switch and unplug the AC power cord from the receptacle.

2 Remove the cause of the trouble. Press the button on the circuit protector of the power unit.

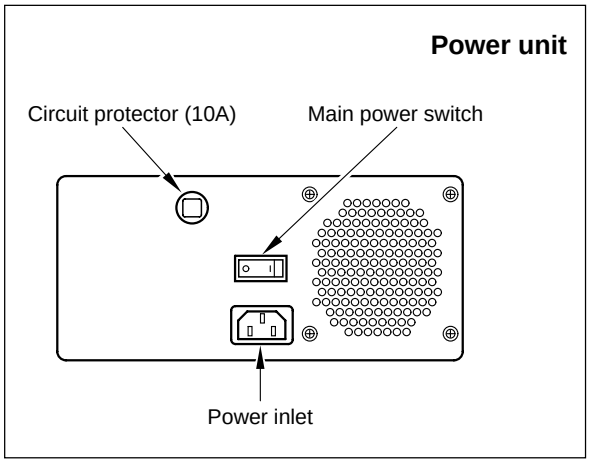

9-6 Troubleshooting

If the power switch is turned ON but the machine fails to start properly, take the following measures. If the machine still malfunctions or any other problem than described below occurs, immediately turn OFF the machine's main power switch, unplug the power cord from the receptacle and contact your nearest dealer.

Trouble	Possible causes and check points	Measures
Nothing onscreen, and fluorescent lamp (atop the center unit) failure to light up.	•No power turned ON. (Main power switch, Sub-power switch.)	•Turn ON the power switch. Check also the shop's circuit breaker. (See Page 25.)
	•Power cord disconnected from the machine or wall outlet.	•Reconnect the power cord tightly (See Page 25.)
	•Back door open or loosely closed.	•Screw down the back door tightly. (The door switch has been activated to cut off the power.) (See Page 25.)
	•Connectors not reconnected after the memory card has been set. Or connectors not properly reconnected between rear unit and center unit, as well as between center unit and front unit.	•Reconnect the connector. (See page 58 to 62,65.)
	•Circuit protector activated.	•Take an appropriate measure referring to page 75.
Nothing appearing onscreen, but title panel's fluorescent lamps on.	•Memory card not correctly set in PCB unit 1 or PCB unit 2.	•Check the memory card for wrong position. (See page 58 to 61.)
	•Connectors not reconnected after the memory card has been set. Or connectors not properly reconnected between rear unit and center unit, as well as between center unit and front unit.	•Reconnect the connector. (See page 58 to 62,65.)
	•PCB unit defective.	•Immediately turn OFF the main power switch, unplug the power cord from the receptacle and contact your nearest dealer.
	•Monitor defective.	
Fluorescent lamp failure to light up.	•Fluorescent lamp or glow lamp broken.	•Replace the fluorescent lamp or glow lamp with new one of the same type. (See page 70.)
	•Connectors not properly connected between rear unit and center unit.	•Reconnect the connector. (See page 62.)
Screen too dark or too bright. Or images out of position on left and right screens.	•Monitor maladjusted.	•Referring to "5-4 Adjusting the monitor", readjust the screen brightness and image position. (See page 48.)

Trouble	Possible causes and check points	Measures
Coins are put in, but the credits in “CREDIT” onscreen are not properly counted.	•Microswitch of the coin selector or coin selector defective.	•Check the performance, referring to “INPUT CHECK” on the “I/O CHECK” screen. If NG, replace the microswitch. If OK, replace the coin selector. (See page 33,34,69.)
Coin input port failure to light up.	•Lamp of the coin input port broken.	•Replace the lamp with new one of the same type. (See page 69.)
No sound or too loud (or too soft) sound.	•Sound level maladjusted. •Connectors of speakers disconnected.	•Make proper setting on the “SOUND OPTIONS” screen. (See page 41.) •Immediately turn OFF the main power switch, unplug the power cord from the receptacle and contact your nearest dealer.
“BAD” appearing repeatedly onscreen by “ROM CHECK” in test mode.	•Memory card defective.	•Immediately turn OFF the main power switch, unplug the power cord from the receptacle and contact your nearest dealer.
“HARDWARE ERROR (***)” displayed on screen.	•Memory card is broken. •PCB unit is broken. •Something wrong with the hardware.	•Immediately turn OFF the main power switch, unplug the power cord from the receptacle and contact your nearest dealer. •Jot down “***”, immediately turn OFF the main power switch, unplug the power cord and contact your nearest dealer.
Sensor does not react at all or reacts abnormally.	•Monitor glass covered by something. •Sensor(s) exposed to direct sunlight, strong light or infrared light. •Other game machine or the like using infrared ray set up near this machine. •Connectors not connected properly between rear unit and center unit or between center unit and front unit. •Trouble with sensor.	•Make sure the 10 sensors are not blocked. •Relocate the machine to a place not exposed to direct sunlight, strong light or infrared light. (See page 56.) •Change “FREQUENCY ID” by “GUN CHECK” on the “I/O CHECK” screen. If the same symptom persists, then relocate the machine.If the trouble persists, move this machine to other place. (See page 33,35) •Reconnect the connector. (See page 62,65.) •Check the performance, referring to “INPUT CHECK” on the “I/O CHECK” screen. Immediately turn OFF the main power switch, unplug the power cord and contact your nearest dealer.

Trouble	Possible causes and check points	Measures
Gun malfunctioning.	•Muzzle's coordinates sensor or posture-for-fire sensor exposed to direct sunlight, spotlight or infrared light source.	•Relocate the machine to a place not exposed to direct sunlight or light source such as spotlight. (See page 56.)
There is no reaction at all or occasionally when the gun is triggered.	•Connectors of gun unit disconnected.	•Check the connectors for poor contact. (See page 74.)
	•Gun unit defective.	•Check the performance on the "GUN CHECK" screen. If malfunctioning, replace the gun unit with new one. (See page 35,74.)
	•Muzzle's coordinates sensor or posture-for-fire sensor exposed to direct sunlight, spotlight or infrared light source.	•Relocate the machine to a place not exposed to direct sunlight or light source such as spotlight. (See page 56.)
	•Trigger microswitch or shoulder stock button switch defective.	•Check the performance, referring to "INPUT CHECK" on the "I/O CHECK" screen. If malfunctioning, contact your nearest dealer. (See page 34.)

10 Annex

10-1 Label locations and exploded view

Label

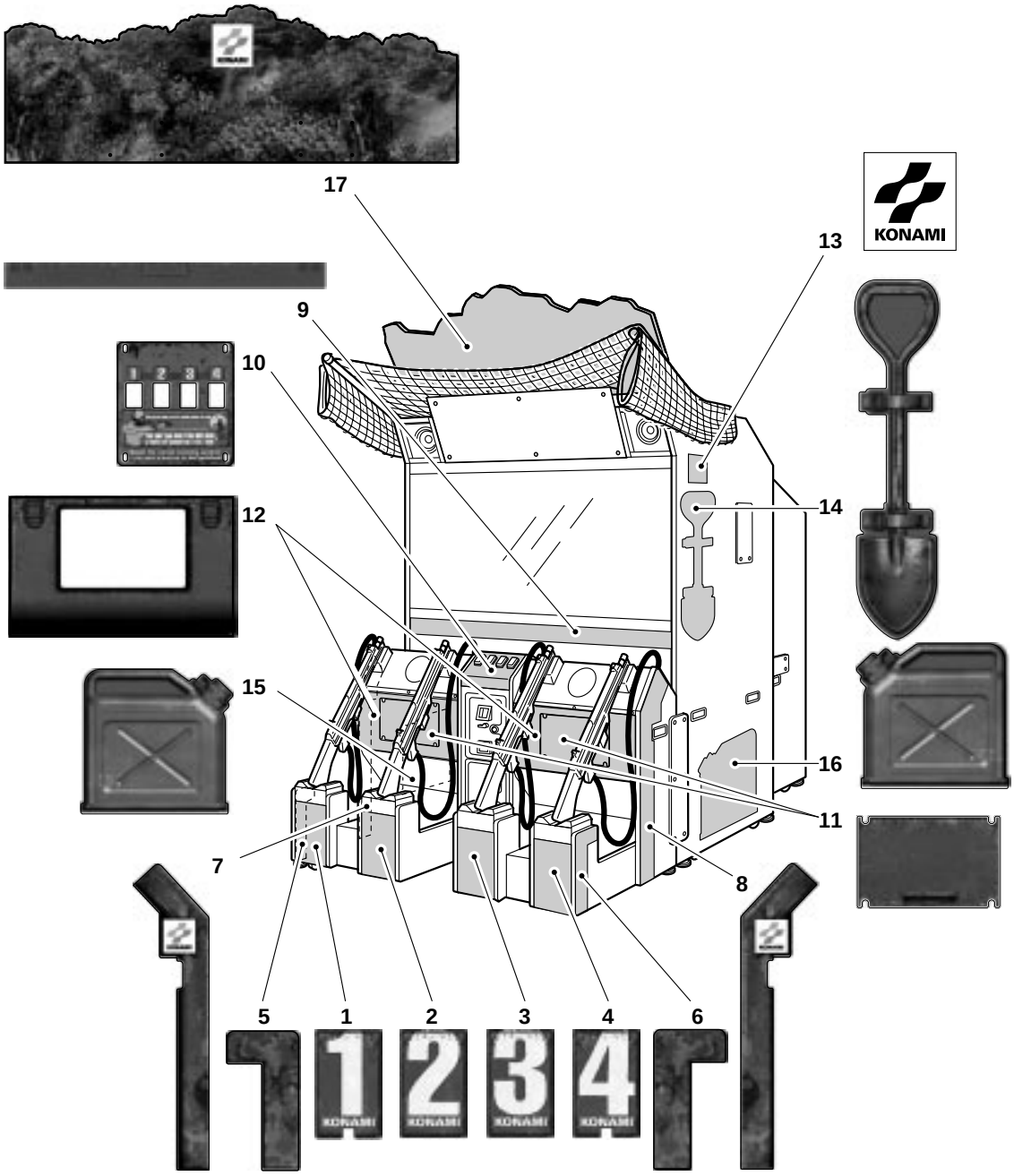

<Front unit left side> <Front unit right side>

No.	CODE No.	NAME	QTY	NOTE	No.	CODE No.	NAME	QTY	NOTE
1	0000127173	LABEL, 1	1		**11**	0000127178	LABEL, CARD	2	
2	0000127174	LABEL, 2	1		**12**	0000127177	LABEL, FRONT/A	2	
3	0000127175	LABEL, 3	1		**13**	0000061691	LABEL, KONAMI/M	2	
4	0000127176	LABEL, 4	1		**14**	0000127191	LABEL, SHOVEL	2	
5	0000127179	LABEL, SIDE/A/L	1		**15**	0000127192	LABEL, TANK/L	1	
6	0000127180	LABEL, SIDE/A/R	1		**16**	0000127203	LABEL, TANK/R	1	
7	0000127181	LABEL, SIDE/B/L	1		**17**	0000127298	POP/SD	1	Billboard
8	0000127182	LABEL, SIDE/B/R	1		—				
9	0000128084	LABEL, FRONT/SD	1		—				
10	0000186570	LABEL, PLAY/HD	1		—				

FIG.1 UNIT, GUN

NO.	CODE NO.	NAME	SPEC. /CATALOG TYPE	QTY	NOTE
1	0000126654	CASE, GUN(L)	PA/ABS	4	
2	0000126662	CASE, GUN(R)	PA/ABS	4	
3	0000126693	TRIGGER	POM	4	
4	0000126694	BUTTON	PC	4	
5	0000126695	BUTTON	PC	8	
6	0000126696	COVER, SENSOR	PMMA	4	
7	0000015540	FIXTURE, CHAIN	SS400	4	
8	0000190515	SPRING	SWPA	4	
9	0000190516	SPRING	SWPA	4	
10	0000190525	SHEET, INSULATION	PVC T0.1	4	
11	0000126505	#PCB UNIT	QMZ-2DGUN	4	
12	0000193626	ASS'Y, WIRING(GUNC)		4	
13		UNIT, PCB(J)		8	
14		UNIT, PCB(H)		4	
51	0000034946	SWITCH, MICRO	SW-68	4	
52	0000050347	SWITCH, MICRO	SS-5GL2T	4	
101		BOLT, HEXAGON SOCKET CAP	M3x8	20	
102		BOLT, HEXAGON SOCKET CAP	M3x20	24	
103		BOLT, HEXAGON SOCKET CAP	M3x25	44	
104		BOLT, HEXAGON SOCKET CAP	M3x35	8	
105		SCREW, CROSS P-TITE BIND	d3x10	24	
106		NUT, DOMED CAP	M3	96	
107		RING, O	AN6227/NO.15	4	
108		CLIP, COATING	CC-1003	4	

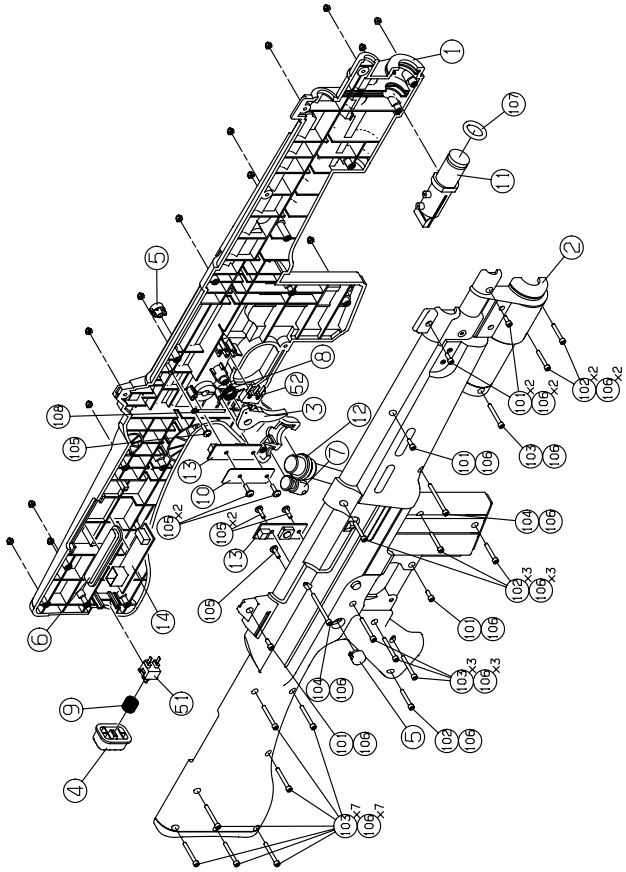

FIG.2 ASS'Y, BOX DC

NO.	CODE NO.	NAME	SPEC. /CATALOG TYPE	QTY	NOTE
1	0000190472	BOX, DC	SPCC T1.2	1	
2	0000190480	BRACKET, REGULATOR	SPGC T1.2	1	
3	0000207052	COVER, BOX	SPCC T1.2	1	
51	0000059336	REG, SWICHING	VS150B-12/CE	1	
52	0000059335	REG, SWICHING	VS100B-5/CE	1	
53	0000111114	BLOCK, TERMINAL	OTB-551-6P-5674	1	
54	0000003209	MOTOR, FAN	FBA09A12M	1	
55	0000031056	INLET, AC	M1816	1	
56	0000036921	PROTECTOR, CIRCUIT	NRF110-10A	1	
57	0000003180	FILTER, NOISE	MAS-1210-33	1	
58	0000110013	SWITCH, ROCKER	AJ8201BT	1	
101		SCREW, CROSS PAN SEMS	M3×5	8	SW, PW
102		SCREW, CROSS PAN SEMS	M4×10	11	SW, PW
103		SCREW, CROSS PAN SEMS	M4×35	4	SW, PW
104		NUT, HEXAGON WITH FLANGE	M4	5	
105		SPACER, BRASS	BSB-308	8	

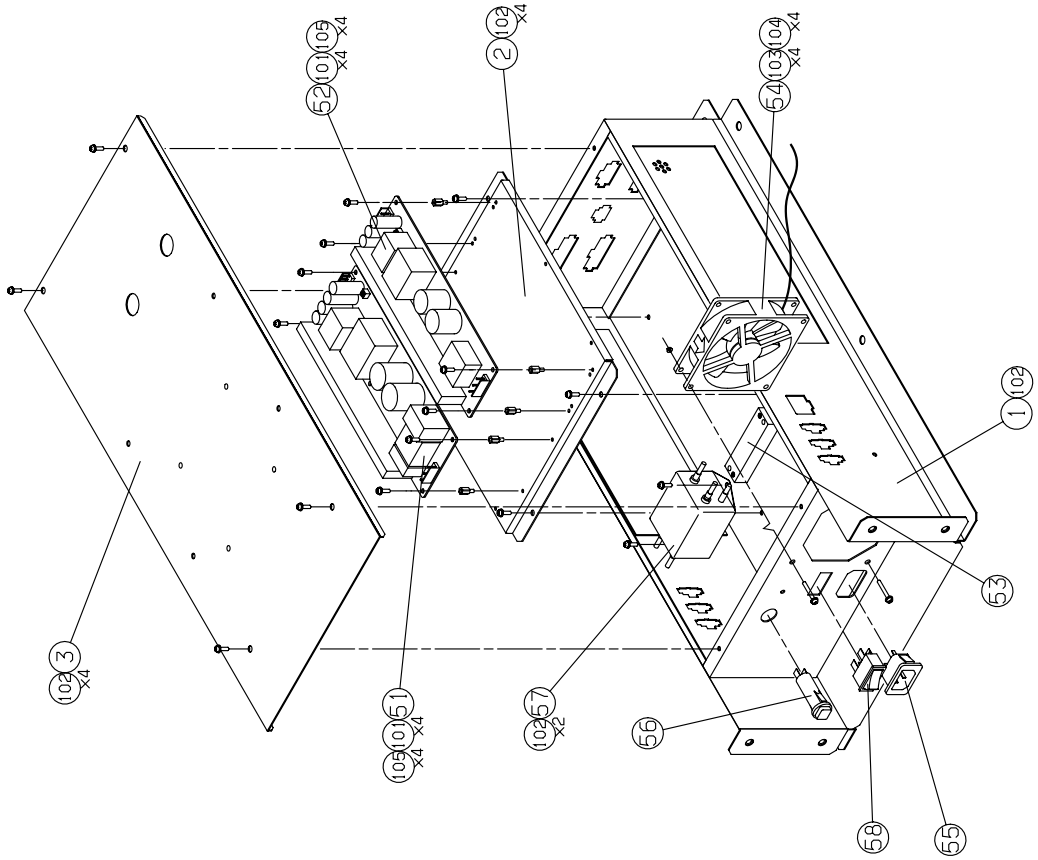

FIG.3 ASS'Y, NET

NO.	CODE NO.	NAME	SPEC. /CATALOG TYPE	QTY	NOTE
1	0000207707	SHEET, NET	TARPAULIN	1	
2	0000207712	ROPE, WIRE	SUS304	1	
3	0000190493	PIPE	STKMØ38.1 T1.6	1	
4	0000190494	PIPE	STKMØ38.1 T1.6	1	
5	0000190506	FIXTURE, PIPE	SECC T2.3	2	
101		SCREW, CROSS TRUSS	M5x15	14	

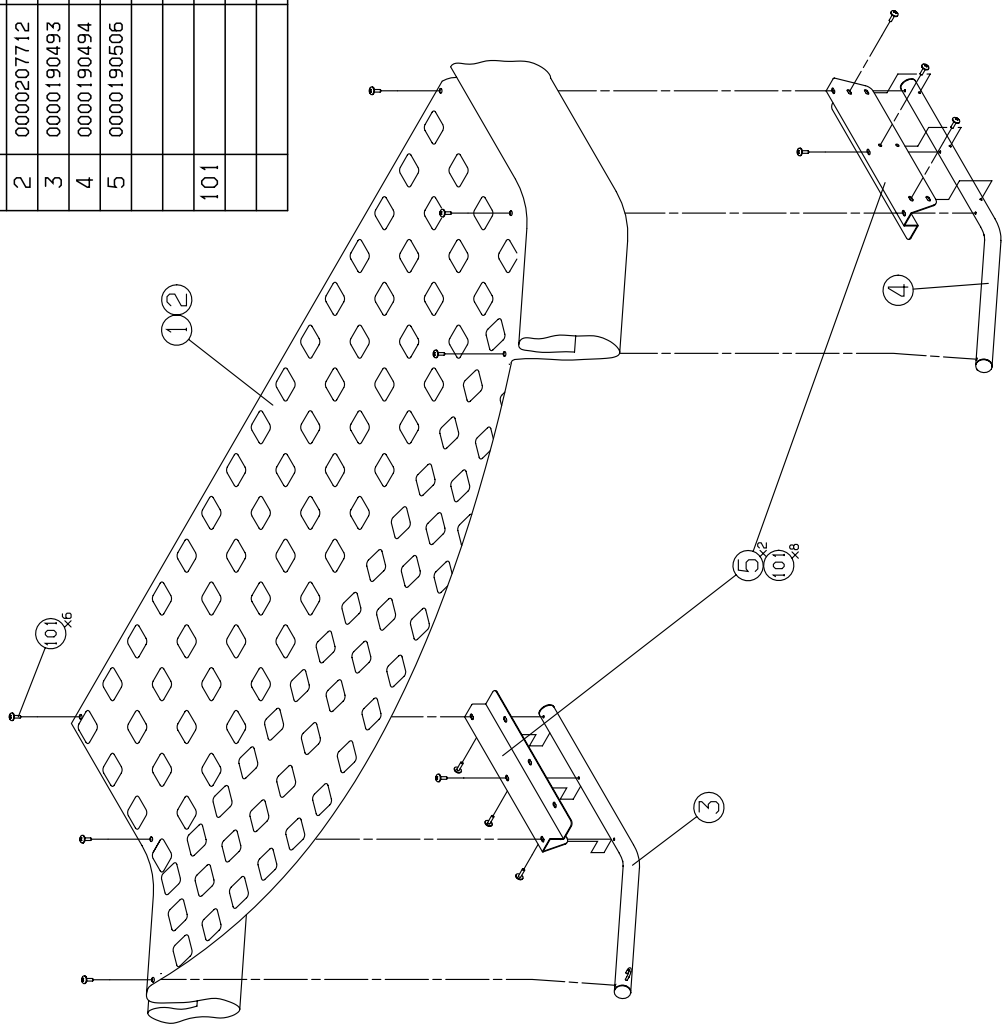

FIG.4 ASS'Y

NO.	CODE NO.	NAME	SPEC./CATALOG TYPE	QTY	NOTE
1	0000102028	BASE, COIN BOX	SPCC T1.6	1	
2	0000096147	BRACKET, COUNTER	SPCC T1.2	1	
3	0000106667	PLATE, SERVICE	SPCC T1.2	1	
4	0000096148	COVER, COUNTER	SPCC T1.2	1	
51	0000110050	COUNTER	DC 12V	1	
52	0000086341	DOOR, COIN	NAD-W1-KBHA	1	
53	0000001676	LOCK	NS-801-1 W/2(5000)	1	
54	0000005537	LOCK	NS-812 W/2(RANDOM)	1	
55	0000004799	PLATE, LOCK	NO.2	2	
56	0000110013	SWITCH, ROCKER	AJ8201BT	1	
57	0000005098	SWITCH, PUSH	DS-412-2P	2	
101		SCREW, CROSS PAN SEMS	M4x10	5	SW, PW
102		WASHER, PLAIN	d8	2	D18, T2.0
103		NUT, HEXAGON WITH FLANGE	M4	1	

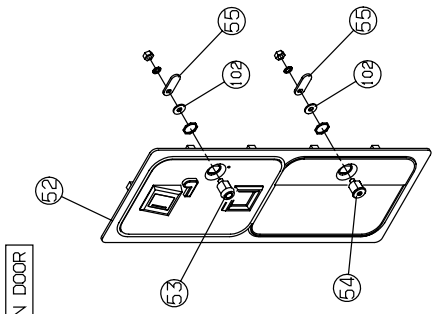

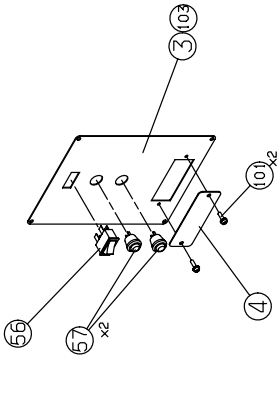

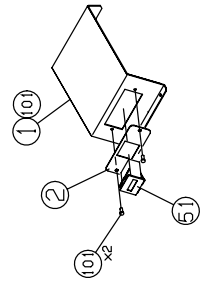

FIG.5 UNIT, CABINET FRONT(1/2)

NO.	CODE NO.	NAME	SPEC. /CATALOG TYPE	QTY	NOTE
1	0000190452	CABINET, FRONT	PLYWOOD T18, 15	1	
2	0000190467	COVER, REAR	PLYWOOD T15, 12	1	
3	0000190469	BOARD, PCB	PLYWOOD T12	1	
4	0000190470	BOARD, PCB	PLYWOOD T12	1	
5	0000190511	COVER, PCB	SECC T1.2	2	
7	0000126503	#PCB UNIT	QMZ-2DCPU	2	
8		UNIT, PCB(D)		1	
9		UNIT, PCB(B)		1	
51	0000072591	SET, ADJUSTER	A-SET	4	
101		SCREW, CROSS TRUSS	M6x30	11	
102		SCREW, CROSS PAN SEMS	M3x8	4	SW, PW
103		SCREW, CROSS PAN SEMS	M6x20	8	SW, PW
104		BOLT, WING	M6x25	4	
105		SCREW, CROSS WOOD FLAT	d3.1x13	4	
106		SCREW, CROSS WOOD ROUND	d2.7x20	8	
107		SCREW, CROSS WOOD ROUND	d3.1x13	4	
108		WASHER, PLAIN	d6	8	D20, T1.6
109		SPACER, BRASS	BSB-317	4	
110		SPACER, LASE LOCK	LL-2	4	

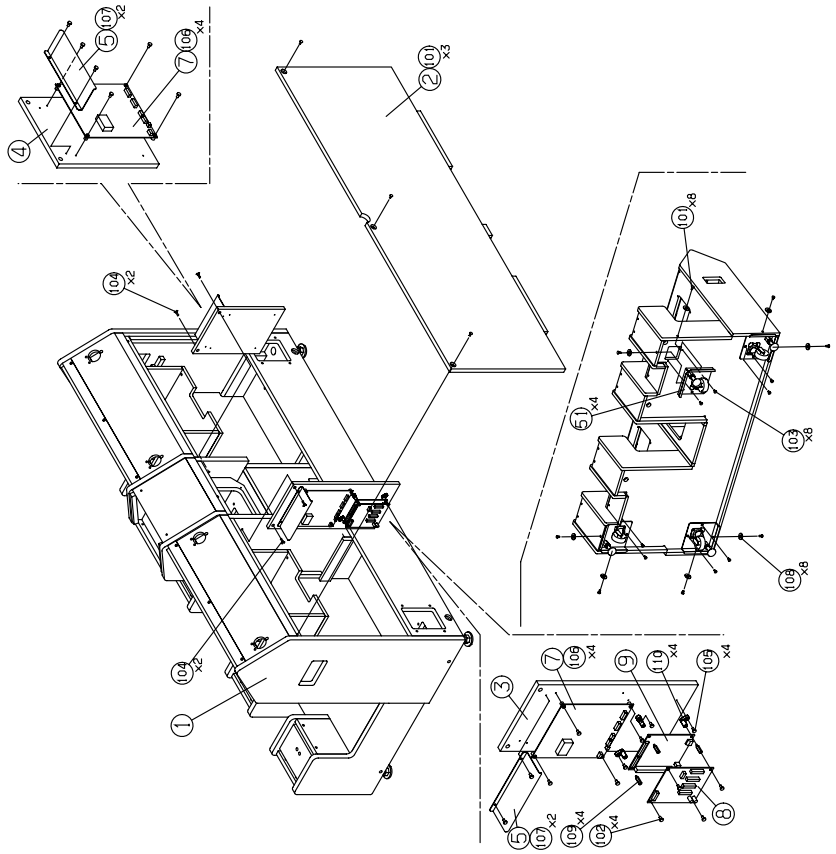

FIG.6 UNIT, CABINET FRONT(2/2)

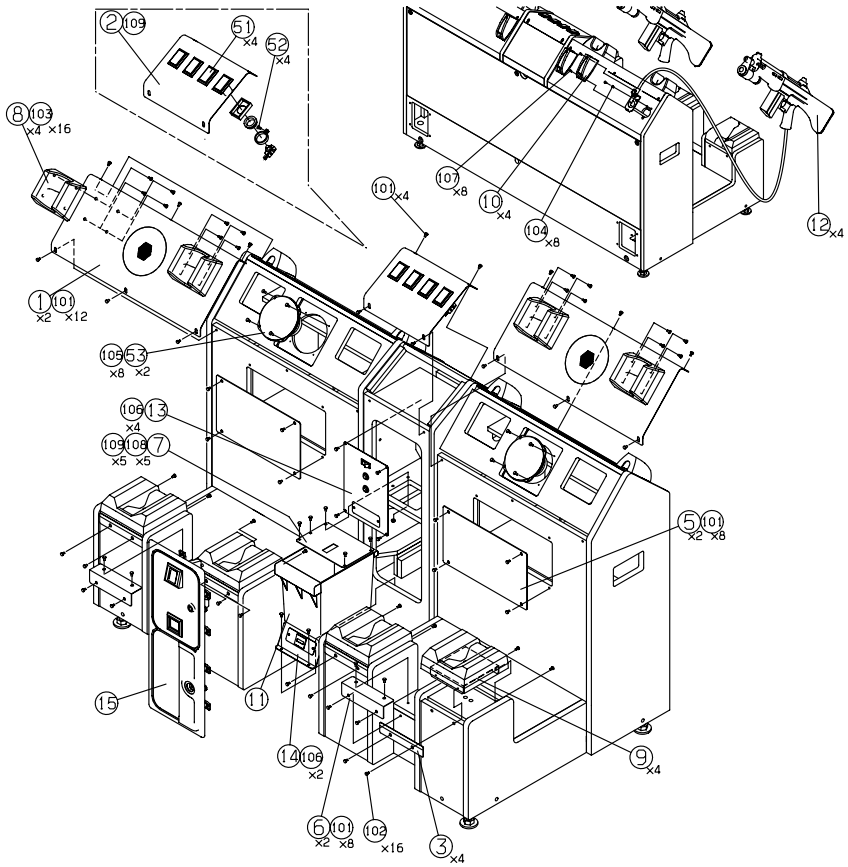

NO.	CODE NO.	NAME	SPEC./CATALOG TYPE	QTY	NOTE
1	0000190491	COVER, FRONT	SECC T1.2	2	
2	0000190495	PLATE, SWITCH	SECC T1.2	1	
3	0000190499	PLATE, COVER	SECC T1.2	4	
5	0000190508	PLATE, COVER	SECC T1.6	2	
6	0000190513	PLATE, COVER	SECC T1.2	2	
7	0000193608	PLATE, COIN	SPCC T1.2	1	
8	0000183871	HOLDER	UR FORM	4	
9	0000183870	HOLDER	UR FORM	4	
10	0000126697	COVER, CABLE	PC	4	
11	0000006850	BOX, COIN	ABS	1	
12		UNIT, GUN		4	
13		ASS'Y, SERVICE		1	
14		ASS'Y, COIN BASE		1	
15		ASS'Y, COIN DOOR		1	
51	0000123921	BUTTON, PUSH	OBSA-45UK-Y/W-LED-Y	4	
52	0000002412	CLIP, BUTTON	OBSA-BK	4	
53	0000036900	SPEAKER	PD12333BON	2	
101		SCREW, CROSS TRUSS	M5×15	32	
102		SCREW, CROSS TRUSS	M5×25	16	
103		SCREW, CROSS PAN SEMS	M5×15	16	SW, PW
104		SCREW, CROSS PAN SEMS	M6×20	8	SW, PW
105		SCREW, CROSS TAPPING TRUSS	d3.5×12	8	
106		SCREW, CROSS WOOD ROUND	d3.1×13	6	
107		BOLT, HEXAGON SOCKET BUTTON	M4×10	8	
108		BOLT, CAP SQUARE NECK	M4×25	5	
109		NUT, HEXAGON WITH FLANGE	M4	6	

FIG.7 ASS'Y, SENSOR

NO.	CODE NO.	NAME	SPEC./CATALOG TYPE	QTY	NOTE
1	0000207028	FRAME, SENSOR	SPCC T1.2	1	
2	0000207027	FRAME, SENSOR	SPCC T1.2	1	
3	0000208825	ADJUSTER, MIRROR	SECC T1.2	1	
4	0000190520	COVER, SENSOR	IR FILTER/T2	10	
5	0000126504	#PCB, UNIT	OMZ-2DLED	10	
101		SCREW, CROSS TRUSS	M6X45	1	
102		NUT, HEXAGON WITH FLANGE	M3	20	
103		NUT, HEXAGON	M6	2	
104		WASHER, PLAIN	d6	1	D20, T1.6

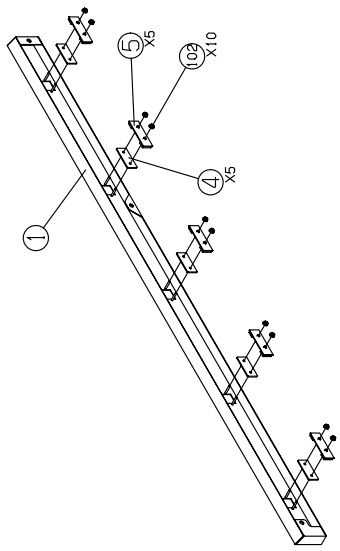

ASS'Y, SENSOR(A)

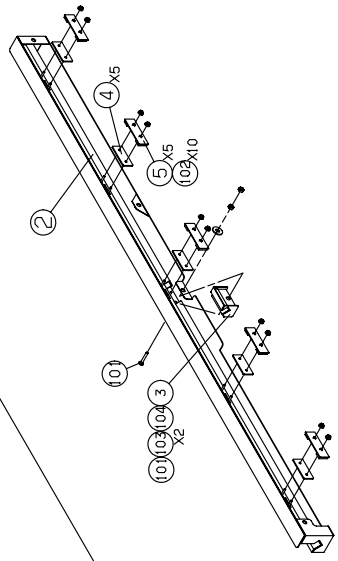

ASS'Y, SENSOR(B)

FIG.8 UNIT, CABINET CENTER(1/4)

NO.	CODE NO.	NAME	SPEC./CATALOG TYPE	QTY	NOTE
1	0000218630	CABINET, CENTER	PLYWOOD T18, 15, 12	1	
2	0000206933	BRACKET, MONITOR	SPCC T3.2	2	
3	0000207083	BRACKET, PCB	SPCC T1.2	1	
11	0000072591	SET, ADJUSTER	A-SET	4	
12	0000126509	MONITOR, FLAT	D29CP55	1	
101		SCREW, CROSS TRUSS	M6X30	8	
102		SCREW, CROSS PAN SEMS	M3X10	2	SW, PW
103		SCREW, CROSS PAN SEMS	M6X30	12	SW, PW
104		SCREW, CROSS WOOD ROUND	d3.1X13	4	
105		NUT, HEXAGON WITH FLANGE	M4	1	
106		NUT, HEXAGON WITH FLANGE	M8	4	
107		WASHER, PLAIN	d6	8	D20, T1.6
108		WASHER, PLAIN	d10	4	
110		WASHER, PLAIN	CC-0307-08	4	

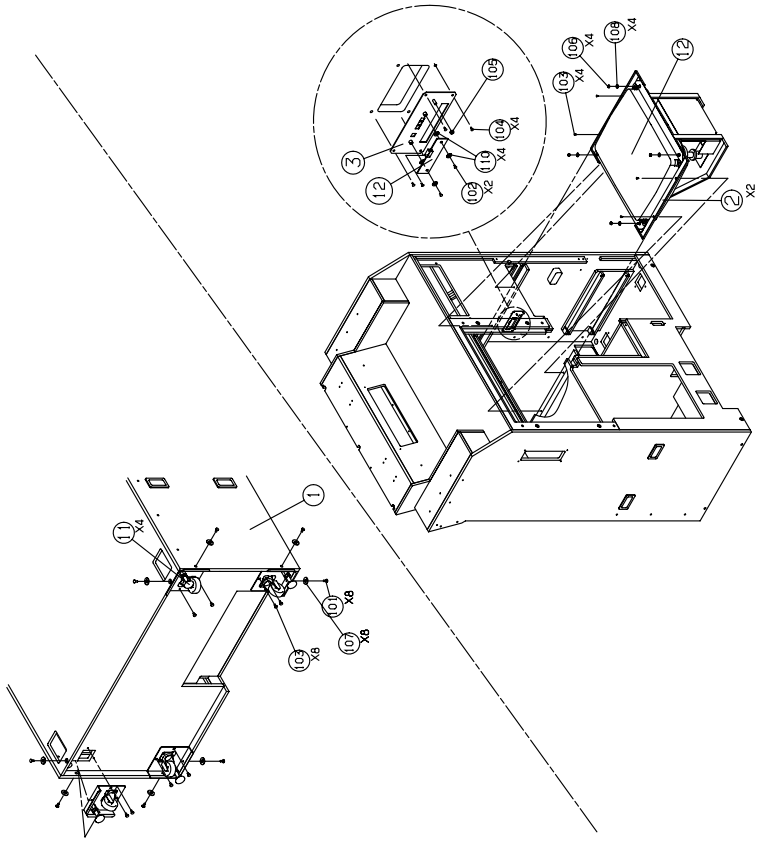

FIG.9 UNIT, CABINET CENTER(2/4)

NO.	CODE NO.	NAME	SPEC. /CATALOG TYPE	QTY	NOTE
1	0000207777	FRAME, MONITOR	MDF T4	1	
2		ASS'Y, SENSOR(A)		1	
3		ASS'Y, SENSOR(B)		1	
4	0000207076	FIXTURE, MIRROR	SECC T1.2	1	
5	0000207711	MIRROR, HALF	T6	1	
6	0000207813	RUBBER, EDGE	NP	1	
101		SCREW, CROSS TRUSS	M4×15	5	
102		SCREW, CROSS PAN SEMS	M6×25	6	SW, PW
103		SCREW, CROSS TRUSS	M6×15	2	
104		SCREW, CROSS TRUSS	M6×30	1	
105		NUT, HEXAGON	M6	1	
106		WASHER, PLAIN	d6	1	D20, T1.6

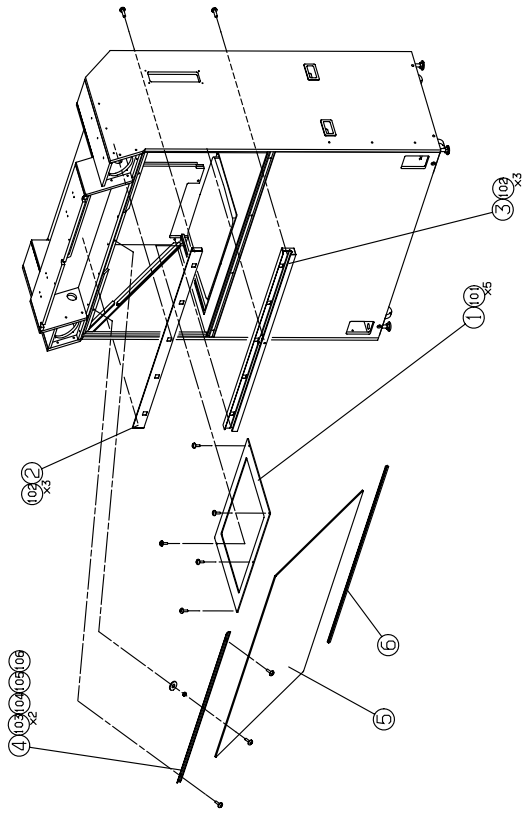

FIG.10 UNIT, CABINET CENTER(3/4)

NO.	CODE NO.	NAME	SPEC./CATALOG TYPE	QTY	NOTE
1	0000218632	FIXTURE, GLASS	SPCC T1.2	1	
2	0000207075	FIXTURE, GLASS	SPCC T1.2	1	
3	0000207079	FIXTURE, TITLE	SPCC T1.6,1.2	1	
4	0000207080	FIXTURE, TITLE	SECC T1.2	1	
5	0000207084	COVER, MAINTENANCE	SPCC T1.2	1	
6	0000190521	PLATE, TITLE	PMMA T5	1	
7	0000207710	GLASS, MONITOR	T5	1	
8	0000207032	COVER, SPEAKER	SPCC T1.2	1	
9	0000207073	COVER, SPEAKER	SPCC T1.2	1	
10	0000207085	COVER, MAINTENANCE	SPCC T1.2	1	
51	0000002616	SPEAKER	PD16239B	2	
52	0000110999	LAMP.F.WITH HOLDER	HZ325L-VR3(R)N	1	
101		SCREW, CROSS TRUSS	M5x15	29	
102		SCREW, CROSS TRUSS	M5x20	8	
103		SCREW, CROSS PAN SEMS	M6x20	2	SW, PW
104		SCREW, CROSS TAPPING TRUSS	d3.5x12	8	
105		WASHER, PLAIN	d8	2	

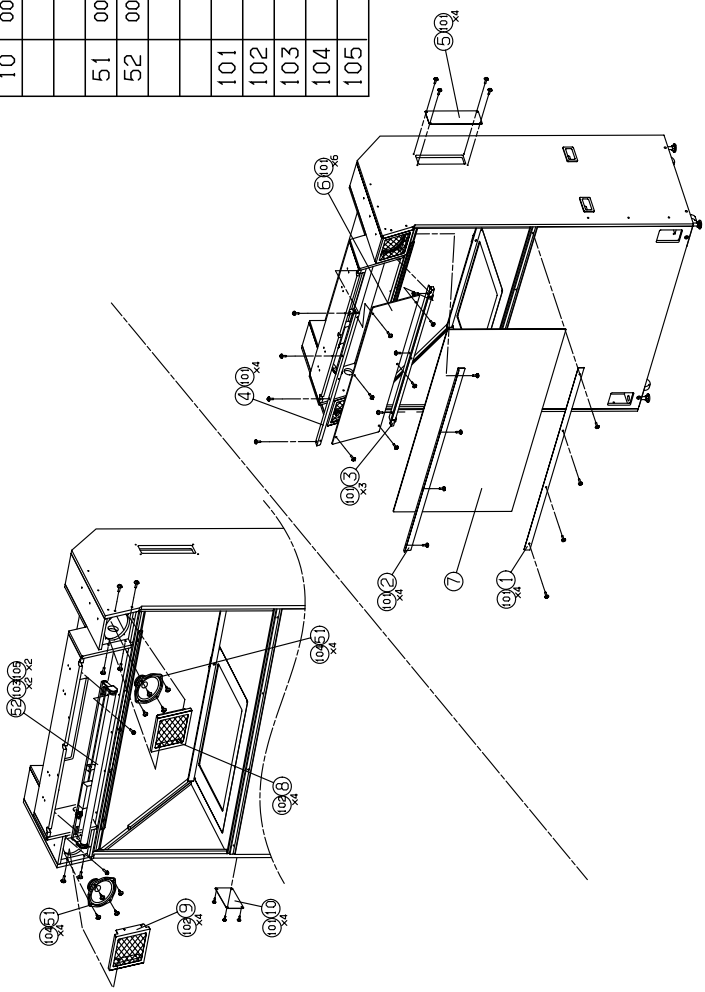

FIG.11 UNIT, CABINET CENTER(4/4)

NO.	CODE NO.	NAME	SPEC. /CATALOG TYPE	QTY	NOTE
1	0000207779	BOARD, PCB	PLYWOOD T12	2	
2	0000207081	PLATE, NUT	SPCC T2.3	1	
3	0000207082	PLATE, NUT	SPCC T2.3	1	
4	0000038221	BRACKET, SWITCH	SPCC T1.6	1	
5		UNIT, PCB BOX(1)		1	
6		UNIT, PCB BOX(2)		1	
51	0000038413	BUSH, CORD	MP1060	1	
52	0000108553	SWITCH, DOOR	AV122535A	1	
101		SCREW, CROSS TRUSS	M6x15	4	
102		SCREW, CROSS PAN SEMS	M4x10	1	
103		BOLT, WING	M5x25	4	
104		SCREW, CROSS WOOD ROUND	d3.1x13	12	
105		WASHER, PLAIN	d6	4	D20, T1.6
7	0000207774	COVER, REAR	PLYWOOD T15,12	1	
8	0000207776	COVER, REAR	PLYWOOD T15,12	1	
9	0000207026	PLATE, CONNECTOR	SPCC T1.0.8	1	
10	0000052370	COVER, DUCT	SECC T1.2	1	
11	0000114216	COVER, LAMP	SECC T1.2	1	
12	0000038230	PLATE, SWITCH	SECC T2.3	1	
106		SCREW, CROSS TRUSS	M6x20	8	
107		SCREW, CROSS TRUSS	M6x30	2	
108		SCREW, CROSS TAPPING TRUSS	d4x12	14	
109		SCREW, CROSS WOOD ROUND	d3.1x13	4	

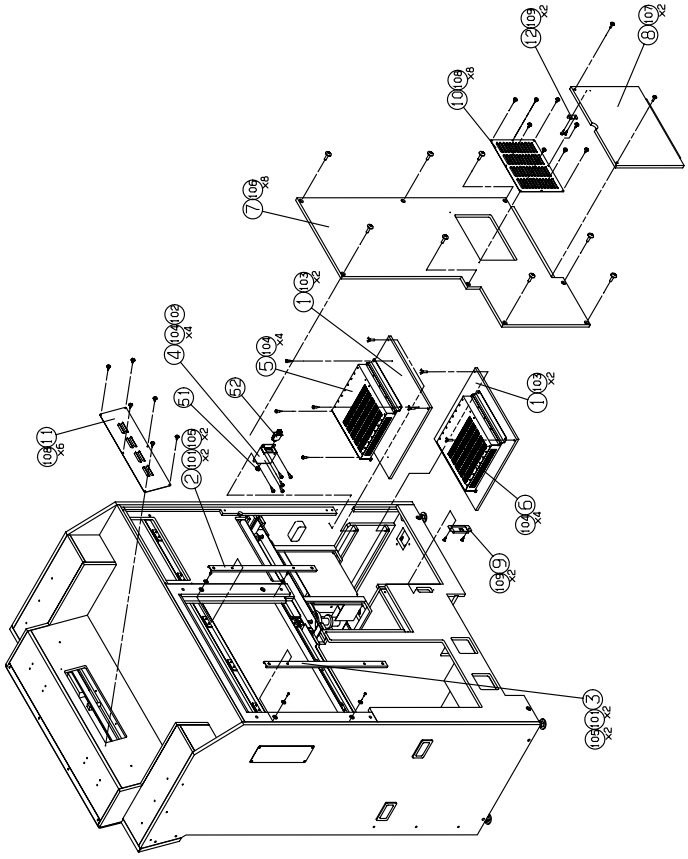

FIG.12 UNIT, CABINET REAR

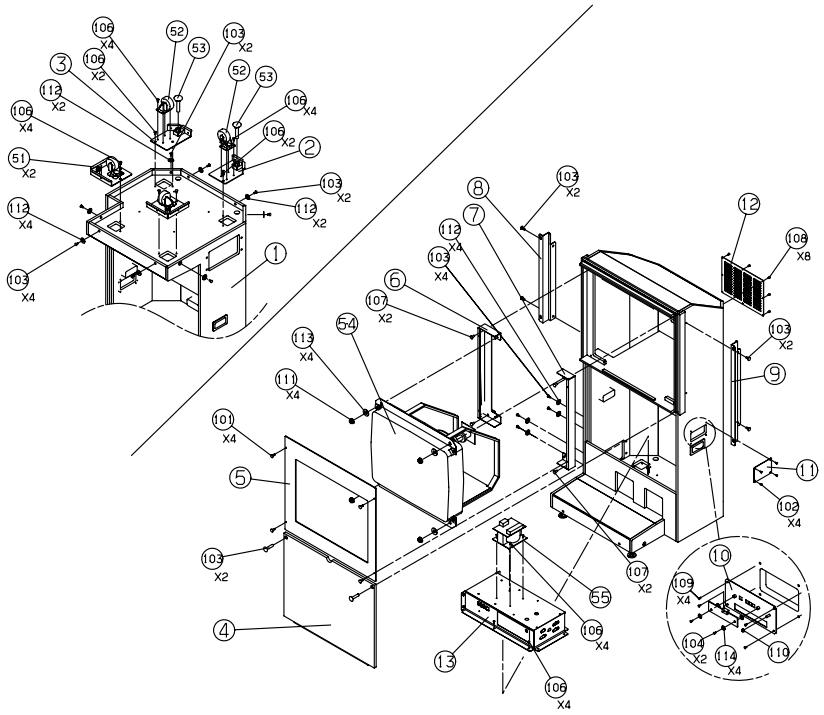

NO.	CODE NO.	NAME	SPEC./CATALOG TYPE	QTY	NOTE
1	0000218631	CABINET, REAR	PLYWOOD T18, 15	1	
2	0000207023	BRACKET, ADJUSTER	SPCC T3.2	1	
3	0000207024	BRACKET, ADJUSTER	SPCC T3.2	1	
4	0000207775	COVER, FRONT	PLYWOOD T15, 12	1	
5	0000207778	FRAME, MONITOR	MDF T4	1	
6	0000207029	BRACKET, MONITOR	SPCC T3.2, 2.3	1	
7	0000207030	BRACKET, MONITOR	SPCC T3.2, 2.3	1	
8	0000207077	JOINT	SECC T2.3	1	
9	0000207078	JOINT	SECC T2.3	1	
10	0000207083	BRACKET, PCB	SPCC T1.2	1	
11	0000207086	COVER, MAINTENANCE	SPCC T1.2	1	
12	0000052370	COVER, DUCT	SECC T1.2	1	
13		UNIT, DC POWER		1	
51	0000102307	SET, CASTER	A-CASTER	2	
52	0000099502	CASTER	SG-75-BN	2	
53	0000109828	ADJUSTER	ADJ-M16-L75	2	
54	0000126509	MONITOR, FLAT	D29CP55	1	
55	0000077822	TRANSFORMER	500VA MULTI	1	
101		SCREW, CROSS TRUSS	M4x10	4	
102		SCREW, CROSS TRUSS	M5x15	4	
103		SCREW, CROSS TRUSS	M6x30	18	
104		SCREW, CROSS PAN SEMS	M3x10	2	SW, PW
106		SCREW, CROSS PAN SEMS	M6x20	24	SW, PW
107		SCREW, CROSS PAN SEMS	M6x30	4	SW, PW
108		SCREW, CROSS TAPPING TRUSS	d3.5x12	8	
109		SCREW, CROSS WOOD ROUND	d3.1x13	4	
110		NUT, HEXAGON WITH FLANGE	M4	1	
111		NUT, HEXAGON WITH FLANGE	M8	4	
112		WASHER, PLAIN	d6	12	D20, T1.6
113		WASHER, PLAIN	d10	4	
114		WASHER, PLAIN	CC-0307-08	4	

FIG.13 UNIT

NO.	CODE NO.	NAME	SPEC. /CATALOG TYPE	QTY	NOTE
1	0000190490	FIXTURE, POP	SECC T1.6	2	
2	0000207087	JOINT	SPCC T1.6	2	
3		UNIT, CABINET FRONT		1	
4		UNIT, CABINET CENTER		1	
5		UNIT, CABINET REAR		1	
6		ASS'Y, NET		1	
101		SCREW, CROSS TRUSS	M6x15	28	
102		BOLT, HEXAGON SOCKET BUTTON WA	M8x30	16	SW, PW
103		WASHER, PLAIN	d6	12	D20, T1.6

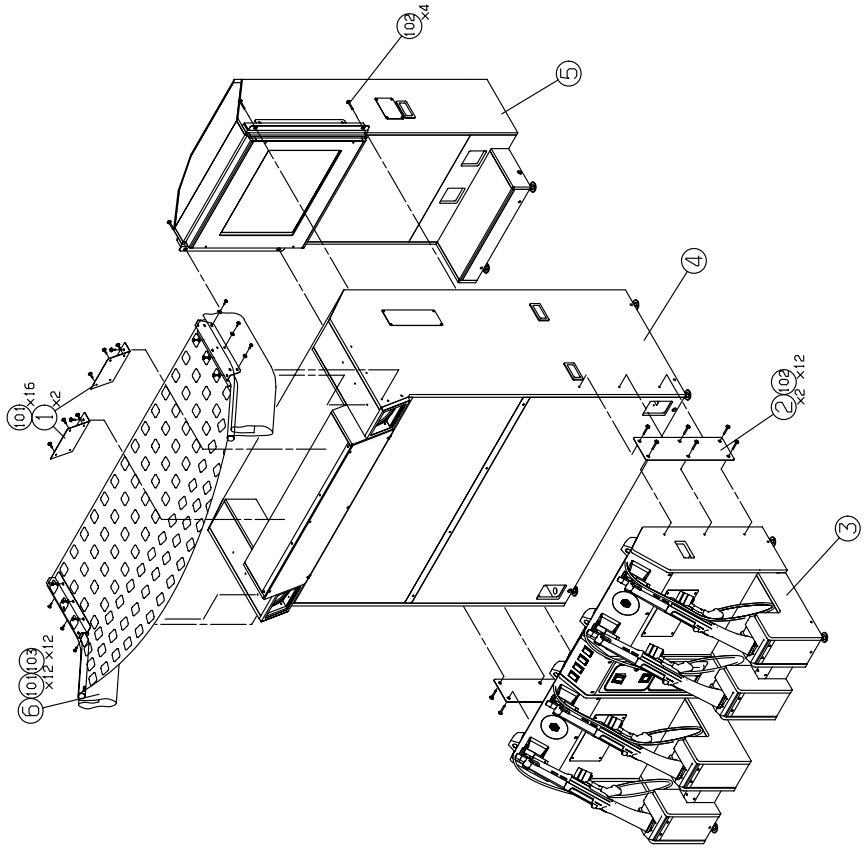

FIG.14 UNIT, ATTACHMENT

NO.	CODE NO.	NAME	MATERIAL/SPECIFICATION	QTY	NOTE
1		UNIT, CF-CARD		2	
2	0000036692	CABLE, AC	AC250V 8A	1	
3	0000001676	KEY, LOCK	NS-801-1 W/2(5000)	2	
4	0000005537	KEY, LOCK	NS-812 W/2(RANDOM)	2	
5	0000045353	WRENCH KEY, HEXAGON	B5	1	
6	0000114644	BAG, CONDUCTION	250x300 T0.05	2	
7	0000004366	BAG	75x110 T0.04	3	
8	0000115963	BAG	150x200 T0.05	2	
9	0000004319	BAG	230x350 T0.05	1	
10	0000218535	BOOK, MANUAL/HD		1	
11	0000218536	SHEET, MANUAL/HD			
101		SCREW, CROSS TRUSS	M6x15	28	
102		BOLT, HEXAGON SOCKET BUTTON WA	M8x30	16	SW, PW
103		WASHER, PLAIN	d6	12	D20, T1.6

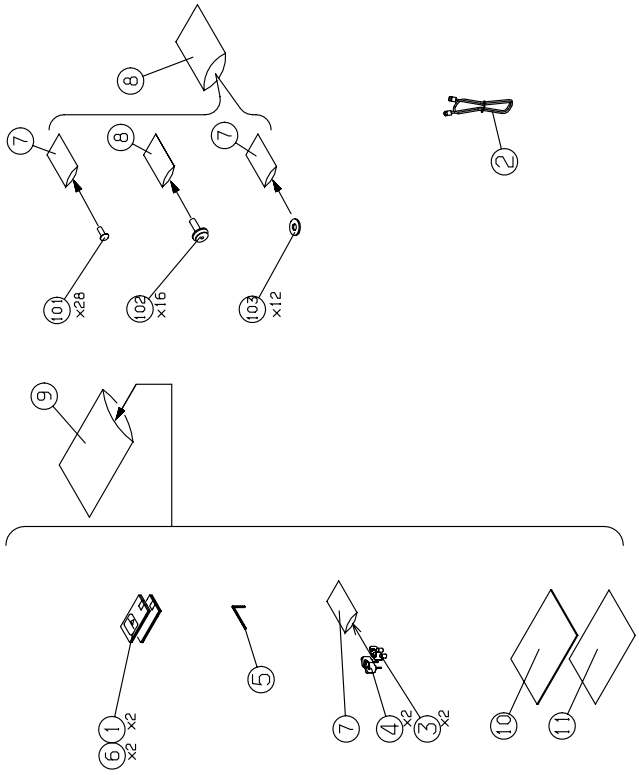

MEMO

10-2 Wiring diagram

Power unit

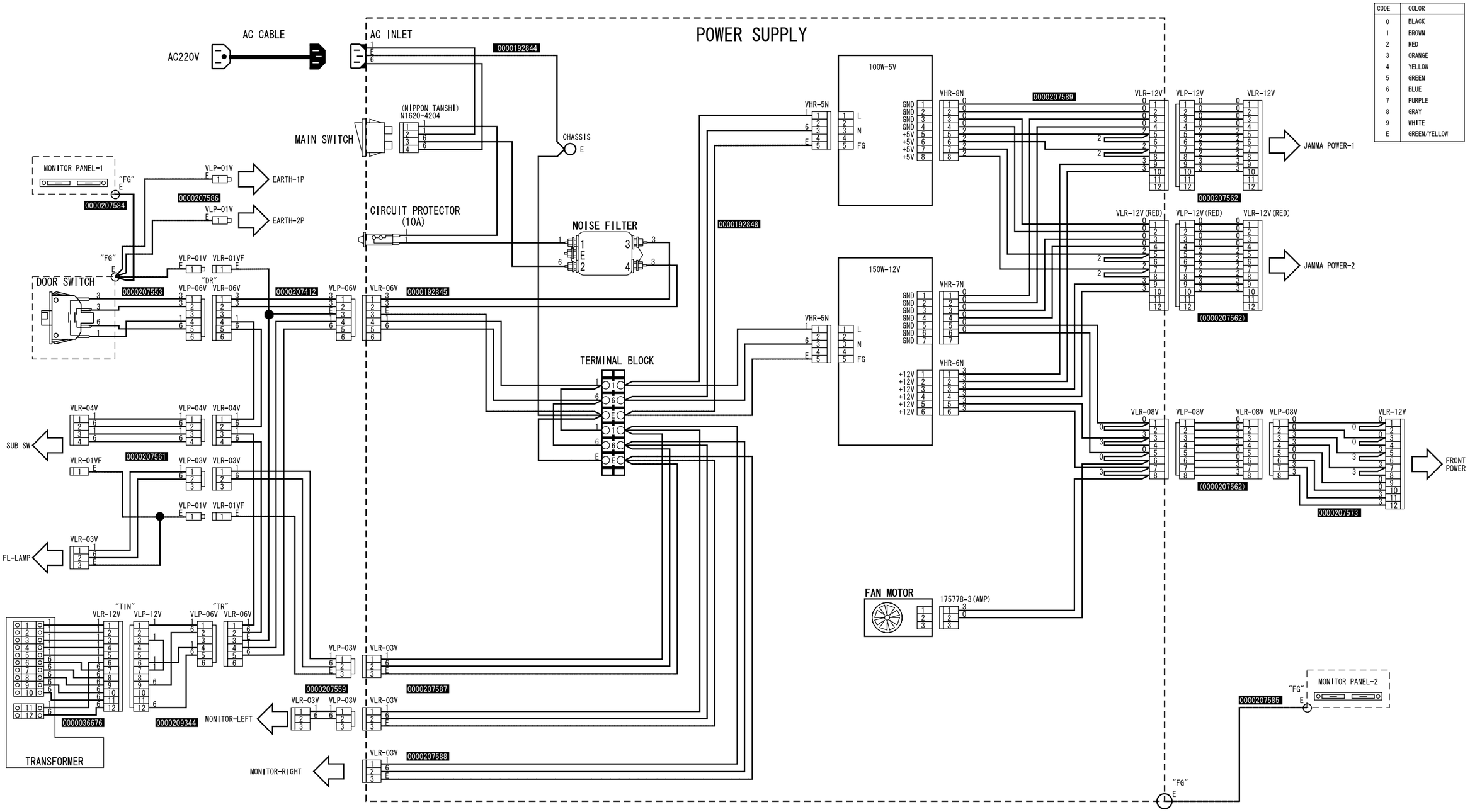

CODE	COLOR
0	BLACK
1	BROWN
2	RED
3	ORANGE
4	YELLOW
5	GREEN
6	BLUE
7	PURPLE
8	GRAY
9	WHITE
E	GREEN/YELLOW

2/6

Center unit

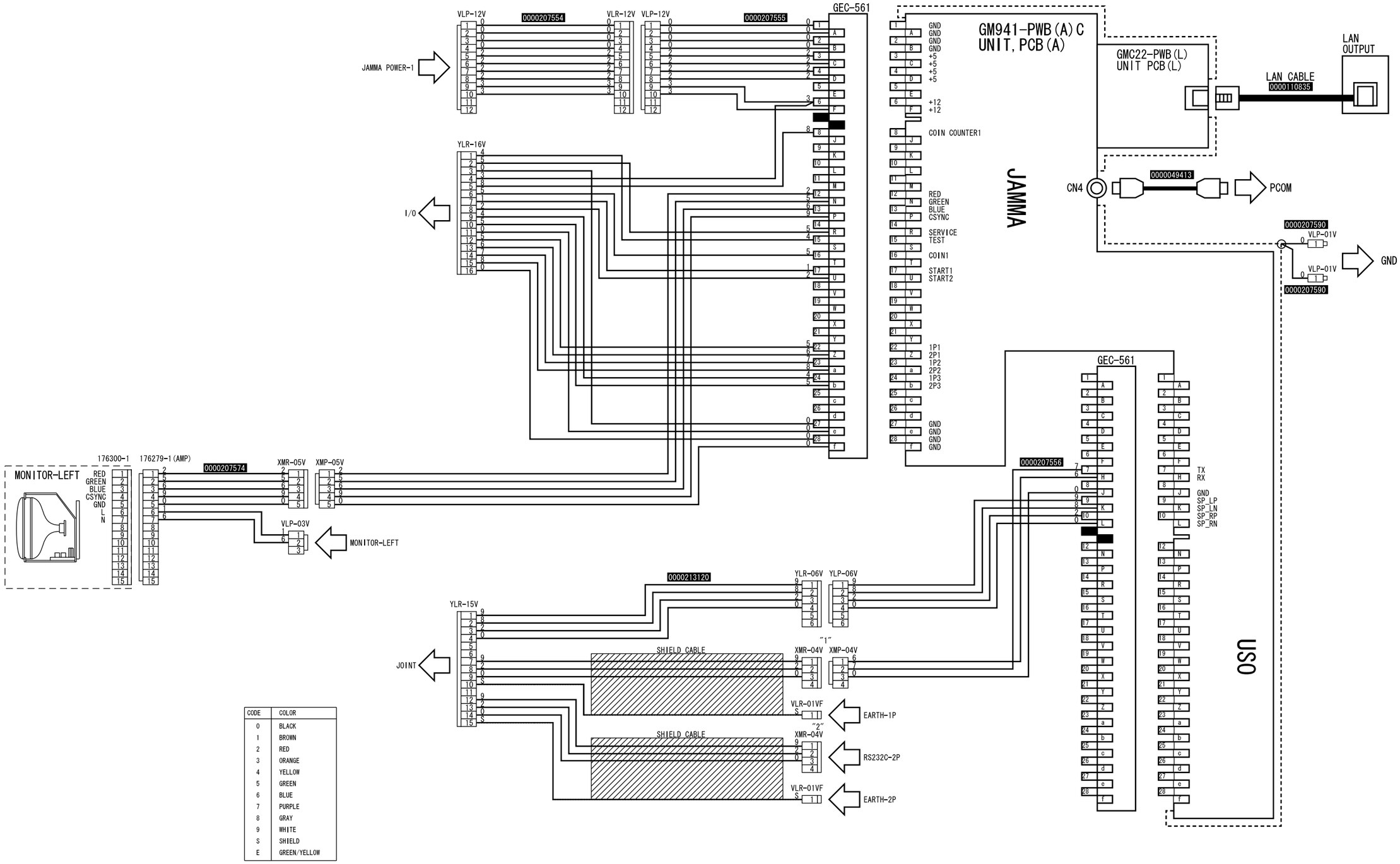

CODE	COLOR
0	BLACK
1	BROWN
2	RED
3	ORANGE
4	YELLOW
5	GREEN
6	BLUE
7	PURPLE
8	GRAY
9	WHITE
S	SHIELD
E	GREEN/YELLOW

3/6

Rear unit

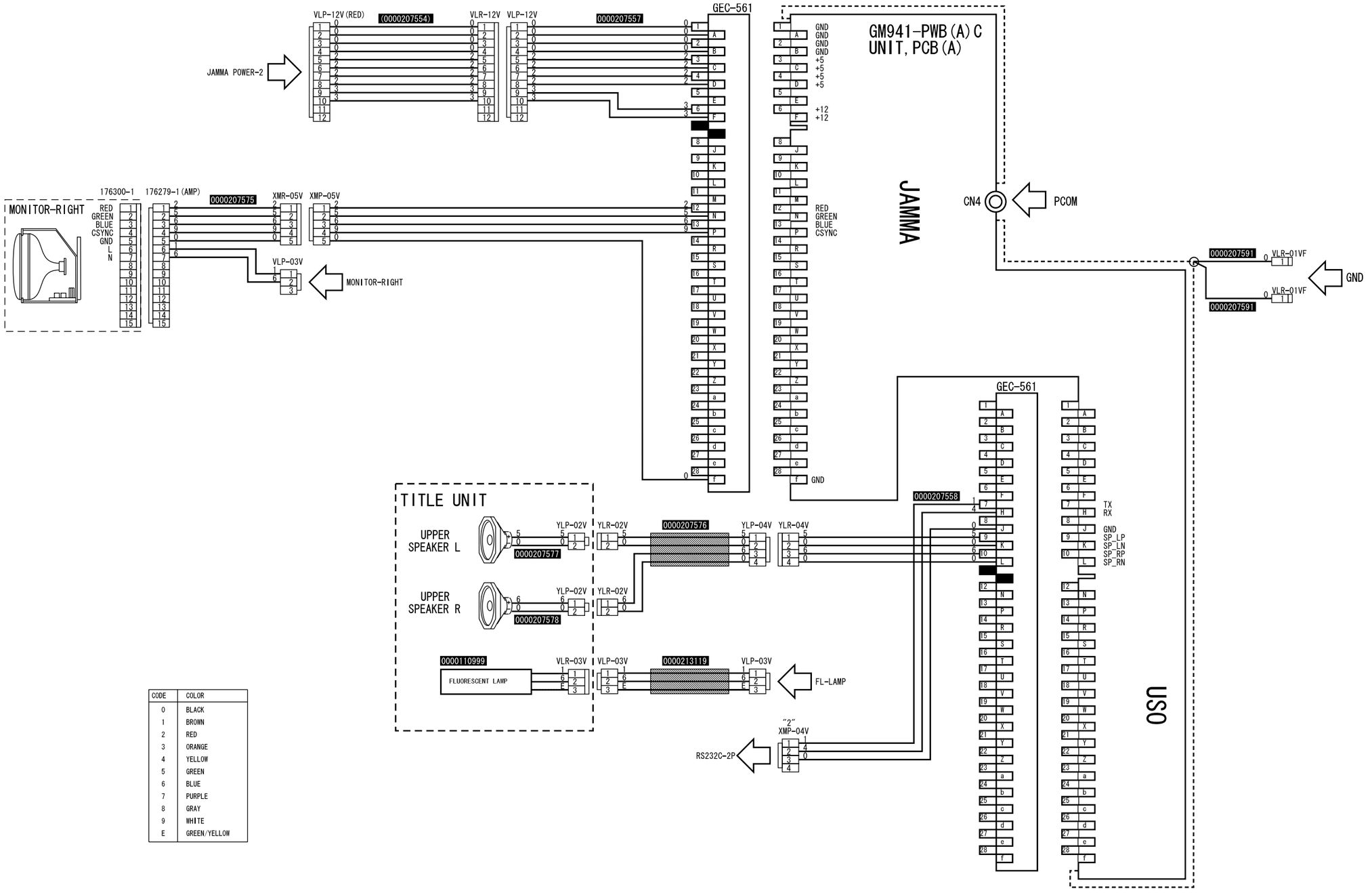

CODE	COLOR
0	BLACK
1	BROWN
2	RED
3	ORANGE
4	YELLOW
5	GREEN
6	BLUE
7	PURPLE
8	GRAY
9	WHITE
E	GREEN/YELLOW

4/6

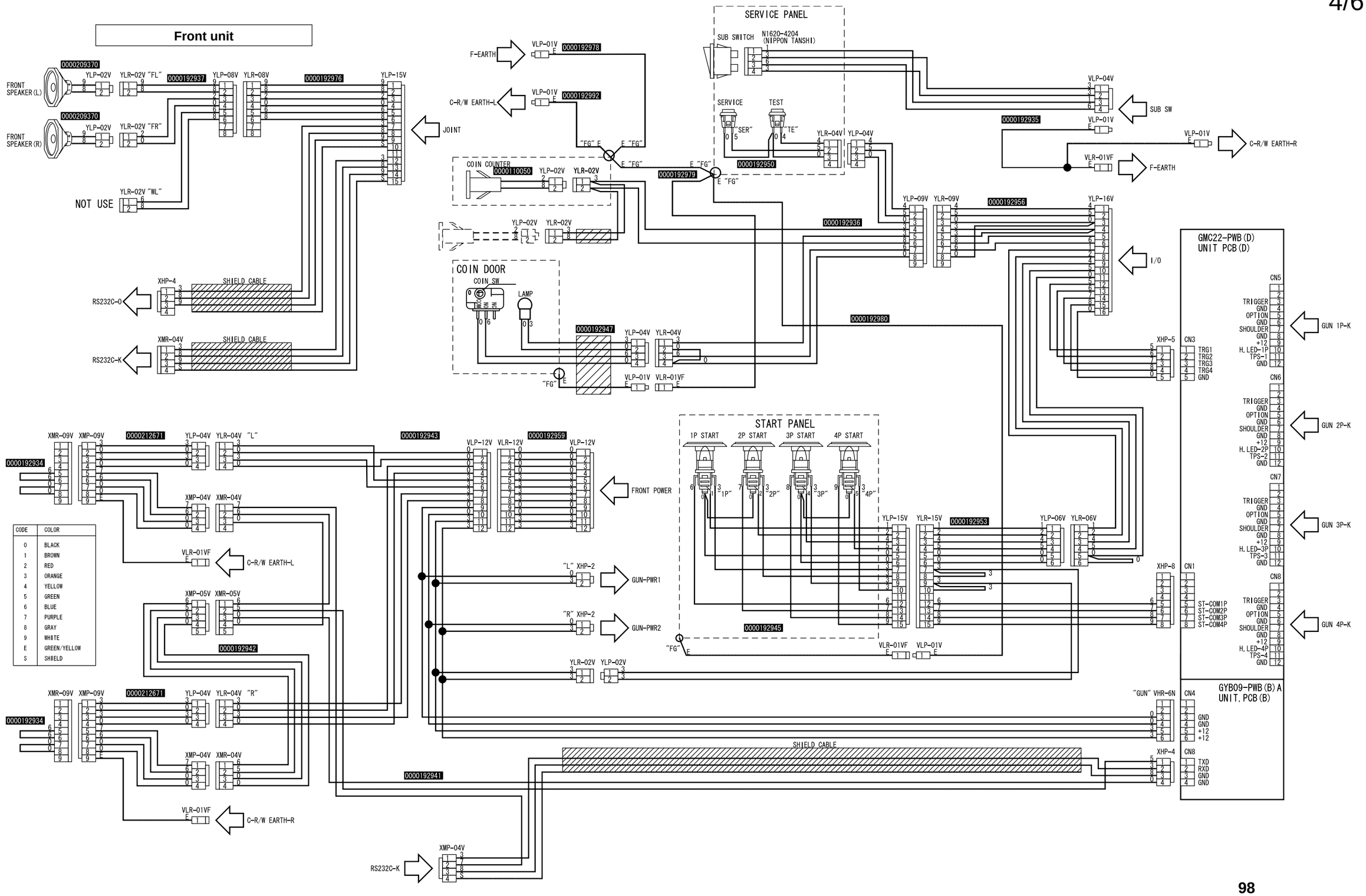
Front unit
FRONT SPEAKER (L)
FRONT SPEAKER (R)
NOT USE
JOINT
SERVICE PANEL
SUB SWITCH
N1620-4204 (NIPPON TANSHI)
SERVICE
TEST
SUB SW
C-R/W EARTH-R
F-EARTH
C-R/W EARTH-L
COIN COUNTER
COIN DOOR
COIN SW
LAMP
RS232C-0
RS232C-K
SHIELD CABLE
I/O
GMC22-PWB(D)
UNIT PCB(D)
GUN 1P-K
GUN 2P-K
GUN 3P-K
GUN 4P-K
START PANEL
1P START
2P START
3P START
4P START
FRONT POWER
GUN-PWR1
GUN-PWR2
GYB09-PWB(B)A
UNIT, PCB(B)
ST-COM1P
ST-COM2P
ST-COM3P
ST-COM4P
TRIGGER
OPTION
SHOULDER
H.LED-1P
H.LED-2P
H.LED-3P
H.LED-4P
TPS-1
TPS-2
TPS-3
TPS-4
TRG1
TRG2
TRG3
TRG4
TXD
RXD
CODE COLOR
0 BLACK
1 BROWN
2 RED
3 ORANGE
4 YELLOW
5 GREEN
6 BLUE
7 PURPLE
8 GRAY
9 WHITE
E GREEN/YELLOW
S SHIELD

5/6

Gun units

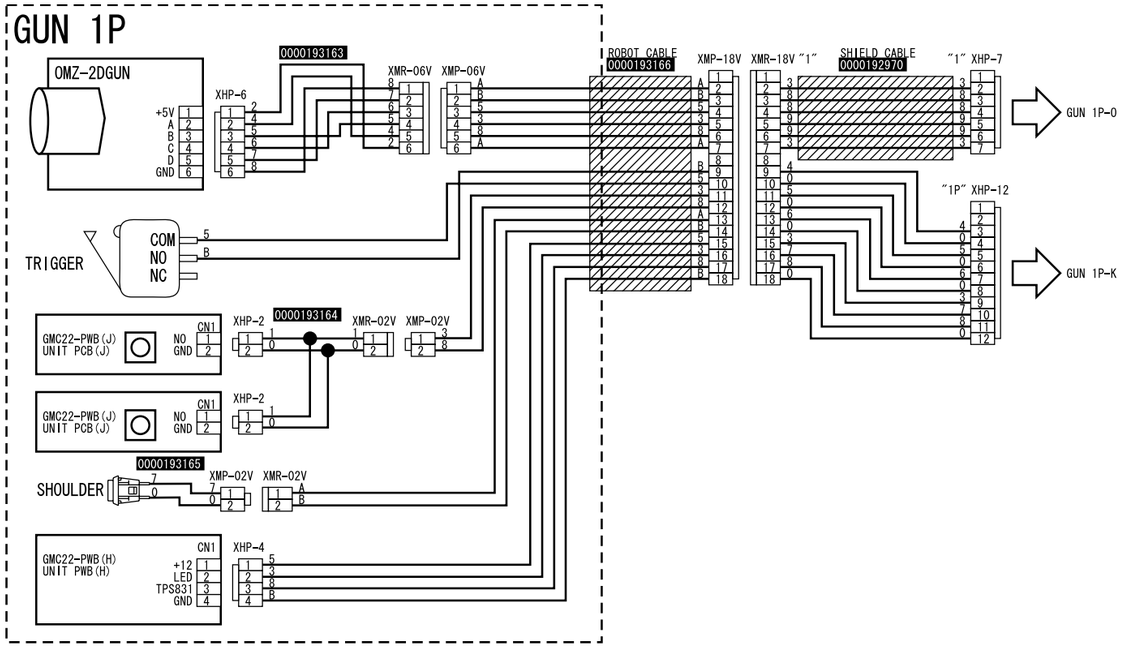

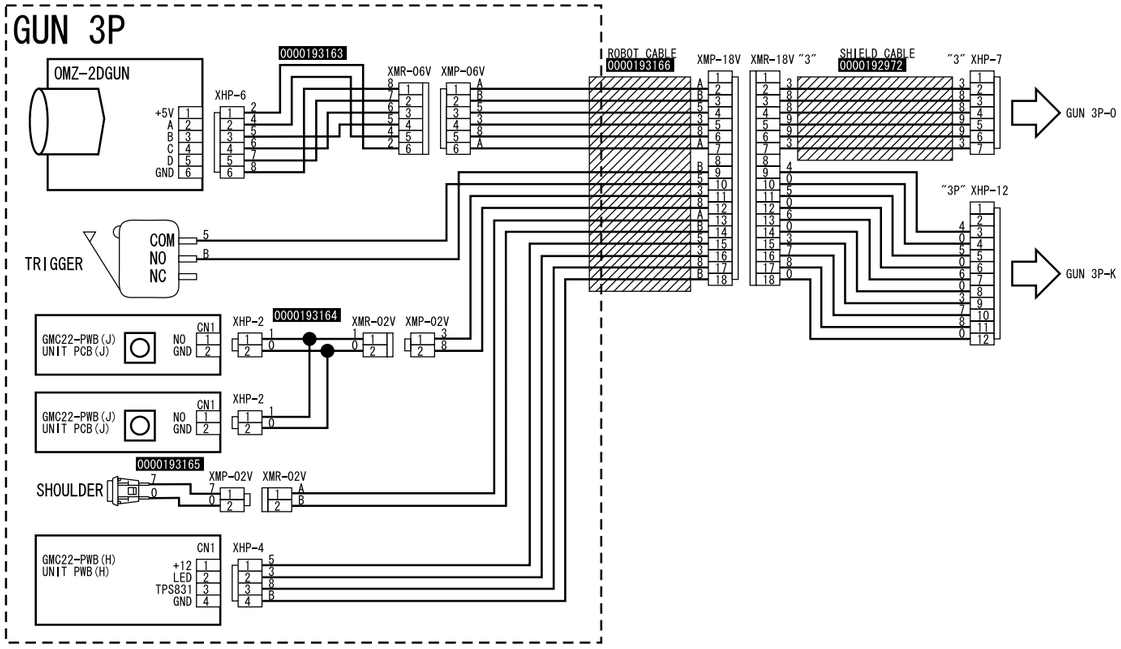

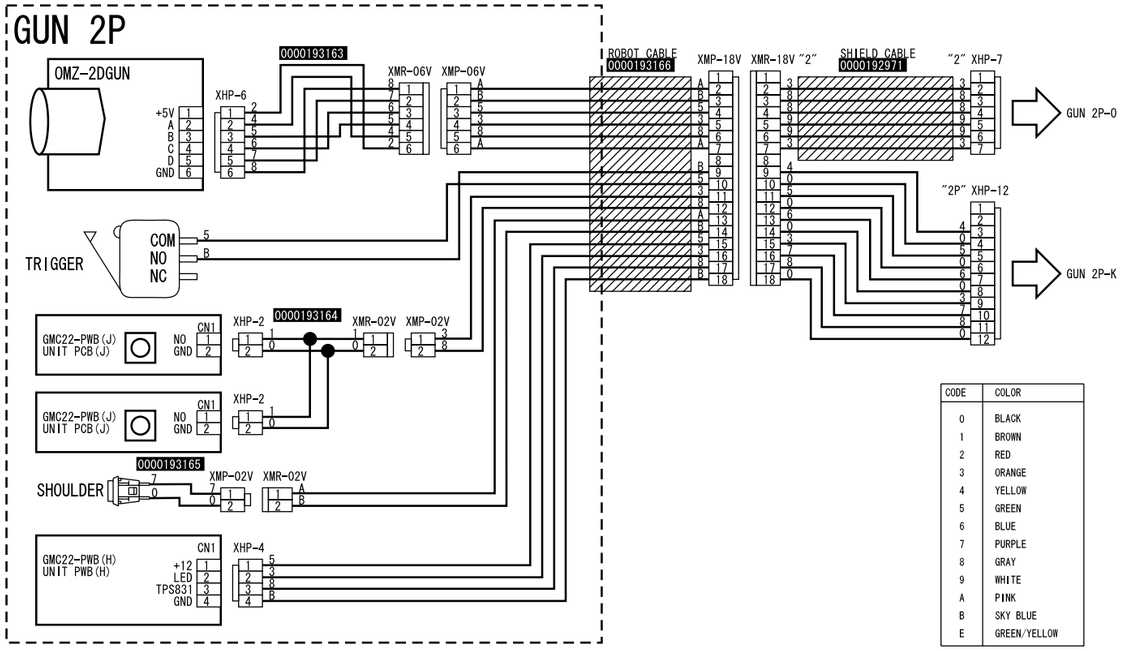

CODE	COLOR
0	BLACK
1	BROWN
2	RED
3	ORANGE
4	YELLOW
5	GREEN
6	BLUE
7	PURPLE
8	GRAY
9	WHITE
A	PINK
B	SKY BLUE
E	GREEN/YELLOW

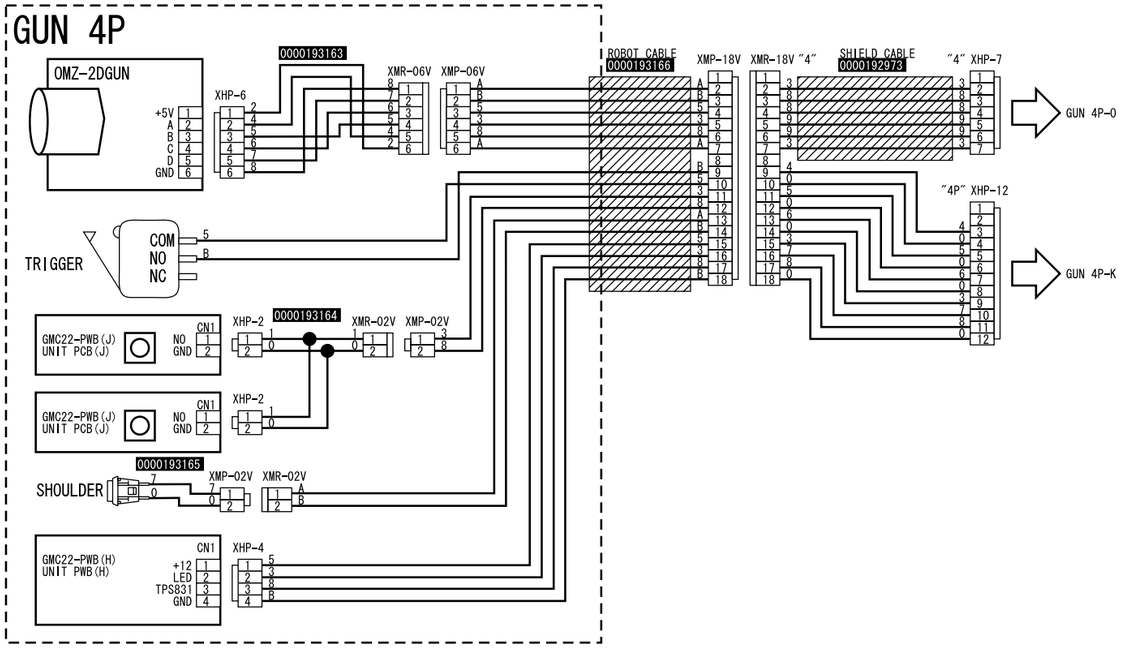

6/6

Sensor units

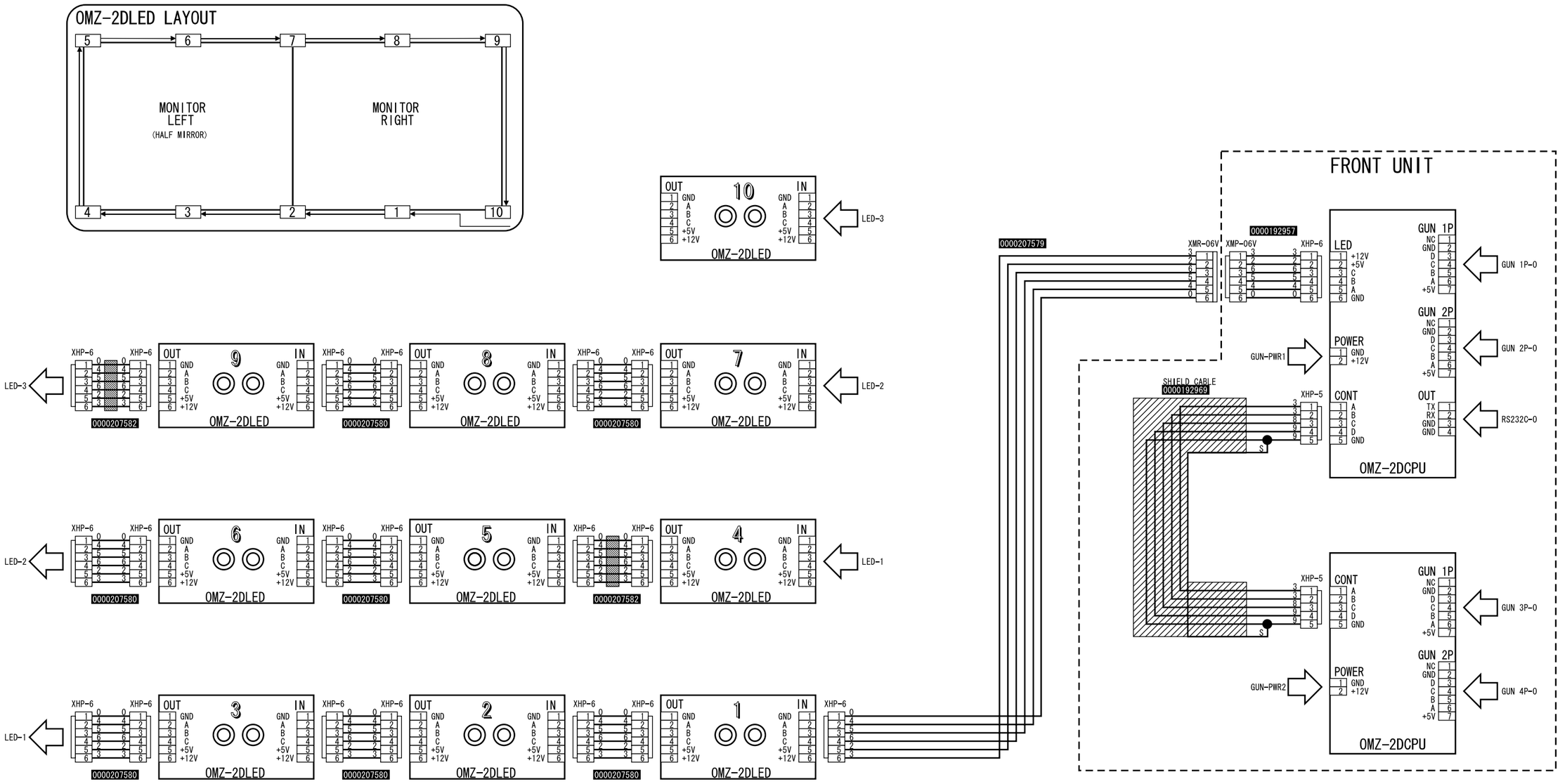

CODE	COLOR
0	BLACK
1	BROWN
2	RED
3	ORANGE
4	YELLOW
5	GREEN
6	BLUE
7	PURPLE
8	GRAY
9	WHITE
S	SHIELD
E	GREEN/YELLOW

KONAMI®

2nd printing 2002.12