19" COLOR MONITOR SCHEMATIC DIAGRAM

MODELS 19K4625, 19K4626, 19K4675, 19K4676

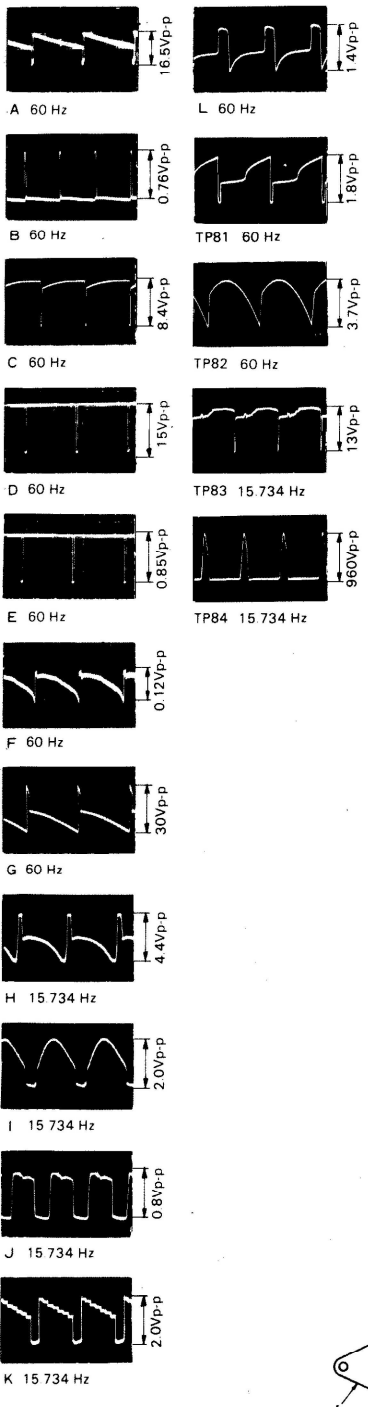

Power Supply Voltage and Symbols

Symbols	Line Voltage	Working Circuit
■	15V	Vert. — Drive stage ABL — Bias CRT Cut-Off
◓	30V	Vert. Output Side pin Trans. — Bias
⊗	127V	Horiz. Osc. Horiz. Drive Horiz. Output
⊙	160V	Video Output
⬢	890V	Screen-Bias

★

SERVICE TECHNICIAN WARNING
X-RAY RADIATION PRECAUTION:

THIS PRODUCT CONTAINS CRITICAL ELECTRICAL AND MECHANICAL PARTS ESSENTIAL FOR X-RAY RADIATION PROTECTION.
FOR REPLACEMENT PURPOSES, USE ONLY TYPE PARTS SHOWN IN THE PARTS LIST.

⚠

CAUTION: FOR CONTINUED SAFETY, REPLACE SAFETY CRITICAL COMPONENTS ONLY WITH MANUFACTURER'S RECOMMENDED PARTS.
AVERTISSEMENT: POUR MAINTENIR LE DEGRE DE SECURITE DE L'APPAREIL NE REMPLACER LES COMPOSANTS DONT LE FONCTIONNEMENT EST CRITIQUE POUR LA SECURITE QUE PAR DES PIECES RECOMMANDEES PAR LE FABRICANT.

OSCILLOSCOPE WAVEFORM PATTERN

The waveforms shown are as observed on the wide band oscilloscope with the monitor turned to a reasonably strong signal and a normal picture. The voltages shown on each waveform are the approximate peak amplitudes. The frequency accompanying each waveform indicates the repetition rate of waveform not the sweep rate of the oscilloscope.
If the waveforms are observed on the oscilloscope with a poor high frequency response, the corner of the pulses will tend to be more rounded than those shown and the amplitude of any high frequency pulse will tend to be less.

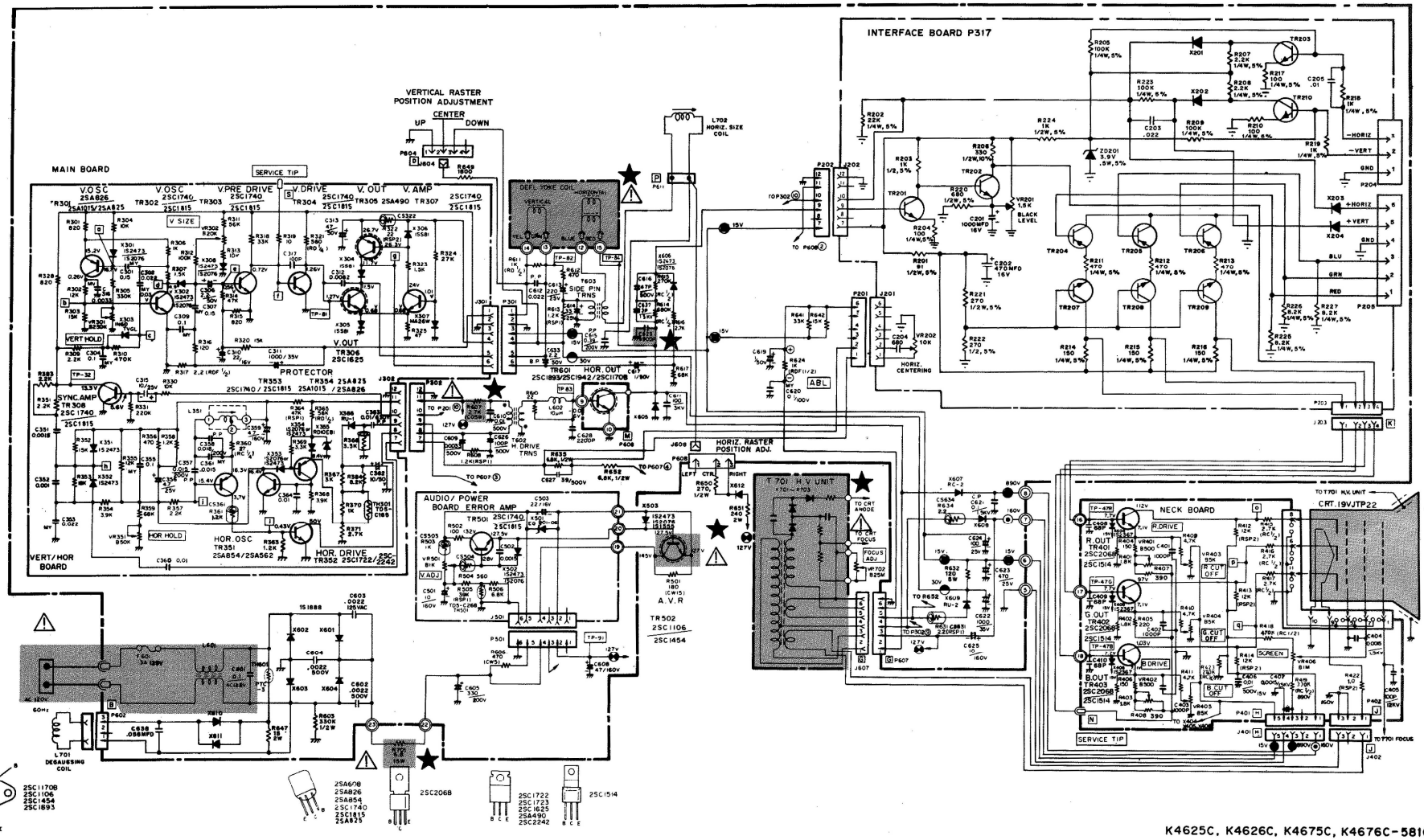

K4625C, K4626C, K4675C, K4676C-5816