CAPCOM CLASSIC

BreakShot 9™

PARTS: (847) 797-6320
SERVICE: (847) 797-6192
FAX: (847) 797-6306

OPERATORS MANUAL
PM00147
ISSUE DATE: 05/02/96

COPYRIGHT© 1996
CAPCOM® COIN-OP, INC.

CAPCOM
COIN-OP, INC.

GAME SPECIFICATIONS

CHARACTERISTIC	DESCRIPTION
ELECTRICAL INPUT RATINGS	100 to 115V AC 50/60HZ 8 AMPS 200 to 230V AC 50/60HZ 4 AMPS
CIRCUIT PROTECTION	Slow-Blo fuses, Varistor Surge Protection, IEC-Type Grounded Receptacle
SHIPPING CARTON INFORMATION	Height: 55-1/2"(1.41M) Width: 30-1/2"(0.77M) Depth: 30-1/2"(0.77M) Weight: 240 Pounds (108.6Kg)
PRODUCT APPROVALS	FCC, Part 15, Class A Digital Device CE Marking
AUDIO SYSTEM	MPEG Digital 1 Channel Mono Output (Left, Center, Right) Rated at 10Watts RMS • Two 4" 2-way Speakers for Mid & High Frequencies • One 8" Bass Speaker for Low Frequencies
DISPLAY	128 X 32 Character Dot Matrix
COIN DOOR	Standard: 2 Coin Acceptors Optional: Additional 2 Coin Acceptor or Bill Acceptor
OPERATOR ADJUSTABLES	Audio: Volume Control for Sound Effects, Background Sounds, Attract Sounds Visual: Standard or Custom Display Messages Coinage: U. S. Standard; Custom Configuration for Foreign Currencies Play Mode: Free Play, Tournament, and Game Difficulty Level Game Play: Replay Percentage, Match Credits, Game Restart Password Protection: 3 Levels of Security
SPECIAL SOFTWARE FEATURES	•175 Individual Audits •11 Self-Test Modes •Adjustable Flipper Strength •6 Internal Diagnostic Levels •Automated Software Troubleshooting

CABINET DIMENSIONS

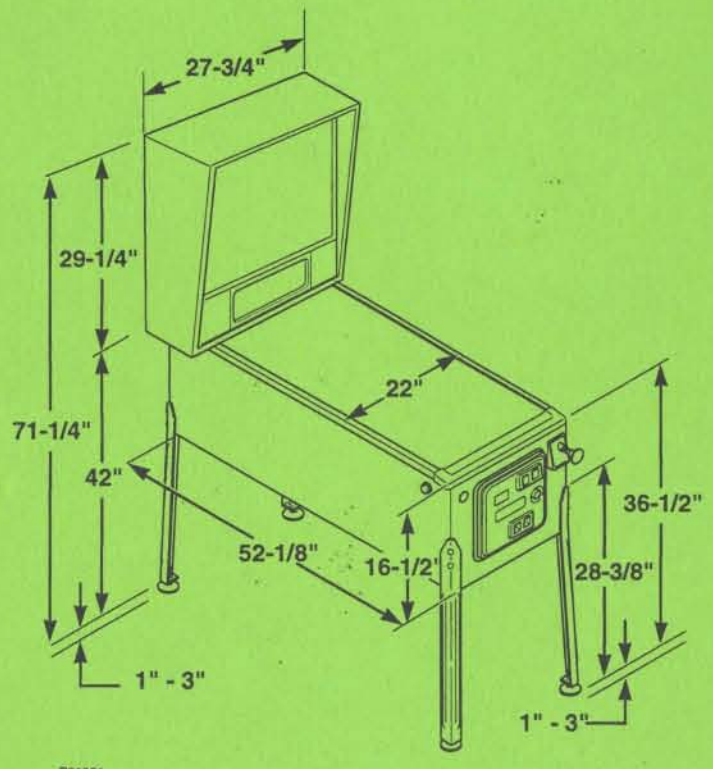

P61001

NOTE:

DIMENSIONS DO NOT INCLUDE CABINET PROTRUSIONS, SUCH AS THE BALL SHOOTER, COIN DOOR, FLIPPER BUTTONS, OR BACKBOX LATCH.

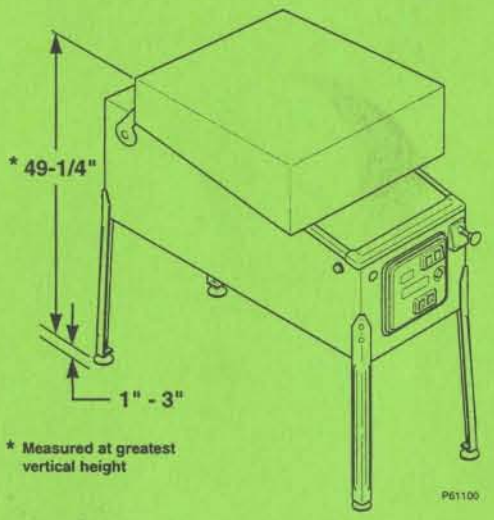

* Measured at greatest vertical height

P61100

Proprietary and confidential information, not to be disclosed or copied without the express permission of CAPCOM® COIN-OP, INC.

TABLE OF CONTENTS

DESCRIPTION PAGE

Installation & Setup 1

Game Rules 5

Menu System
- Menu System Description 18
- Audits Data Table 21
- Game Adjustments 24
- Game Diagnostics 33
- Reset Functions 41
- Reports 42
- Redemption 51

Component Parts Identification & Service Parts Listing
- Cabinet & Backbox Parts Identification 54
- Power Driver Board 56
- Sound Board 60
- CPU Board 62
- Display Power Supply Board 64
- Interface Board 65
- Diode Board 66
- Lamp Boards 68
- Cabinet, Backbox, & Playfield Lamps 70
- Playfield Rubber Rings 72
- Playfield Ball Guides 73
- Playfield Posts 74
- Switches and Optos 78
- Opto Boards 79
- Solenoids and Flashers 80
- Playfield Plastics 82
- Playfield - Mechanisms 85

Troubleshooting Guide
- Power-up Problems 104
- Coin Door Problems 105
- Dot Matrix Display Problems 106
- Sound Problems 107
- Playfield Problems - Mechanical 108
- Playfield Problems - Solenoids 109
- Playfield Problems - Switches 110
- Illumination Problems - Playfield & Backbox 111

Schematic Diagrams

Proprietary and confidential information, not to be disclosed or copied without the express permission of CAPCOM® COIN-OP, INC.

PACKING LIST

The following parts are included in the packing box of the game container. Some parts are required for assembly of the game while others are included as spare parts. If any part(s) are missing, contact your local Capcom® distributor.

ITEM	QTY	PART NUMBER
PINBALLS	3	BL00103
PLATE, LINE CORD BACKING	1	MT00325
LEVELERS, LEG	4	MS00101-1
NUT, LEG, LEVELERS, 3/8-16 X 3.0	8	NT00100-13
CORD, LINE	1	*SEE NOTE
CARD, BUSINESS REPLY	1	PM00117
SCREW, 8-13 X 1 MACHINE, CABINET	1	SC00101-08
BUSHING, CORD INSULATION, CABINET	1	PL00259-05
BOB, TILT MECH PLUMB, CABINET	1	MS00102
WIRE, PLUMB BOB HOOK, CABINET	1	MS00105
COVER, 3 SLOT CASH BOX, CABINET	1	A-00143-1
BOX, CASH, CABINET	1	PL00238
LEGS, PINBALL, CABINET	4	MT00231
SCREW, 3 / 8 - 16 X 3, THUMB, BACKBOX	2	SC00154-24
WASHER, FLAT # 3 / 8, BACKBOX	2	WS00100-12
WASHER, LOCK # 3 / 8, BACKBOX	2	WS00104-15
****BAG, SPARE PARTS**	**1**	**A-00486-PB6**

***NOTE:** There are several types of line cords available. If this item is missing, contact your Capcom® distributor with the model number of your game.

**INCLUDED IN THE SPARE PARTS BAG:

ITEM	QTY	PART NUMBER
PLASTIC, LEFT SLINGSHOT	1	AW00125-1
PLASTIC, RIGHT SLINGSHOT	1	AW00125-2
COIL, 23 800T	1	CL00109
COIL, 22 1100T	1	CL00111
DIODE, 1N4004	1	DI00100
FUSE, 3 AMP SLO-BLO	1	FS00100-03
FUSE, 4 AMP SLO-BLO	1	FS00100-04
FUSE, 5 AMP SLO-BLO	1	FS00100-05
FUSE, 7 AMP SLO-BLO	1	FS00100-07
FUSE, 8 AMP SLO-BLO	1	FS00100-08
FUSE, 10 AMP SLO-BLO	1	FS00100-10
TARGET, DROP WHITE	1	PL00325-W
LINK, FLIPPER PLUNGER	1	PL00202-1

Proprietary and confidential information, not to be disclosed or copied without the express permission of CAPCOM® COIN-OP, INC.

INSTALLATION INSTRUCTIONS

1) To open carton, remove staples and open top flaps (see Figure 1).

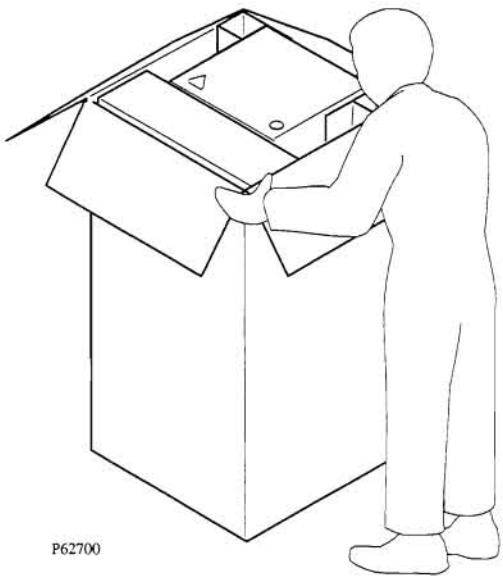

FIGURE 1: OPENING SHIPPING CARTON

2) Two or more people should lay the carton on its side. Slide game and packing materials out from carton (see Figure 2). Open the parts box.

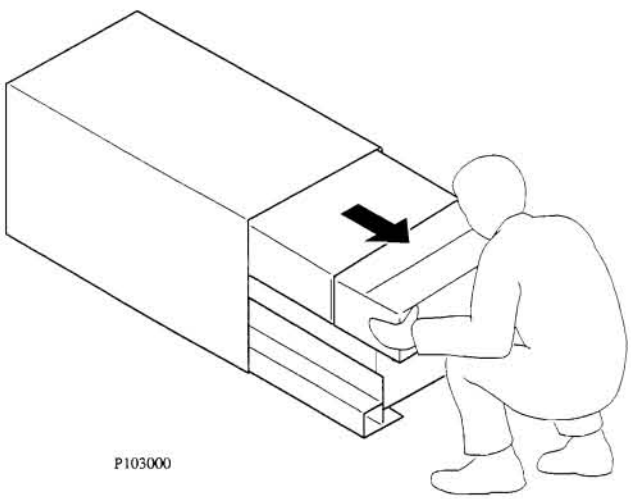

FIGURE 2: REMOVING GAME AND PARTS BOX

3) Check loose parts against packing list. Report any damaged or missing parts.

4) Keys are attached to the ball shooter. Open coin door and install cash box.

5) Raise the backbox to its upright position. Ensure that cables are not pinched (see Figure 3).

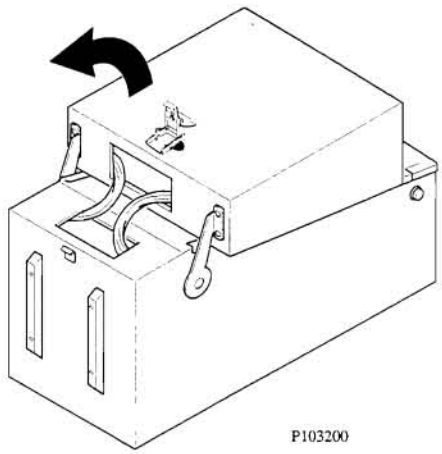

FIGURE 3: RAISING BACKBOX UPRIGHT

6) Lift the cabinet latch and flip key upwards to the upright position. Turn the key counter clockwise (to the left) (see Figure 4).

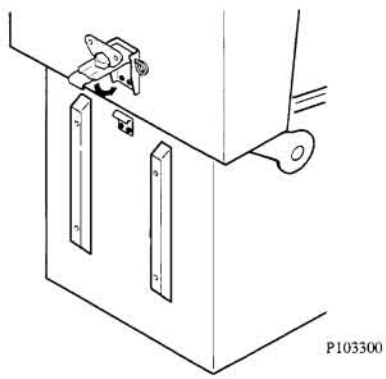

FIGURE 4: LATCH ON BACKBOX

7) Engage the latch and turn key fully clockwise (to the right). Flip the key down to lock (see Figure 5).

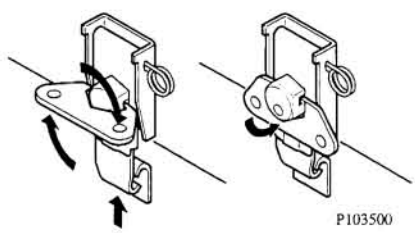

FIGURE 5: LOCKING THE LATCH

Proprietary and confidential information, not to be disclosed or copied without the express permission of CAPCOM® COIN-OP, INC.

8) Install one hex nut (A) half-way up on each leveler. Then insert levelers into each leg and turn until they contact the stop nut. Using a second nut (B), thread onto each leveler from inside the leg and tighten (see Figure 6).

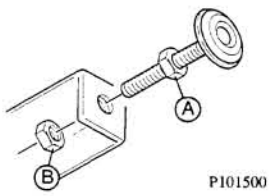

FIGURE 6: INSTALLING LEVELER ON LEG

9) Carefully lift the front of the cabinet and place on a sturdy support. Attach the front legs using two acorn-head bolts. Tighten bolts firmly (see Figure 7).

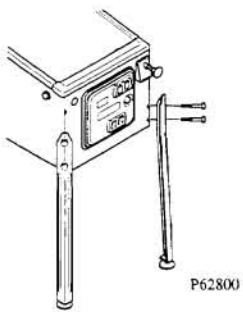

FIGURE 7: INSTALLING LEGS ON CABINET

10) Carefully lift the rear of the cabinet, place on a sturdy support, and attach the legs using the supplied bolts. Tighten firmly.

11) At the rear of the cabinet, connect AC line cord to receptacle. Install cover plate, bushing, and screws.

12) Using two or more people lift the game and move to intended play area. Do not slide legs on floor.

13) Insert key into the lock at the top of the backbox and turn fully clockwise. Lift up on backglass and swing out towards front of game. CAREFULLY remove backglass and set aside.

14) Lift up on latch and open the lamp door. Swing door completely open. Open display panel by pushing latches, located above the speaker enclosures, out towards the sides of backbox.

15) Attach lock washer and flat washer to thumb screw and fasten to cabinet tee nuts (see figure 8). Tighten firmly.

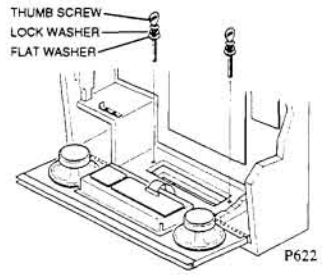

FIGURE 8: INSTALLING BACKBOX LOCKING HARDWARE

16) Check that all fuses, connectors, lamps, and wire harnesses are fully seated. Tighten any loose fasteners snugly. Do not overtighten.

17) Close and latch both sides of the display panel; then close and latch the lamp door. Re-install the backglass and lock the backbox.

18) Place a level in position "A" on the playfield glass (see Figure 9). Adjust the rear leg levelers, as required, to obtain zero degree(0°) balance. Move the level to position "B" and repeat front & rear adjustments until cabinet appears level. Move the level to position "C" and adjust front and/or rear leg levelers to obtain a 6-1/2° incline. Tighten leg leveler nuts firmly.

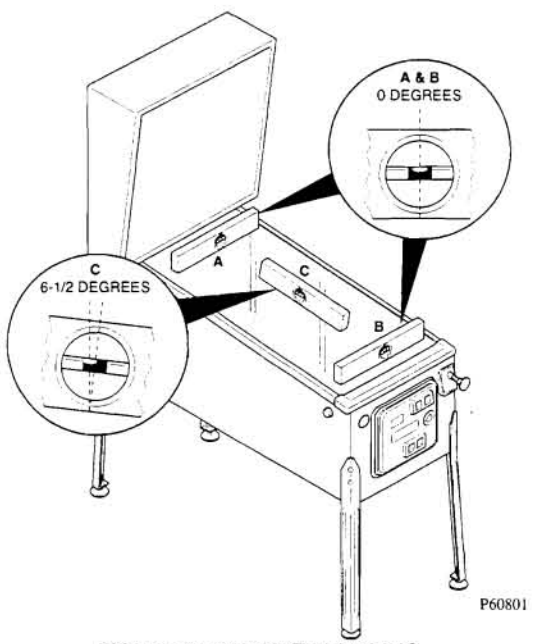

FIGURE 9: CABINET LEVELING

Proprietary and confidential information, not to be disclosed or copied without the express permission of CAPCOM® COIN-OP, INC.

19) Remove the handrail by opening the coin door and releasing the thumb latch (see Figure 10):

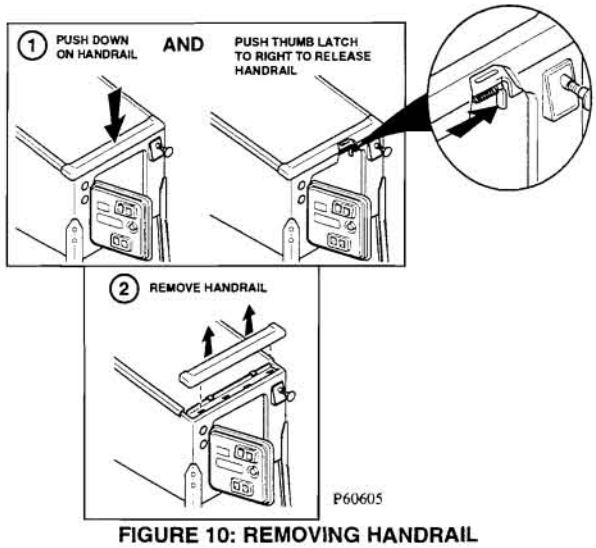

FIGURE 10: REMOVING HANDRAIL

20) Remove playfield glass by sliding down and out of armor guides. CAREFULLY set glass aside.

21) Push thumb latch to the right to release playfield. Lift playfield straight-up until it reaches the locked position. Verify that solenoids, connectors, lamps, and harnesses are fully seated. Tighten any loose fasteners snugly. Do not overtighten.

22) Locate plumb bob parts. Install thumbscrew into threaded hole on lead weight. Insert hook wire into tapered end of lead weight. Raise wire & weight up into bottom tilt bracket and hang from top bracket. Adjust and tighten screw firmly (see Figure 11).

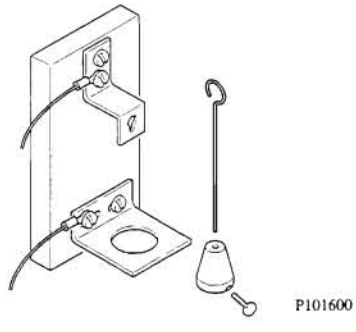

FIGURE 11: PLUMB BOB TILT ASSEMBLY

23) Lower the playfield into the cabinet. Ensure that cables are not pinched when playfield is seated.

24) Re-install the handrail by engaging the thumb latch to the right (see Figure 12).

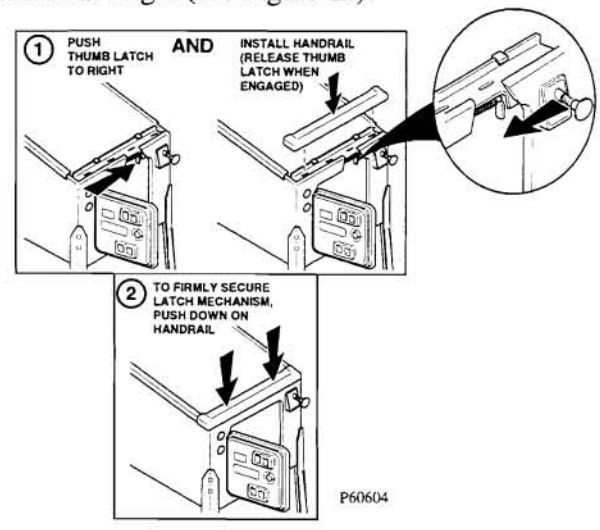

FIGURE 12: INSTALLING HANDRAIL

Make sure your game is locked. Press down on the handrail until you hear a click.

25) Connect AC line cord to power outlet. Route cord away from foot traffic. Turn the game power ON (switch is under cabinet near right front leg).

26) Open the coin door. Dot matrix display will show the system menu. Follow directions in this manual for changing factory settings.

27) Refer to the TROUBLESHOOTING GUIDE section of the manual for assistance in locating faults, clearing errors, etc.

28) Upon completion, system menu should report "FOUND: 0 ERRORS, 0 INFO" to indicate the game is ready for use.

29) Install required number of balls.

30) Close the coin door. Insert currency or tokens as necessary. Press the START button. Game should begin.

31) Clean both sides of playfield glass. Install glass. Install handrail. Ensure that lever snaps in and locks.

32) Open coin door and retrieve currency or tokens. Set custom messages, difficulty, pricing, replays, etc.

33) Reset all counters to zero. Close and lock coin door. Ensure that the backbox is locked.

Proprietary and confidential information, not to be disclosed or copied without the express permission of CAPCOM® COIN-OP, INC.

PLAYFIELD GAME FEATURES

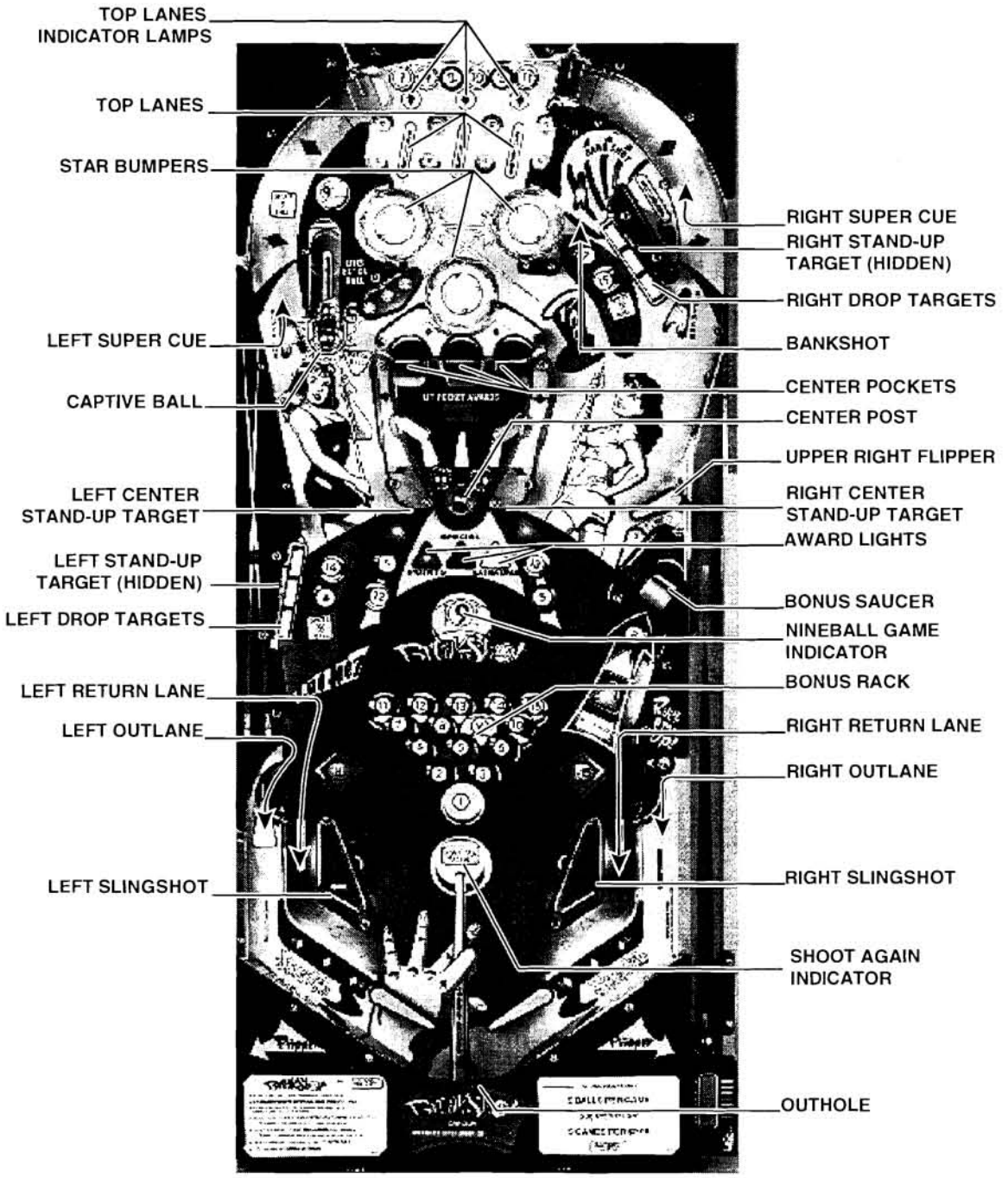

P6F00100

Proprietary and confidential information, not to be disclosed or copied without the express permission of CAPCOM® COIN-OP, INC.

GAME RULES

NOTE: Many of the Rules and Features of this game are operator adjustable (see *B2, Game Adjustments*, in the Menu System section of this manual). This allows for setting of various levels of player difficulty for the game (extra easy to extra hard).

Breakshot consists of three pool games: Eightball, Nineball, and Rotation and a bonus round of *Cutthroat Countdown*. These games require that the player hit certain targets, saucers, lanes, or orbits to advance through the progression of balls. Each game ball is represented on the playfield at various locations and has an indicator lamp that, when flashing, "spots" the ball. The player must then try to complete the shot and advance to the next ball.

Each game ball is also shown in the Bonus Rack. It consists of fifteen indicator lights arranged like a "rack" of pool balls. Each light represents the status of the current game by indicating which balls have been collected (lit) or not collected (unlit) and, during the Rotation game, indicates which ball is the next ball to play (flashing). A game ball is either lit at the target and unlit in the Bonus Rack (the ball is active, or "spotted") or unlit at the target and lit in the Bonus Rack (the shot has been completed).

The basic rules of each game are as follows:

- Eightball - Solids (① through ⑦) or Stripes (⑨ through ⑮) can be shot, *in any order*, by making the top lanes and hitting the standup targets (in the center of the playfield) and those behind the drop targets. After all Stripes or Solids balls have been collected, the eight ball is "spotted" at the right saucer. Making this shot wins the Eightball game.
- Nineball - ① through ⑨ must be shot, *in order*, by making the left Super Cue (orbit), the right Super Cue (orbit), the Captive Ball, and the standup targets behind the drop targets.
- Rotation - ① through ⑮ must be shot, *in order*, by making the top lanes and hitting the standup targets (in the center of the playfield) and those behind the drop targets.
- Cutthroat Countdown - After completing the above games, the player has a sixty-second opportunity to score 1,000,000 points for each consecutive ball (1 through 15) that can be collected. For each ball that is made, an additional 10 seconds is added to this round. If every ball is completed within the time limit, all locked balls are released and the player can collect an additional Jackpot award.

Note: *BREAKSHOT*™ starts with the Eightball game. Completing the Eightball game starts Nineball. Completing the Nineball game begins Rotation. Completing Rotation starts Cutthroat Countdown Nineball. Completing this starts Cutthroat Countdown Eightball, etc..

EIGHTBALL GAME

The Eightball game is indicated by the Eightball game light flashing. It flashes once for each time the Eightball game has been played during the current coin (including buy-ins).

When the Eightball game is started from power-up, the first game is Stripes. Each successive game will then alternate between Solids and Stripes. Completing the shot scores 30,000 points and adds 10,000

Proprietary and confidential information, not to be disclosed or copied without the express permission of CAPCOM® COIN-OP, INC.

points to the End-of-Ball bonus. Once all the Solids or Stripes balls have been collected, the eight ball is spotted. Making the eight ball shot wins the Eightball game and begins Nineball.

are located above the top lanes. Making the corresponding top lane, when one of these balls is flashing, collects that ball.

and are located at the left center standup target. and are located at the right center standup target. Hitting these standup targets collects these balls.

and are located at the left drop target bank. and are located at the right drop target bank. Initially, the ball indicator lamps are lit steady. Completing either drop targets will "spot" the ball, causing the appropriate ball lamp to flash. Hitting the standup target behind the drop target collects the indicated ball.

The is located at the Bonus Saucer on the right side of the playfield. The eight-ball is qualified ("spotted") after all Solids or Stripes have been collected. Shooting the bonus saucer collects the eightball, winning the Eightball game and begins Nineball.

In addition to the shots mentioned above, balls can be collected by repeatedly shooting the bankshot orbit (see *Bankshot Orbit*), by shooting the Left and Right Super Cue (orbits) (see *Left Super Cue* and *Right Super Cue*), and shooting the center pockets saucers (see *Center Pockets*).

NINEBALL GAME

The Nineball game is indicated by the Nineball game light flashing. It flashes once for each time the Nineball game has been played during the current coin (including buy-ins).

When the Nineball game is started, the flashes in the bonus rack. through must be collected, *in order*, to win the Nineball game and begin Rotation (if the previous game was Eightball) or Eightball (if the previous game was Rotation). When a ball is collected, it is lit in the bonus rack and the next ball will be spotted (flashing) in the bonus rack. Collecting a ball scores 30,000 points and adds 10,000 points to the End-of-Ball bonus.

During the Nineball game, both the left and right Super Cues (orbits) are lit. Shooting the left Super Cue lane either directly, or by completing a right Super Cue (which feeds around to the left Super Cue lane), spots a ball. The "Spots Next Ball" light will be flashing in the left Super Cue lane to indicate that the Super Cues are spotting the ball.

Shooting the Captive Ball standup target spots one ball (see *Captive Ball*). Balls can also be collected by repeatedly shooting the Bankshot orbit (see *Bankshot*) or by shooting the Center Pockets saucers (see *Center Pockets*).

The current Nineball award is indicated by a flashing SPECIAL, POINTS, or EXTRA BALL light in the center of the playfield. The first time the Nineball game is played, EXTRA-BALL and POINTS alternate. Each sucessive Nineball game will then alternate between SPECIAL, EXTRA BALL, and

Proprietary and confidential information, not to be disclosed or copied without the express permission of CAPCOM® COIN-OP, INC.

POINTS (except in cases where the ball has been inactive for more than 7 seconds, the award will remain on POINTS).

ROTATION GAME

The Rotation game is indicated by the Rotation game light flashing. It flashes once for each time the Rotation game has been during the current coin (including buy-ins).

When the Rotation game is started, the ① flashes in the bonus rack. ① through ⑨ must be collected, *in order*, to win the Rotation game and begin Nineball. When a ball is collected, it is lit in the bonus rack and unlit at the target. The next ball in sequence is then spotted (flashing) at its' target. Collecting a ball scores 30,000 points and adds 10,000 points to the End-of-Ball bonus.

① ② ③ ⑨ ⑩ ⑪ are located above the Top Lanes. Making the corresponding top lane, when one of these balls is flashing, collects that ball.

④ and ⑫ are located at the left center standup target. ⑤ and ⑬ are located at the right center standup target. Hitting these standup targets, when one of these balls is flashing, collects the ball.

⑥ and ⑭ are located at the left drop target. ⑦ and ⑮ are located at the right drop target. . Initially, the ball indicator lamps are lit steady. Completing either drop targets will "spot" the ball, causing the appropriate ball lamp to flash. Hitting the standup target behind the drop target collects the indicated ball.

The ⑧ is located at the Bonus Saucer. Shooting the Bonus Saucer, when the eight ball is "spotted" (flashing), collects the eight ball.

In addition to the shots mentioned above, balls can be collected by repeatedly shooting the bankshot orbit (see *Bankshot Orbit*), by shooting the Left and Right Super Cue (orbits) (see *Left Super Cue* and *Right Super Cue*), and shooting the center pockets saucers (see *Center Pockets*).

PLAYFIELD FEATURES

LEFT SLINGSHOT

The left slingshot scores 1000 points and 10 points alternately.

LEFT RETURN LANE

The left return lane scores 3000 points. The left return lane also lights the CALL YOUR SHOT feature at the Bonus Saucer for 6 seconds (see *Bonus Saucer*).

Proprietary and confidential information, not to be disclosed or copied without the express permission of CAPCOM® COIN-OP, INC.

LEFT OUTLANE

The left drain lane is a scratch (30,000 points). A ball return kicker is available to kick the ball back-out to the playfield and thus avoid the drain. It is lit by knocking down either of the three bank drop targets in sequence (left-to-right or right-to-left). Kicker awards can be stacked (operator adjustable). There is an indicator lamp above the kicker that is lit whenever the kicker is available.

LEFT DROP TARGETS

The left three bank drop target contains a hidden standup target. Dropping an individual target awards 3000 points. When all three targets have been dropped, the standup target becomes active and one of the following actions occurs:

- SPOT - During the Eightball (*Solids*) game, the six ball is spotted IF it has not been previously collected. The six ball is also spotted during the Rotation game IF it is the next ball to play. Hitting the standup target and collecting the six ball awards 30,000 points plus 10,000 points is added to the End-of-Ball bonus.
- SPOT - During the Eightball (*Solids*) game, the fourteen ball is spotted IF it has not been previously collected. The fourteen ball is also spotted during the Rotation game IF it is the next ball to play. Hitting the standup target and collecting the fourteen ball awards 30,000 points plus 10,000 points is added to the End-of-Ball bonus.
- 1000 POINTS - During the Eightball (*Solids* or *Stripes*) and Rotation games, the standup target awards 1000 points if the above spotted balls were previously collected.
- SPOT NEXT BALL - During the Nineball game, the standup target spots the next ball. Hitting the standup target completes the shot and awards 30,000 points plus 10,000 points are added to the End-of-Ball bonus.

Hitting the standup target always resets the drop target. Dropping the three drop targets in order (left-to-right or right-to-left awards one additional kickback to the left drain lane kicker (see *Left Drain Lane*).

LEFT CENTER STANDUP TARGET

The left center standup target awards 3000 points and spots the following balls:

- SPOT - During the Eightball (Solids) game, the left center standup target will spot the four ball IF the ball has not been previously collected. The standup target will also spot the four ball during the Rotation game IF it is the next ball to spot. Hitting the target collects the ball and awards 30,000 points plus adds 10,000 points to the End-of-Ball bonus.
- SPOT - During the Eightball (Stripes) game, the left center standup target will spot the twelve ball if the ball has not been previously collected. The standup target will also spot the twelve ball during the Rotation game if it is the next ball to spot.. Hitting the target completes

Proprietary and confidential information, not to be disclosed or copied without the express permission of CAPCOM® COIN-OP, INC.

the shot, collects the ball, and awards 30,000 points plus adds 10,000 points to the End-of-Ball bonus.

- LITE SUPER CUE - During the Eightball and Rotation games, hitting the left center standup target will light the right Super Cue (orbit) (see *Right Super Cue*). When the Lite Super Cue award is available, the Lites Super Cue light will flash.

CAPTIVE BALL

The Captive Ball awards 3000 points, when hit lightly, and 30,000 points when hit hard (the standup target is hit). A hard hit will also advance the game towards an extra ball, depending upon the number of hits required (software adjustable). The number of captive ball hits is indicated by three indicator lights to the right of the captive ball. When all three are lit, the extra ball is qualified and the extra ball indicator light will flash. Hitting the captive ball standup target one more time will award the extra ball and reset the captive ball indicator light. The number of captive ball standup hits for the next extra ball will then increase by one.

The Extra Ball can also be qualified by making a Super Cue Capcombo. A Super Cue Capcombo is made by completing a right Super Cue immediately after completing a left Super Cue or vice-versa. Completing a Super Cue Capcombo qualifies the Extra Ball at the Captive Ball for the duration of the ball in play (see *Left Super Cue* and *Right Super Cue*). When the Super Cue Capcombo extra ball is qualified, hitting the captive ball standup target will award the extra ball.

LEFT SUPER CUE

The left Super Cue (orbit) is lit during the Eightball and Rotation games by hitting the right center standup target (see *Right Center Standup Target*). Upon completion of a left Super Cue,it remains lit until another target is hit (allowing consecutive left Super Cue shots to be made). Once unlit, the left Super Cue can be re-lit by hitting the right center standup target.

The Left Super Cue is lit for the entire Nineball game. The Super Cue light will flash whenever the Left Super Cue is available. A hard shot to the Left Super Cue lane can travel through to the right Super Cue Lane, thus completing the orbit and awarding one of the following:

- INCREASE BANKSHOT BONUS - Completing the left Super Cue doubles the current Bankshot Bonus. By immediately shooting the Bankshot lane (see *Bankshot*), the Bonus can be collected. The Bonus starts at 50,000 and doubles for each left Super Cue completed (up to six times for a maximum of 3,200,000 points). The Bankshot Bonus resets at the start of each ball (operator adjustable).
- SUPER CUE AWARD - Completing the left Super Cue awards a Super Cue value of 30,000 points. This value will increase by 30,000 points for each consecutive left Super Cue completed (without hitting any other targets in-between).
- SUPER CUE CAPCOMBO- Completing the left Super Cue immediately after completing a right Super Cue (see *Right Super Cue*) completes the Super Cue Capcombo. It awards 250,000 points and lights the Extra Ball for the duration of the ball in play.
- SPOT BALL(S) - During Eightball, Nineball, and Rotation, completing the left Super Cue spots the next ball. Additionally, during Eightball or Rotation, the next *two* balls can be spotted if the right Super Cue is lit.

Proprietary and confidential information, not to be disclosed or copied without the express permission of CAPCOM® COIN-OP, INC.

TOP LANES

There are three ball lanes (left, center, right) at the top of the playfield. Making each lane will light its' diamond indicator, score 1000 points, and spot the next ball. Making all three lanes will increase the End-of-Ball bonus multiplier from 1 to 99. The order in which balls are spoted by the top lanes can be changed by shifting the diamonds left (by pressing the left flipper button) or right (by pressing the right flipper button).

- LEFT TOP LANE - During the Eightball (*Solids*) game, the left top lane will spot the one ball. During the Eightball (*Stripes*) game, the nine ball is spotted. During the Rotation game, either ball will be spotted.
- CENTER TOP LANE - During the Eightball (*Solids*) game, the center top lane will spot the two ball. During the Eightball (*Stripes*) game, the ten ball is spotted. During the Rotation game, either ball will be spotted.
- RIGHT TOP LANE - During the Eightball (*Solids*) game, the right top lane will spot the three ball. During the Eightball (*Stripes*) game, the eleven ball will be spotted. During the Rotation game, the right top lane will spot either ball.

STAR BUMPERS

The star bumpers score 1000 points and 10 points alternately.

RIGHT SUPER CUE

The right Super Cue (orbit) is lit during the Eightball and Rotation games by hitting the left center standup target (see *Left Center Standup Target*). Upon completion of a right Super Cue during an Eightball or Rotation game, it remains active (lit) until another target is hit (allowing consecutive right Super Cue shots to be made). It can be re-activated by hitting the left center standup target again. The right Super Cue is also active (lit) during the entire Nineball game. The Super Cue arrow light, at the entrance to the right Super Cue lane, flashes whenever the right Super Cue is available. A hard shot to the right Super Cue lane can travel through to the left Super Cue lane, thus completing the orbit and awarding one of the following:

- SUPER CUE AWARD - Completing the right Super Cue awards a Super Cue value of 30,000 points. This value will increase by 30,000 points for each consecutive right Super Cue completed (without hitting any other targets in-between).
- SUPER CUE CAPCOMBO - Completing the right Super Cue immediately after completing a left Super Cue (see *Left Super Cue*) completes a Super Cue Capcombo. It awards 250,000 points and lights the Extra Ball for the duration of the ball in play.
- SPOT BALL(S) - During Eightball, Nineball, and Rotation, completing the left Super Cue spots the next ball. Additionally, during Eightball or Rotation, the next *two* balls can be spotted if the left Super Cue is lit.

Proprietary and confidential information, not to be disclosed or copied without the express permission of CAPCOM® COIN-OP, INC.

BANKSHOT

The Bankshot (mini-orbit) lane is located at the upper right of the playfield. The upper right flipper can be used to repeatedly make the Bankshot lane (see *Upper Right Flipper*). The Bankshot lane can award the following:

- COLLECT BANKSHOT BONUS - If the Bankshot lane is made immediately after completing a left Super Cue (without hitting any other targets in-between), a Bankshot Bonus of 50,00 points is collected. It will double for each left Super Cue completed, up to a maximum of 3,200,000 points. The Bankshot Bonus resets at the start of each ball (operator adjustable).
- COLLECT BANKSHOT AWARD - The first time the Bankshot lane is made, 10,000 points are collected and the Bankshot lane is lit for consecutive Bankshots. The next consecutive Bankshot (made without hitting any other targets, with the exception of the upper right drop target and its' standup target) scores 100,000 points. Each consecutive Bankshot thereafter increases the point value by 100,000 points (200,000 points, 300,000 points, etc.).
- SPOT BALLS - Each lit bankshot that is made (i.e. the second consecutive Bankshot etc.) spots one ball.
    - BANKSHOT SKILL SHOT - When a ball is initially shot from the plunger, the Bankshot lane is lit for six seconds. If the Bankshot skill shot is completed during this time and and no other targets have been hit, 100,000 points are awarded.

RIGHT DROP TARGETS

The right three bank drop target contains a hidden standup target. Dropping an individual target awards 3000 points. When all three targets have been dropped, the standup target becomes active. After hitting the standup target, one of the following actions will occur:

- SPOT ⑦ - During the Eightball (*Solids*) game, the standup target will spot the seven ball if it has not been previously collected. The seven ball will also be spotted during the Rotation game if it is the next ball to play. Hitting the standup target collects the seven ball and awards 30,000 points plus 10,000 points is added to the End-of-Ball bonus.
- SPOT ⑮ - During the Eightball (*Solids*) game, the standup target will spot the fifteen ball if it has not been previously collected. The fifteen ball will also be spotted during the Rotation game if it is the next ball to play. Hitting the standup target collects the fifteen ball and awards 30,000 points plus 10,000 points is added to the End-of-Ball bonus.
- 1000 POINTS - During the Eightball(*Solids* or *Stripes*) and Rotation games, the standup target awards 1000 points if the above balls were previously collected.
- SPOT NEXT BALL - During the Nineball game, the next ball to play is spotted. Hitting the standup target collects the ball and awards 30,000 points plus 10,000 points are added to the End-of-Ball bonus.

Hitting the standup target always resets the drop target. Dropping the three drop targets in order (left-to-right or right-to-left awards one additional kickback to the left drain lane kicker (see *Left Drain Lane*).

Proprietary and confidential information, not to be disclosed or copied without the express permission of CAPCOM® COIN-OP, INC.

UPPER RIGHT FLIPPER

The upper right flipper provides clean shots to the Bankshot lane, the right Drop Target bank, the right Super Cue, and the Star bumpers.

RIGHT CENTER STANDUP TARGET

Hitting the right center standup target (located to the right of the center post) will award 3000 points and one of the following will occur:

- SPOT (5) - During an Eightball (*Solids*) game, the standup target will spot the five ball if it has not been previously collected. The five ball will also be spotted during the Rotation game if it is the next ball to play. Hitting the target will collect the five ball and award 30,000 points plus 10,000 points is added to the End-of-Ball bonus.
- SPOT (13) - During an Eightball (*Stripes*) game, the standup target will spot the thirteen ball if it has not been previously collected. The thirteen ball will also be spotted during the Rotation game if it is the next ball to play. Hitting the target will collect the thirteen ball and award 30,000 points plus 10,000 points are added to the End-of-Ball bonus.
- LITE SUPER CUE - During the Eightball and Rotation games, hitting the standup target will light the left Super Cue (see *Left Super Cue*). When the Lite Super Cue award is available, the Lites Super Cue light will flash.

BONUS SAUCER

The Bonus Saucer is located on the right side of the playfield. The Bonus Saucer is used for a variety of features:

- SPOT (8) - During an Eightball (*Stripes* or *Solids*) game, the Bonus Saucer will spot the eight ball if all other game balls have been collected. The eight ball is also spotted during the Rotation game if it is the next ball to play. Making the Bonus Saucer shot collects the eight ball and awards 30,000 points plus 10,000 points is added to the End-of-Ball bonus.
- COLLECT BONUS - The Collect Bonus feature is active (flashing) at the start of each ball if the current game in progress has collected at least one ball. Making the Bonus Saucer collects the End-of-Ball bonus without resetting it. The End-of-Ball bonus awards a base value of 10,000 points plus 10,000 points for each ball collected during the current game. These points are then multiplied by the current bonus multiplier (from 1 to 99; see *Top Lanes*). The bonus multiplier then resets to one for the start of each ball. Once the bonus has been collected, it is not available again until completion of the current game or at the start of the next ball.
- CALL YOUR SHOT - The Call Your Shot feature is qualified (flashing) by the left return lane (see *Left Return Lane*) for six seconds. It is also qualified during Eightball and Rotation games when the eight ball is spotted at the Bonus Saucer. Completing the Bonus Saucer allows you to choose one of three shots (Left Super Cue, Center Pocket saucers, or Right Super Cue) by

Proprietary and confidential information, not to be disclosed or copied without the express permission of CAPCOM® COIN-OP, INC.

pressing either flipper button. The locked ball is then ejected from the Bonus Saucer and, if the next shot is made within 7 seconds and it is the called shot (i.e. no other targets are hit), all balls remaining in the current pool game are collected and awarded 30,000 points each. Additionally, 10,000 points are added per ball to the End-of-Ball bonus. The next game begins.

- BALL-O-RAMA - Ball-O-Rama (2 Ball Mayhem) is available (flashing) whenever a ball is locked in either the left or right Center Pockets saucer (see *Center Pockets*) and *Call Your Shot* is inactive. Shooting the Bonus Saucer starts Ball-O-Rama and lasts until one of the two balls drains. During Ball-O-Rama, game scoring is augmented as follows:
  - PLAYFIELD SCORES x 2 - All playfield targets score two times their normal value;
  - BALL-O-RAMA BONUS - During Ball-O-Rama, a special bonus is available. The Ball-O-Rama bonus starts at 100,000 points and increases by 10,000 points for each second that Ball-O-Rama is active (i.e. two balls in play). Note: If no targets are hit for five seconds, the Ball-O-Rama bonus stops increasing until another target is hit. This prevents players from holding the balls on the flippers while the Ball-O-Rama bonus keeps increasing. Shooting the Bonus Saucer during Ball-O-Rama awards the current Ball-O-Rama bonus. The Ball-O-Rama bonus continues to build from its current value after it is collected.

RIGHT SLINGSHOT

The right slingshot scores 1000 points and 10 points alternately.

RIGHT OUTLANE

The right drain lane is a scratch (30,000 points).

RIGHT RETURN LANE

The right return lane scores 3000 points.

CENTER POCKETS

The Center Pockets consists of three eject saucers with an entrance through the center post. When lowered, this post is flush with the playfield, allowing access to the saucers. When raised, the post blocks the entrance to the saucers and the ball(s) contained in the pocket area come to rest against the post. When hitting the center post with the current ball in play, the captured ball(s) can then enter the saucers.

The Center Pockets is also used to lock balls for Ball-O-Rama (2-Ball Mayhem) and Breakshot Frenzy (3-Ball Mayhem). It can also award points, an Extra Ball or Special during the Nineball Game, as well as spotting balls in the current pool game. Additionally, the Center Pockets can award Trick Shots (hitting the center post and knocking one of the captured balls into a saucer) and Combo Shots (hitting the center post and knocking two captured balls into the saucers).

At the start of a game, all of the Center Pockets saucers are empty and the center post is down. The saucers are *not* qualified for a lock (operator adjustable). The arrow indicator lights, located below the saucers, show the status of the saucers when qualified (flashing), not qualified (unlit), and when a ball is locked (steady).

Proprietary and confidential information, not to be disclosed or copied without the express permission of CAPCOM® COIN-OP, INC.

NOTE ON MULTI-PLAYER GAMES: Each player must individually qualify the Center Pockets saucer locks. This information is then kept in memory from ball-to-ball and player-to-player.

The first ball to enter the Center Pockets immediately causes the center post to rise and...

- if the ball does not enter any of the three saucers and comes to rest above the center post, the ball remains captured, the saucers remain unqualified, and a new ball is released to the plunger.
- if the ball enters any of the three saucers, a *Good Shot* (30,000 points) is awarded, one ball is spotted in the current pool game, and one or both of the outside (left or right) saucers are qualified. The ball is then ejected from the saucer and comes to rest above the center post. A new ball is then served to the plunger.

The second ball is now put into play while the first ball remains captive above the center post. Shooting this ball at at the raised center post can cause the captured ball to enter one of the saucers and award a *Trick Shot* (100,000 points). If the captured ball enters the

- CENTER SAUCER, one ball is spotted in the current pool game and one or both of the outside saucers are qualified. The ball is then ejected from the saucer and comes to rest above the center post.
- LEFT OR RIGHT SAUCER (NOT QUALIFIED), one ball is spotted in the current pool game and one or both of the outside saucers are now qualified. The ball is then ejected from the saucer and comes to rest above the center post.
- LEFT OR RIGHT SAUCER (QUALIFIED), one ball is spotted in the current pool game and the ball remains locked in that saucer. The center post is then lowered and a new ball is sent to the plunger. When this next ball enters the Center Pockets, the post will be raised and...
  - if the ball does not enter one of the remaining two empty saucers and comes to rest above the center post, the second ball remains captured, and a third ball is served to the plunger.
  - if the ball enters the center saucer, a *Good Shot* (30,000 points) is awarded, one ball is spotted in the current pool game, and the empty left or right saucer is now qualified. Both balls are then ejected from the saucers, come to rest above the center post, and a third ball is served to the plunger.
  - if the ball enters the left or right saucer, and that saucer was not qualified, a *Good Shot* (30,000 points) is awarded, one ball is spotted in the current pool game, and that saucer is now qualified. Both balls are then ejected from the saucers, come to rest above the center post, and a third ball is served to the plunger.
  - If the ball enters the left or right saucer, and that saucer is qualified, a *Good Shot* (30,000 points) is awarded and one ball is spotted in the current pool game. The second ball remains locked in that saucer (one ball is now locked in each of the left and right saucers). A third ball is now served to the plunger.

For as long as one or two balls remain captured above the center post, the following can occur:

Proprietary and confidential information, not to be disclosed or copied without the express permission of CAPCOM® COIN-OP, INC.

- Shooting the ball-in-play so that it hits the raised center post, causing one of the captured balls to bounce up from the other side of the center post and enter one of the saucers awards a *Trick Shot* (100,000 points), and spots one ball in the current pool game. If the ball enters a qualified saucer, the ball remains locked. If the ball enters a non-qualified saucer, it becomes qualified and the ball is ejected.
- Shooting the ball-in-play so that it hits the raised center post, causing the captured balls to each enter left and right saucers, awards a *Combo Shot* (250,000 points) and spots two balls in the current pool game. If either ball enters a qualified saucer, that ball will remain locked in the saucer. If either ball enters a non-qualified saucer, that saucer then becomes qualified and the ball is ejected.

Once both captured balls are locked in the left and right saucers, the center post is lowered and the center saucer is qualified. If the next ball enters the center saucer, *Breakshot Frenzy* (3-Ball Mayhem) starts and continues until two of the three balls are drained. The following scoring rules apply:

- PLAYFIELD SCORES x 3 - All playfield targets score three times their normal value for as long as three balls remain in play. Once one ball drains, all playfield targets score two times their normal value for as long as two balls remain in play.
- BREAKSHOT JACKPOT - During *Breakshot Frenzy*, a Jackpot is available (indicated by the flashing Jackpot light below the center saucer). Shooting the center saucer in the Center Pockets awards the current Jackpot value The Jackpot starts at 200,000 points and increases by 25,000 for each second that Breakshot Frenzy is active (i.e. two OR three balls in play). If no targets are hit for five seconds, the Jackpot stops increasing until another target is hit. This prevents players from holding the balls on the flippers while the Jackpot keeps growing. After *Breakshot Frenzy* is over, the Jackpot value is then reset to the base value.
- DOUBLE JACKPOT - Once a ball makes the center saucer to score a Jackpot, there is a one second delay before the center post rises and the ball is ejected from the center saucer. If a second ball is shot into the Center Pockets area within that one second interval and remains captured when the post is raised, a Double Jackpot is awarded, worth two times the Jackpot value.

BONUS RACK

The Bonus Rack is located in the center of the playfield. It consists of fifteen indicator lights arranged like a "rack" of pool balls. Each light represents the status of the current game by indicating which balls have been collected (lit) or not collected (unlit) and, during the Rotation game, indicates which ball is the next ball to play (flashing). A game ball is either lit at the target and unlit in the Bonus Rack (the ball is active, or "spotted") or unlit at the target and lit in the Bonus Rack (the shot has been completed).

SHOOT AGAIN INDICATOR

The shoot again indicator light is located in the center of the playfield below the Bonus Rack. It is lit when the current player has earned at least one extra ball and unlit when the extra ball(s) are depleted. The shoot again indicator is also lit when the ball saver is active (see Ball Saver).

Proprietary and confidential information, not to be disclosed or copied without the express permission of CAPCOM® COIN-OP, INC.

BALL SAVER

A ball saver is active for an operator adjustable number of seconds at the start of each ball. If the player drains during this time period, the ball is returned to the plunger without ending the current ball in play. The ball saver is active when the Shoot Again indicator light is flashing.

OUTHOLE

The center drain ends the current ball and awards the End-of-Ball bonus. The End-of-Ball bonus awards a base value of 10,000 points, plus 10,000 points for each ball spotted during the current pinball game, multiplied by the current bonus multiplier which starts at one and is increased by the top lanes (see TOP LANES). The bonus multiplier resets to one at the start of each ball.

Proprietary and confidential information, not to be disclosed or copied without the express permission of CAPCOM® COIN-OP, INC.

NOTES

Proprietary and confidential information, not to be disclosed or copied without the express permission of CAPCOM® COIN-OP, INC.

MENU SYSTEM

The menu system is started when the coin door is opened. When the coin door is closed, the game will return to the Attract mode. If a game is in progress when the coin door is opened, the game will be restored when the coin door is closed again unless an adjustment (except volume or service credit adjustment) is made or a diagnostic function is performed.

When the coin door is opened, the dot matrix display typically shows the following Main Menu:

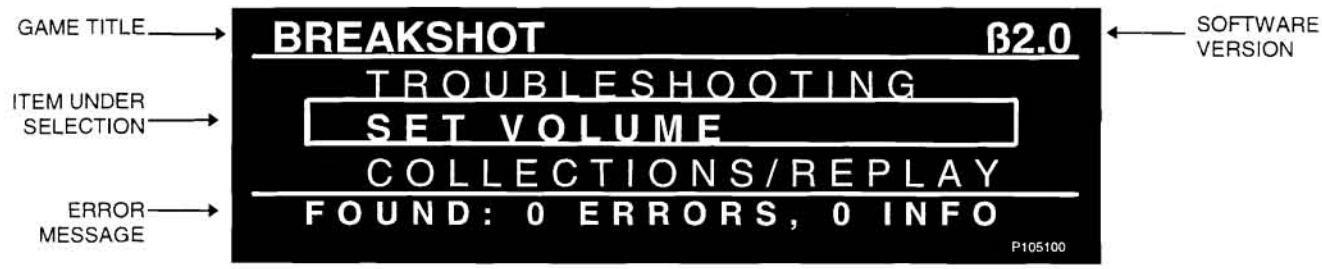

The Main Menu displays the number of ERRORS or problems that were found during game play or while in the Attract Mode. ERRORS are major problems, such as non-operative switches, that should be repaired/replaced before game play is resumed. INFO items are minor problems, such as burned-out lamps, that need repair/replacement during the next regular maintenance cycle.

The menu system is controlled by the use of the left & right flipper buttons and the Start button. Pressing these button(s) will result in the following menu actions:

1) Right Flipper button	increment, or move to the next field
2) Left Flipper button	decrement, or move to the previous field
3) Left & Right Flipper buttons together	cancel, back-up, or restore the original setting
4) Start button	accept, enter, or keep new setting

If the game has been in operation for some period of time, the operator may notice that the following Reset Replay Menu appears *before* the Main Menu:

The operator can elect to accept the suggested replay score, by pushing the start button, or ignore the change in score by pushing both flipper buttons simultaneously. This action will return the system to the Main Menu. Additional information regarding Replay credits and scores can be found in the *B1 : Standard Adjustments* section of this manual.

Proprietary and confidential information, not to be disclosed or copied without the express permission of CAPCOM® COIN-OP, INC.

MENU SYSTEM LAYOUT:

The Menu System consists of the following menus and sub-menus:

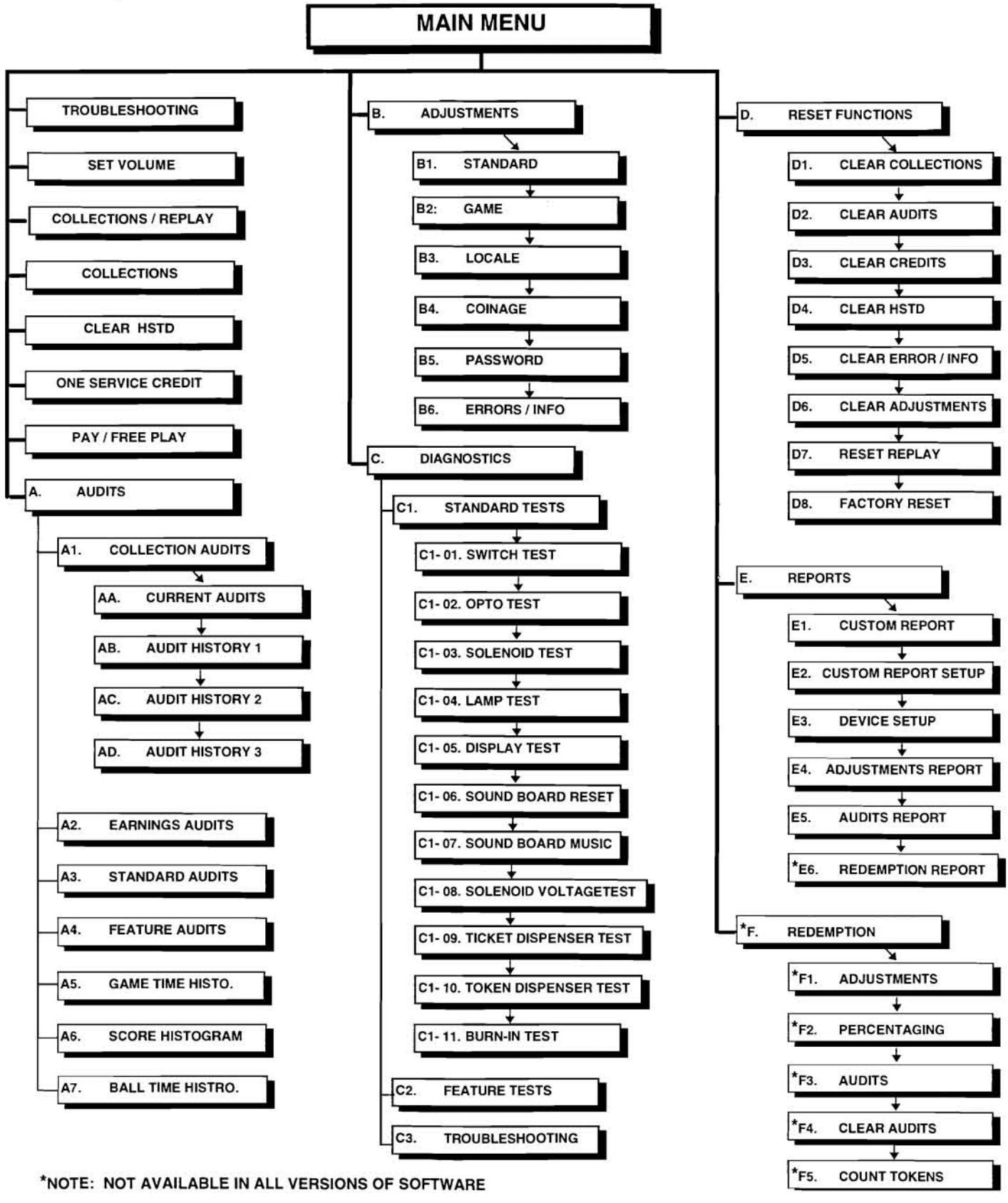

*NOTE: NOT AVAILABLE IN ALL VERSIONS OF SOFTWARE

Proprietary and confidential information, not to be disclosed or copied without the express permission of CAPCOM® COIN-OP, INC.

MAIN MENU FUNCTIONS

TROUBLESHOOTING:	Use this menu to start troubleshooting the game's electrical components. NOTE: Troubleshooting can also be accessed through the *DIAGNOSTICS* Menu.
SET VOLUME:	Plays a test tune so that the game volume can be adjusted.
COLLECTIONS/REPLAY:	Allows the operator to scroll through recent collections audits. The operator may optionally clear the audits and adjust the replay score to meet the target replay percentage (see Adjustment B1:04A, "Replay Percentage").
COLLECTIONS:	Same as COLLECTIONS/REPLAY, except the replay score is **not** adjusted when the collections audits are cleared.
ONE SERVICE CREDIT:	Issues one service credit to the game.
PAY / FREE PLAY:	Set the game mode to Pay-to-Play (disables Adjustment B1:10, *Free Play*) or to continuous Free Play (enables Adjustment B1:10, *Free Play*).
A. AUDITS:	Allows the operator to retrieve the games' earnings and performance information.
B. ADJUSTMENTS:	Operator adjustables are available for *STANDARD, GAME, LOCALE, COINAGE, PASSWORD,* and *ERRORS/INFO.*
C. DIAGNOSTICS:	Use *STANDARD TESTS, FEATURE TESTS, and TROUBLESHOOTING* to perform in-depth, automated testing of electrical and mechanical components.
D. RESET FUNCTIONS:	Allows the operator to individually clear certain *AUDITS* and *ADJUSTMENTS* data or elect to re-configure the game to the original factory settings.
E. REPORTS:	Allows the operator to output *AUDIT* and *ADJUSTMENTS* data to a serial communications device, such as a printer or laptop computer.
F. REDEMPTION	Allows the pinball game to be configured as a Redemption game (not available in all versions of software). Tickets or tokens are dispensed when a preset score is achieved by the player.

Proprietary and confidential information, not to be disclosed or copied without the express permission of CAPCOM® COIN-OP, INC.

AUDITS DATA TABLE

REF	AUDIT #	DESCRIPTION	TOTALS	PERCENTAGES	AVERAGE PER GAME
		A1 : COLLECTION AUDITS			
1	A1:AA:01	CURRENT : RECENT EARNINGS			
2	A1:AA:02	CURRENT : RECENT 1ST COIN CHUTE		% OF RECENT COINS	
3	A1:AA:03	CURRENT : RECENT 2ND COIN CHUTE		% OF RECENT COINS	
4	A1:AA:04	CURRENT : RECENT 3RD COIN CHUTE		% OF RECENT COINS	
5	A1:AA:05	CURRENT : RECENT 4TH COIN CHUTE		% OF RECENT COINS	
6	A1:AA:06	CURRENT : RECENT CREDITS			
7	A1:AA:07	CURRENT : RECENT COIN CREDITS		% OF RECENT CREDITS	
8	A1:AA:08	CURRENT : RECENT SERVICE CREDITS		% OF RECENT CREDITS	
9	A1:AA:09	CURRENT : RECENT FREE CREDITS		% OF RECENT CREDITS	
10	A1:AA:10	CURRENT : RECENT TOURNT CREDITS		% OF RECENT CREDITS	
11	A1:AB:01	HISTORY 1 : RECENT EARNINGS			
12	A1:AB:02	HISTORY 1 : RECENT 1ST COIN CHUTE		% OF RECENT COINS	
13	A1:AB:03	HISTORY 1 : RECENT 2ND COIN CHUTE		% OF RECENT COINS	
14	A1:AB:04	HISTORY 1 : RECENT 3RD COIN CHUTE		% OF RECENT COINS	
15	A1:AB:05	HISTORY 1 : RECENT 4TH COIN CHUTE		% OF RECENT COINS	
16	A1:AB:06	HISTORY 1 : RECENT EARNINGS			
17	A1:AB:07	HISTORY 1 : RECENT COIN CREDITS		% OF RECENT CREDITS	
18	A1:AB:08	HISTORY 1 : RECENT SERVICE CREDITS		% OF RECENT CREDITS	
19	A1:AB:09	HISTORY 1 : RECENT FREE CREDITS		% OF RECENT CREDITS	
20	A1:AB:10	HISTORY 1 : RECENT TOURNT CREDITS		% OF RECENT CREDITS	
21	A1:AC:01	HISTORY 2 : RECENT EARNINGS			
22	A1:AC:02	HISTORY 2 : RECENT 1ST COIN CHUTE		% OF RECENT COINS	
23	A1:AC:03	HISTORY 2 : RECENT 2ND COIN CHUTE		% OF RECENT COINS	
24	A1:AC:04	HISTORY 2 : RECENT 3RD COIN CHUTE		% OF RECENT COINS	
25	A1:AC:05	HISTORY 2 : RECENT 4TH COIN CHUTE		% OF RECENT COINS	
26	A1:AC:06	HISTORY 2 : RECENT EARNINGS			
27	A1:AC:07	HISTORY 2 : RECENT COIN CREDITS		% OF RECENT CREDITS	
28	A1:AC:08	HISTORY 2 : RECENT SERVICE CREDITS		% OF RECENT CREDITS	
29	A1:AC:09	HISTORY 2 : RECENT FREE CREDITS		% OF RECENT CREDITS	
30	A1:AC:10	HISTORY 2 : RECENT TOURNMT CREDITS		% OF RECENT CREDITS	
31	A1:AD:01	HISTORY 3 : RECENT EARNINGS			
32	A1:AD:02	HISTORY 3 : RECENT 1ST COIN CHUTE		% OF RECENT COINS	
33	A1:AD:03	HISTORY 3 : RECENT 2ND COIN CHUTE		% OF RECENT COINS	
34	A1:AD:04	HISTORY 3 : RECENT 3RD COIN CHUTE		% OF RECENT COINS	
35	A1:AD:05	HISTORY 3 : RECENT 4TH COIN CHUTE		% OF RECENT COINS	
36	A1:AD:06	HISTORY 3 : RECENT EARNINGS			
37	A1:AD:07	HISTORY 3 : RECENT COIN CREDITS		% OF RECENT CREDITS	
38	A1:AD:08	HISTORY 3 : RECENT SERVICE CREDITS		% OF RECENT CREDITS	
39	A1:AD:09	HISTORY 3 : RECENT FREE CREDITS		% OF RECENT CREDITS	
40	A1:AD:10	HISTORY 3 : RECENT TOURNT CREDITS		% OF RECENT CREDITS	
		A2 : EARNINGS AUDITS			
41	A2:01	TOTAL EARNINGS			
42	A2:02	TOTAL 1ST COIN CHUTE		% OF TOTAL COINS	
43	A2:03	TOTAL 2ND COIN CHUTE		% OF TOTAL COINS	
44	A2:04	TOTAL 3RD COIN CHUTE		% OF TOTAL COINS	
45	A2:05	TOTAL 4TH COIN CHUTE		% OF TOTAL COINS	
46	A2:06	TOTAL CREDITS			
47	A2:07	TOTAL COIN CREDITS		% OF TOTAL CREDITS	
48	A2:08	TOTAL SERVICE CREDITS		% OF TOTAL CREDITS	
49	A2:09	TOTAL FREE CREDITS		% OF TOTAL CREDITS	
50	A2:10	TOTAL TOURNAMENT CREDITS		% OF TOTAL CREDITS	
		A3 : STANDARD AUDITS			
51	A3:01	AVERAGE BALL TIME	HRS MIN SEC		
52	A3:02	1 PLAYER GAMES		% OF ALL GAMES	
53	A3:03	2 PLAYER GAMES		% OF ALL GAMES	
54	A3:04	3 PLAYER GAMES		% OF ALL GAMES	
55	A3:05	4 PLAYER GAMES		% OF ALL GAMES	
56	A3:06	TOTAL STARTED CREDITS			
57	A3:07	TOTAL FINISHED CREDITS			
58	A3:08	REPLAY AWARDS		% OF GAMES	
59	A3:09	TOTAL STARTED BALLS			

Proprietary and confidential information, not to be disclosed or copied without the express permission of CAPCOM® COIN-OP, INC.

AUDITS DATA TABLE

REF	AUDIT #	DESCRIPTION	TOTALS	PERCENTAGES	AVERAGE PER GAME
		A3 : STANDARD AUDITS (CONTINUED)			
60	A3:10	TOTAL FINISHED BALLS			
61	A3:11	MATCH AWARDS		% OF GAMES	
62	A3:12	EXTRA BALLS			
63	A3:13	LEFT DRAINS		% OF ALL DRAINS	
64	A3:14	RIGHT DRAINS		% OF ALL DRAINS	
65	A3:15	CENTER DRAINS		% OF ALL DRAINS	
66	A3:16	TILTS			
67	A3:17	SLAM TILTS			
68	A3:18	HSTD CREDITS		% OF GAMES	
69	A3:19	BUY-IN 1			
70	A3:20	BUY-IN 2			
71	A3:21	BUY-IN 3 +			
72	A3:22	HSTD RESET COUNT			
73	A3:23	TOTAL TIME ON	DAYS HRS MIN SEC		
74	A3:24	TOTAL GAME TIME	HRS MIN SEC	% OF TOTAL TIME ON	
75	A3:25	AVERAGE GAME TIME	HRS MIN SEC		
76	A3:26	TOTAL BURN-IN TIME	HRS MIN SEC		
77	A3:27	TOTAL TICKETS			
78	A3:28	TOTAL TOKENS			
		A4 : FEATURE AUDITS			
79	A4:01	BONUS X INCREASES			
80	A4:02	LEFT SUPER CUES			
81	A4:03	MAX. CONSECUTIVE LEFT SUPER CUES			
82	A4:04	RIGHT SUPER CUES			
83	A4:05	MAX. CONSECUTIVE RIGHT SUPER CUES			
84	A4:06	SUPER CUE COMBOS			
85	A4:07	BANKSHOT SKILL SHOTS			
86	A4:08	MAX. CONSECUTIVE BANKSHOTS			
87	A4:09	BANKSHOT BONUS COLLECTS			
88	A4:10	CAPTIVE BALL EXTRA BALLS			
89	A4:11	BREAKSHOT FRENZY			
90	A4:12	JACKPOTS			
91	A4:13	DOUBLE JACKPOTS			
92	A4:14	SUPER JACKPOTS			
93	A4:15	CALL YOUR SHOT			
94	A4:16	CALL YOUR SHOT MADE LEFT			
95	A4:17	CALL YOUR SHOT MADE CENTER			
96	A4:18	CALL YOUR SHOT MADE RIGHT			
97	A4:19	SAUCER BONUS COLLECTS			
98	A4:20	BALLORAMA			
99	A4:21	BALLORAMA BONUS COLLECTED			
100	A4:22	8 BALL WINS			
101	A4:23	ROTATION WINS			
102	A4:24	9 BALL WINS			
103	A4:25	9 BALL POINTS			
104	A4:26	9 BALL EXTRA BALLS			
105	A4:27	9 BALL SPECIALS			
106	A4:28	KICKBACKS LIT			
107	A4:29	KICKBACKS			
108	A4:30	REPEAT KICKBACKS			
109	A4:31	BALL SAVER			
110	A4:32	SPECIAL CREDITS			
111	A4:33	CUTTHROAT GAMES			
112	A4:34	CUTTHROAT BALLS SPOTTED			
113	A4:35	CUTTHROAT JACKPOTS			
114	A4:36	CUTTHROAT CREDITS			

Proprietary and confidential information, not to be disclosed or copied without the express permission of CAPCOM® COIN-OP, INC.

AUDITS DATA TABLE

		A5: GAME TIME HISTOGRAM	
115	A5	GAME TIME HISTOGRAM 0.0 - 0.9 MINS	
116	A5	GAME TIME HISTOGRAM 1.0 - 1.9 MINS	
117	A5	GAME TIME HISTOGRAM 2.0 - 2.9 MINS	
118	A5	GAME TIME HISTOGRAM 3.0 - 3.9 MINS	
119	A5	GAME TIME HISTOGRAM 4.0 - 4.9 MINS	
120	A5	GAME TIME HISTOGRAM 5.0 - 5.9 MINS	
121	A5	GAME TIME HISTOGRAM 6.0 - 6.9 MINS	
122	A5	GAME TIME HISTOGRAM 7.0 - 7.9 MINS	
123	A5	GAME TIME HISTOGRAM 8.0 - 8.9 MINS	
124	A5	GAME TIME HISTOGRAM 9.0 - 9.9 MINS	
125	A5	GAME TIME HISTOGRAM 10 - 11 MINS	
126	A5	GAME TIME HISTOGRAM 11 - 12 MINS	
127	A5	GAME TIME HISTOGRAM 12 - MINS	
		A6: SCORE HISTOGRAM	
128	A6	SCORE HISTOGRAM 0 - 1 MILLION	
129	A6	SCORE HISTOGRAM 2.0 - 3 MILLION	
130	A6	SCORE HISTOGRAM 4.0 - 5 MILLION	
131	A6	SCORE HISTOGRAM 6.0 - 7 MILLION	
132	A6	SCORE HISTOGRAM 8.0 - 9 MILLION	
133	A6	SCORE HISTOGRAM 10.0 - 11 MILLION	
134	A6	SCORE HISTOGRAM 12.0 - 13 MILLION	
135	A6	SCORE HISTOGRAM 14.0 - 15 MILLION	
136	A6	SCORE HISTOGRAM 16.0 - 17 MILLION	
137	A6	SCORE HISTOGRAM 18.0 - 19 MILLION	
138	A6	SCORE HISTOGRAM 20.0 - 21 MILLION	
139	A6	SCORE HISTOGRAM 22.0 - 23 MILLION	
140	A6	SCORE HISTOGRAM 24.0 - 25 MILLION	
141	A6	SCORE HISTOGRAM 26.0 - 27 MILLION	
142	A6	SCORE HISTOGRAM 28.0 - 29 MILLION	
143	A6	SCORE HISTOGRAM 30.0 - 31 MILLION	
144	A6	SCORE HISTOGRAM 32.0 - 33 MILLION	
145	A6	SCORE HISTOGRAM 34.0 - 35 MILLION	
146	A6	SCORE HISTOGRAM 36.0 - 37 MILLION	
147	A6	SCORE HISTOGRAM 38.0 - 39 MILLION	
148	A6	SCORE HISTOGRAM 40.0 - 41 MILLION	
149	A6	SCORE HISTOGRAM 42.0 - 43 MILLION	
150	A6	SCORE HISTOGRAM 44.0 - 45 MILLION	
151	A6	SCORE HISTOGRAM 46.0 - 47 MILLION	
152	A6	SCORE HISTOGRAM 48.0 - 49 MILLION	
153	A6	SCORE HISTOGRAM 50.0 - MILLION	
		A7: BALL TIME HISTOGRAM	
154	A7	BALL TIME HISTOGRAM 0 - 9 SECS	
155	A7	BALL TIME HISTOGRAM 10 - 19 SECS	
156	A7	BALL TIME HISTOGRAM 20 - 29 SECS	
157	A7	BALL TIME HISTOGRAM 30 - 39 SECS	
158	A7	BALL TIME HISTOGRAM 40 - 49 SECS	
159	A7	BALL TIME HISTOGRAM 50 - 59 SECS	
160	A7	BALL TIME HISTOGRAM 60 - 69 SECS	
161	A7	BALL TIME HISTOGRAM 70 - 79 SECS	
162	A7	BALL TIME HISTOGRAM 80 - 89 SECS	
163	A7	BALL TIME HISTOGRAM 90 - 99 SECS	
164	A7	BALL TIME HISTOGRAM 100 - 109 SECS	
165	A7	BALL TIME HISTOGRAM 110 - 119 SECS	
166	A7	BALL TIME HISTOGRAM 120 - 129 SECS	
167	A7	BALL TIME HISTOGRAM 130 - 139 SECS	
168	A7	BALL TIME HISTOGRAM 140 - 149 SECS	
169	A7	BALL TIME HISTOGRAM 150 - 159 SECS	
170	A7	BALL TIME HISTOGRAM 160 - 169 SECS	
171	A7	BALL TIME HISTOGRAM 170 - 179 SECS	
172	A7	BALL TIME HISTOGRAM 180 - 189 SECS	
173	A7	BALL TIME HISTOGRAM 190 - 199 SECS	
174	A7	BALL TIME HISTOGRAM 200 - 209 SECS	
175	A7	BALL TIME HISTOGRAM 210 - SECS	

Proprietary and confidential information, not to be disclosed or copied without the express permission of CAPCOM® COIN-OP, INC.

B. ADJUSTMENTS

B1: STANDARD ADJUSTMENTS

AUDIT REF.	AUDIT NAME	RANGE	FACTORY SETTING	DESCRIPTION
B1-01	BALLS PER GAME	1 - 10 BALLS	3 BALLS	THE NUMBER OF BALLS GIVEN IN A GAME.
B1-02	TILT WARNINGS	0 - 10	2	THE NUMBER OF TIMES THE GAME CAN "TILT" BEFORE ENDING THE CURRENT BALL IN PLAY.
B1-03	ATTRACT MODE SOUNDS	YES, NO	YES	SELECT WHETHER SOUNDS & MUSIC ARE PLAYED DURING ATTRACT MODE.
B1-04+	ALLOW REPLAY	YES, NO	YES	SELECT WHETHER REPLAY CREDITS ARE AWARDED. IF ***YES*** IS SELECTED, ADDITIONAL REPLAY ADJUSTMENTS CAN BE SET (SEE B1-04A,B,C,D).
B1-04A	REPLAY PERCENT	5 - 50 %	10%	THE "IDEAL" PERCENTAGE OF GAMES THAT RECEIVE A REPLAY. THIS VALUE IS THEN USED TO SUGGEST ACTUAL REPLAY SCORE VALUES ONCE A HISTORY OF GAME SCORES IS ACCUMULATED.
B1-04B	REPLAY START SCORE	0 - 4,000,000,000	100,000,000	THE INITIAL SCORE AT WHICH A REPLAY CREDIT IS AWARDED.
B1-04C	REPLAY MINIMUM	0 - 4,000,000,000	70,000,000	THE MINIMUM SCORE, DURING A REPLAY CREDIT GAME, THAT MUST BE ACCOMPLISHED BEFORE AN ADDITIONAL REPLAY CREDIT IS AWARDED.
B1-04D	REPLAY BUMP	0 - 4,000,000,000	10,000,000	THE AMOUNT BY WHICH THE REPLAY START SCORE IS INCREASED AFTER A REPLAY CREDIT IS AWARDED.
B1-04E	REPLAY INDICATOR	ON, OFF	OFF	WHEN SET TO *ON*, AN INDICATOR (♠) APPEARS IN EACH CORNER OF THE DISPLAY DURING ATTRACT MODE (REPLAY AT...) TO SHOW A NEW REPLAY VALUE HAS BEEN REACHED (SEE B1-04A).
B1-04F	REPLAY AWARD	CREDIT, EXTRA BALL, POINTS	CREDIT	THE TYPE OF AWARD ISSUED WHEN A *REPLAY* IS EARNED BY THE PLAYER.
B1-04G	COIN DOOR REPLAY	ON, OFF	ON	WHEN SET TO *ON*, THE OPERATOR WILL BE PROMPTED (WHEN OPENING THE COIN DOOR) TO CHANGE THE REPLAY SCORE IN ORDER TO SATISFY THE REPLAY PERCENT (B1-04A). NOTE: THE MENU SYSTEM IS INTERRUPTED UNTIL THIS PROMPT IS ANSWERED
B1-05+	ALLOW HSTD	YES, NO	YES	SELECT WHETHER THE HIGH SCORE TO DATE FEATURE IS ENABLED. IF ***YES*** IS SELECTED, ADDITIONAL HSTD ADJUSTMENTS CAN BE SET (SEE B1-05A,B,C,D).
B1-05A	HSTD FIRST SCORE	0 - 42,999,000,000	500,000,000	THE HIGHEST SCORE WRITTEN TO THE HSTD TABLE **AFTER** THE TABLE IS CLEARED BY THE RESET FUNCTION (D4). THE GAME WILL AUTOMATICALLY GENERATE SCORES BETWEEN THE *HSTD FIRST SCORE* AND THE *HSTD LAST SCORE* TO FILL-IN MIDDLE ENTRIES IN THE TABLE.
B1-05B	HSTD LAST SCORE	0 - 42,999,000,000	250,000,000	THE LOWEST SCORE WRITTEN TO THE HSTD TABLE **AFTER** THE TABLE IS CLEARED BY THE RESET FUNCTION (D4). THE GAME WILL AUTOMATICALLY GENERATE SCORES BETWEEN THE *HSTD FIRST SCORE* AND THE *HSTD LAST SCORE* TO FILL-IN MIDDLE ENTRIES IN THE TABLE.
B1-05C	CREDITS FOR GRAND CHAMP	0 - 99 CREDITS	3 CREDITS	THE NUMBER OF CREDITS AWARDED FOR EXCEEDING THE *GRAND CHAMP*.
B1-05D	CREDITS FOR #1-4 SCORES	0 - 99 CREDITS	1 CREDIT	THE NUMBER OF CREDITS AWARDED FOR EXCEEDING THE #1 -#4 HIGH SCORES.
B1-06	MATCH PERCENT	0 - 95%	8%	THE PERCENTAGE OF GAMES THAT AWARD A MATCH CREDIT AT THE END OF THE GAME.
B1-07	SPECIAL AWARD	CREDIT, EXTRA BALL, POINTS	CREDIT	SELECT THE TYPE OF AWARD ISSUED WHEN A *SPECIAL* IS EARNED BY THE PLAYER.
B1-08	EXTRA BALL AWARD	EXTRA BALL, POINTS	EXTRA BALL	THE TYPE OF AWARD ISSUED WHEN AN *EXTRA BALL* IS EARNED BY THE PLAYER.

Proprietary and confidential information, not to be disclosed or copied without the express permission of CAPCOM® COIN-OP, INC.

B1: STANDARD ADJUSTMENTS (CONTINUED)

AUDIT REF.	AUDIT NAME	RANGE	FACTORY SETTING	DESCRIPTION
B1-9	SET GAME LOCATION	0 - 99,999	0	A TRACKING NUMBER USED TO INDICATE THE PHYSICAL LOCATION OF A GAME.
B1-10	SET MACHINE ID	0 - 99,999	0	ASSIGN A SECONDARY ID TO A GAME WHERE MULTIPLE GAMES MAY EXIST IN THE SAME LOCATION.
B1-11	FREE PLAY	YES, NO	NO	ENABLES / DISABLES *FREE PLAY* MODE. ALSO CONTROLS THE MAIN MENU SETTINGS FOR *PAY-TO- PLAY* AND *FREE PLAY*.
B1-12	PLAY MODE	NORMAL, TOURNAMENT	NORMAL	SELECT *NORMAL* OR *TOURNAMENT* MODE. *TOURNAMENT* MODE EQUALIZES THE SCORING OF CERTAIN FEATURES AMONGST PLAYERS IN MULTI-PLAYER GAMES.
B1-13	SOL.(ENOID) VOLTAGE PERCENT	0 - 90%	10%	SELECT THE PERCENTAGE OF SOLENOID VOLTAGE REGULATION (FOR DISPLAY PURPOSES ONLY). **DOES NOT** ACTIVELY REGULATE THE GAMES' SOLENOIDS.
B1-14	SHOW MESSAGE OF THE DAY	YES, NO, VIEW/EDIT	NO	SELECT A MESSAGE FOR DISPLAY DURING ATTRACT MODE. THIS MESSAGE MAY BE CUSTOMIZED BY CHOOSING *VIEW/EDIT*.
B1-15	FLIPPER STRENGTH	1 - 16	12	SELECT RELATIVE STRENGTH OF FLIPPER COILS. A SETTING OF *12* REPRESENTS 3/4 STRENGTH (12/16). MAY BE USED TO ADJUST THE AMOUNT OF BALL TRAVEL WHEN PLAYFIELD PITCH IS CHANGED.
B1-16+	TICKET DISPENSER	NONE STANDARD TICKET	NONE	SELECT THE TYPE OF TICKET DISPENSER (IF INSTALLED ON THE GAME). AFTER *TICKET DISPENSER* IS ENTERED, AUDIT A3:27, *TOTAL TICKETS*, IS INCREMENTED AND THE TICKET MOTOR DRIVE IS PULSED TICKET DISPENSERS CURRENTLY SUPPORTED: 1) DELTRONICS, MODEL 1275; 2) COIN CONTROLS, MODEL CTD10. **NOTE:** AFTER SERVICING AN "OUT OF TICKETS" CONDITION OR A DISPENSER JAM, YOU CAN EITHER: A) *CONTINUE* DISPENSING TICKETS FROM THE GAME-IN-PROGRESS BY CLOSING THE COIN DOOR, OR B) *CLEAR* DISPENSER MEMORY BY INTERRUPTING POWER TO THE GAME (OFF, THEN ON).
B1-16A	TICKETS / CREDIT	0, 1 - 99	0	SELECT THE NUMBER OF TICKETS TO BE DISPENSED FOR EACH *FREE CREDIT* AWARDED (REPLAYS, SPECIALS, MATCH, AND HSTD). NO CREDITS WILL THEN BE ISSUED TO THE PLAYER, ONLY DISPENSED TICKETS. IF YOUR GAME IS **NOT** EQUIPPED WITH A TICKET DISPENSER, SELECT "0", OTHERWISE, SELECT FROM 1 TO 99 TICKET(S) TO BE DISPENSED PER FREE CREDIT AWARDED (EXAMPLE: IF THIS OPTION IS SET TO "6" AND "3" FREE CREDITS ARE EARNED, "18" TOTAL TICKETS WILL BE DISPENSED)

Proprietary and confidential information, not to be disclosed or copied without the express permission of CAPCOM® COIN-OP, INC.

B1: STANDARD ADJUSTMENTS (CONTINUED)

AUDIT REF.	AUDIT NAME	RANGE	FACTORY SETTING	DESCRIPTION
B1-17+	TOKEN DISPENSER	NONE *BALLYWULFF* DISPENSER *COIN CONTROLS* DISPENSER *COIN CONTROLS* COMPACT HOPPER (RED DISC) *COIN CONTROLS* COMPACT HOPPER (PURPLE OR GREEN DISCS) *COIN CONTROLS* COMPACT HOPPER (GRAY, BLACK, BROWN, OR BLUE DISCS) *COIN CONTROLS* COMPACT HOPPER (5 AWP DISC USED IN ITALY)	NONE	SELECT THE TYPE OF TOKEN DISPENSER (IF INSTALLED ON THE GAME). AFTER *TOKEN DISPENSER* IS ENTERED, AUDIT A3:28, *TOTAL TOKENS*, IS INCREMENTED AND THE TOKEN METER DRIVE IS PULSED **NOTE:** AFTER SERVICING AN "OUT OF TOKENS" CONDITION OR A DISPENSER JAM, YOU CAN EITHER: A) *CONTINUE* DISPENSING TOKENS FROM THE GAME-IN-PROGRESS BY CLOSING THE COIN DOOR, OR B) *CLEAR* DISPENSER MEMORY BY INTERRUPTING POWER TO THE GAME (OFF, THEN ON).
B1-17A	TOKENS / CREDIT	0, 1 - 99	0	SELECT THE NUMBER OF TOKENS TO BE DISPENSED FOR EACH *FREE CREDIT* AWARDED (REPLAYS, SPECIALS, MATCH, AND HSTD). NO CREDITS WILL THEN BE ISSUED TO THE PLAYER, ONLY DISPENSED TOKENS. IF YOUR GAME IS **NOT** EQUIPPED WITH A TOKEN DISPENSER, SELECT "0", OTHERWISE, SELECT FROM 1 TO 99 TOKEN(S) TO BE DISPENSED PER FREE CREDIT AWARDED (EXAMPLE: IF THIS OPTION IS SET TO "6" AND "3" FREE CREDITS ARE EARNED, "18" TOTAL TOKENS WILL BE DISPENSED)

B2: GAME ADJUSTMENTS

AUDIT REF.	AUDIT NAME	RANGE	FACTORY SETTING	DESCRIPTION
B2-01	GAME DIFFICULTY	EXTRA EASY, EASY, NORMAL, HARD, EXTRA HARD	NORMAL	SETS THE OVERALL DIFFICULTY OF THE GAME. THIS OPTION WILL AUTOMATICALLY CONFIGURE THE SETTINGS FOR B2-02 THROUGH B2-24.
B2-02	ALLOW LANE CHANGE	YES, NO	YES	"YES" ALLOWS THE PLAYER TO SELECT ANY GAME BY SHIFTING THE LIT TOPLANE DIAMOND. LEFT FLIPPER BUTTON SHIFTS DIAMOND TO THE LEFT, RIGHT FLIPPER BUTTON SHIFTS RIGHT. THIS FEATURE IS ALWAYS ACTIVE WHEN ENABLED.
B2-03	CAPTIVE HITS FOR EXTRA BALL	1 - 7	4	SETS THE NUMBER OF TIMES THE CAPTIVE BALL MUST BE HIT TO COLLECT THE FIRST CAPTIVE BALL EXTRA BALL.
B2-04	MAX. CAPTIVE BALL EXTRA BALLS	0-99	1	SET MAXIMUM NUMBER OF CAPTIVE BALL EXTRA BALLS THAT CAN BE EARNED BY A PLAYER IN A GAME.
B2-05	CAPTIVE BALL MEMORY	YES, NO	YES	SETS WHETHER OR NOT *CAPTIVE BALL* HITS ARE REMEMBERED FROM BALL-TO-BALL.
B2-06	KICKER AT BALL START	YES, NO, FIRST BALL ONLY	FIRST BALL ONLY	SELECT "FIRST BALL ONLY" TO ENABLE THE LEFT OUTLANE KICKER AT THE START OF THE FIRST BALL; "YES" ENABLES THE KICKER AT THE START OF EVERY BALL.
B2-07	MAX. KICKBACKS	0 - 99	1	SETS THE MAXIMUM NUMBER OF LEFT OUTLANE KICKBACKS A PLAYER CAN "STACK".
B2-08	KICKER MEMORY	YES, NO	YES	SETS WHETHER OR NOT KICKBACKS ARE REMEMBERED FROM BALL-TO-BALL.

Proprietary and confidential information, not to be disclosed or copied without the express permission of CAPCOM® COIN-OP, INC.

B2: GAME ADJUSTMENTS (CONTINUED)

AUDIT REF.	AUDIT NAME	RANGE	FACTORY SETTING	DESCRIPTION
B2-09	BALL SAVER TIME	0 - 60 SECONDS	8 SECONDS	SETS A GRACE PERIOD FOR "QUICK DRAIN" BALLS. ANY BALL "LOST" BEFORE THE TIMER EXPIRES WILL BE RETURNED TO THE PLAYER.
B2-10	SAUCER BALL SAVER	YES, NO	YES	IF "YES", RETURNS TO THE PLAYER ANY BALLS DRAINED WITHIN 4 SECONDS (OR 1 SWITCH HIT) AFTER BEING EJECTED FROM ANY OF THE EJECT SAUCERS. USED TO COMPENSATE FOR A WEAK EJECT SAUCER KICKING A BALL RIGHT BETWEEN THE FLIPPERS.
B2-11	CENTER POCKETS DIFFICULTY	EASY, NORMAL, HARD	NORMAL	SETS THE INITIAL DIFFICULTY FOR *CENTER POCKETS* WHEN PROGRESSING TOWARDS *BREAKSHOT FRENZY* (3 BALL MAYHEM). EASY : ROUND 1 - BOTH THE LEFT AND RIGHT POCKETS ARE LIT FOR LOCKS AS SOON AS ONE BALL ENTERS THE *CENTER POCKETS*. AFTER THE SECOND ROUND, ONE SHOT INTO ANY ONE OF THE THREE EJECT SAUCERS IS REQUIRED TO LIGHT THE LOCKS. AFTER THE FOURTH ROUND, TWO SHOTS INTO THE UNLIT EJECT SAUCERS ARE REQUIRED TO LIGHT THE LOCKS (THE FIRST SHOT INTO AN UNLIT EJECT SAUCER LIGHTS ONE LOCK, THE SECOND SHOT INTO AN UNLIT EJECT SAUCER LIGHTS THE SECOND LOCK). THIS CONTINUES FOR THE REST OF THE GAME. NORMAL: BOTH THE LEFT AND RIGHT POCKETS ARE LIT FOR LOCKS AS SOON AS ONE BALL ENTERS THE *CENTER POCKETS*. AFTER THE FIRST ROUND OF BREAKSHOT FRENZY, ONE SHOT INTO ANY ONE OF THE THREE EJECT SAUCERS IS REQUIRED TO LIGHT THE LOCKS. AFTER THE THIRD ROUND , TWO SHOTS INTO UNLIT EJECT SAUCERS ARE REQUIRED TO LIGHT THE LOCKS (THE FIRST SHOT INTO AN UNLIT EJECT SAUCER LIGHTS ONE LOCK, THE SECOND SHOT INTO AN UNLIT EJECT SAUCER LIGHTS THE SECOND LOCK). THIS CONTINUES FOR THE REST OF THE GAME. HARD: THROUGHOUT THE ENTIRE GAME, TWO SHOTS INTO UNLIT EJECT SAUCERS ARE REQUIRED TO LIGHT THE LOCKS (THE FIRST SHOT INTO AN UNLIT EJECT SAUCER LIGHTS ONE LOCK, THE SECOND SHOT INTO AN UNLIT EJECT SAUCER LIGHTS THE SECOND LOCK).
B2-12	EASY JACKPOTS	0-99	2	SET THE NUMBER OF "EASY" JACKPOTS DURING *BREAKSHOT FRENZY*. "EASY" JACKPOTS ARE COLLECTED BY SIMPLY SHOOTING THE CENTER POCKET SAUCER. AFTER THE "EASY" JACKPOTS ARE COLLECTED, THE PLAYER MUST SHOOT ONE OF THE THREE CENTER POCKETS EJECT SAUCERS TO RE-LIGHT THE JACKPOT BEFORE IT CAN BE COLLECTED AGAIN.
B2-13	JACKPOTS FOR SUPER JACKPOT	1-99	4	SETS THE REQUIRED NUMBER OF *BREAKSHOT FRENZY* JACKPOTS TO BE COLLECTED BEFORE A *SUPER JACKPOT* IS AWARDED. A *SUPER JACKPOT* IS WORTH TWO TIMES THE VALUE OF A NORMAL JACKPOT.

Proprietary and confidential information, not to be disclosed or copied without the express permission of CAPCOM® COIN-OP, INC.

B2: GAME ADJUSTMENTS (CONTINUED)

AUDIT REF.	AUDIT NAME	RANGE	FACTORY SETTING	DESCRIPTION
B2-14	BANKSHOT DIFFICULTY	NORMAL, HARD	NORMAL	SETS THE LENGTH OF TIME FOR MAKING LIT BANKSHOTS. THE BANKSHOT (MINI ORBIT) LANE IS LIT AFTER ANY OF THE FOLLOWING SHOTS ARE MADE: 1) A BANKSHOT PLUNGER SKILL SHOT AT THE START OF A BALL; 2) ONE SHOT TO THE BANKSHOT LANE (FOR CONSECUTIVE BANKSHOT ORBITS); 3) A LEFT ORBIT IS COMPLETED (FOR THE BANKSHOT BONUS COLLECT). NORMAL: THE BANKSHOT REMAINS LIT UNTIL ANY OTHER TARGET (BESIDES THE BANKSHOT) IS HIT WITH THE EXCEPTION OF THE RIGHT THREE BANK DROP TARGETS AND THEIR ASSOCIATED STANDUP TARGET. HARD: THE BANKSHOT REMAINS LIT UNTIL ANY OTHER TARGET (BESIDES THE BANKSHOT) IS HIT.
B2-15	MAX. EXTRA BALLS	1 - 99	3	SETS THE MAXIMUM NUMBER OF EXTRA BALLS A PLAYER CAN "STACK".
B2-16	BUMPER TILT DISABLE	YES, NO	NO	SELECT "YES" TO DISABLE GAME TILTS WHILE THE BALL IS CONTACTING THE STAR BUMPER(S).
B2-17	9 BALL SPECIAL	NEVER, 9 BALL GAME 1 - 9 BALL GAME 10	9 BALL GAME 2	SELECT WHEN *SPECIAL* BECOMES AVAILABLE DURING THE 9 BALL GAME.
B2-18	FREEZE 9 BALL AWARDS	YES, NO	YES	SELECT "YES" TO CYCLE THE NINE BALL AWARD BETWEEN POINTS, EXTRA BALL, AND SPECIAL. NOTE: THIS ADJUSTMENT WILL REMAIN ON "POINTS" WHEN THE BALL IS INACTIVE (NO POINTS ARE SCORED). THIS PREVENTS THE PLAYER FROM WAITING FOR A MORE VALUABLE AWARD TO BECOME AVAILABLE. AS SOON AS POINTS ARE SCORED, THE NINE BALL AWARD BEGINS CYCLING AGAIN.
B2-19	REPEAT 9 BALL AWARDS	YES, NO	NO	SELECT WHETHER NINE BALL AWARDS ARE AVAILABLE FOR EACH NINE BALL GAME. YES - ALL OF THE NINE BALL AWARDS ARE AVAILABLE DURING EVERY GAME (WITH THE POSSIBLE EXCEPTION OF "SPECIAL" AS DETERMINED BY SETTING B2-17). NO - THE PLAYER MUST COLLECT EVERY AVAILABLE NINE BALL AWARD BEFORE THEY BECOME AVAILABLE AGAIN. FOR EXAMPLE, IF A PLAYER COLLECTS AN *EXTRA BALL* , ONLY *POINTS* AND *SPECIAL AWARDS* WILL BE AVAILABLE IN THE SECOND GAME OF NINEBALL. IF THE PLAYER THEN COLLECTS *SPECIAL* IN THE SECOND GAME, ONLY THE *POINTS* AWARD WILL BE AVAILABLE IN THE THIRD NINEBALL GAME. AFTER THE *POINTS* AWARD IS COLLECTED, ALL THREE AWARDS BECOME AVAILABLE AGAIN IN THE NEXT NINEBALL GAME.
B2-20	UPPER RIGHT FLIPPER STRENGTH	2-16	10	SELECT RELATIVE STRENGTH OF FLIPPER COILS. A SETTING OF *10* REPRESENTS 5/8 STRENGTH (10/16). MAY BE USED TO ADJUST THE AMOUNT OF BALL TRAVEL WHEN PLAYFIELD PITCH IS CHANGED.
B2-21	SCORE REEL CHIMES	ON, OFF	ON	SETS WHETHER OR NOT CHIME SOUND EFFECTS ARE PLAYED DURING THE SCORE REEL ANIMATION.
B2-22	GAMES UNTIL CUTTHROAT COUNTDOWN	0-99	3	SPECIFIES THE NUMBER OF POOL GAMES THAT MUST BE COMPLETED BEFORE THE PLAYER ENTERS CUTTHROAT COUNTDOWN. **NOTE: IF SET TO 0, THEN CUTTHROAT COUNTDOWN IS NEVER AVAILABLE.**
B2-23	CUTTHROAT CREDITS	0-99	1	SETS THE NUMBER OF CREDITS THAT A PLAYER RECEIVES FOR MAKING THE CUTTHROAT CHAMPIONS HIGH SCORE TABLE.

Proprietary and confidential information, not to be disclosed or copied without the express permission of CAPCOM® COIN-OP, INC.

B2: GAME ADJUSTMENTS (CONTINUED)

AUDIT REF.	AUDIT NAME	RANGE	FACTORY SETTING	DESCRIPTION
B2-24	MUSIC VOLUME	0-100	100	SETS THE VOLUME FOR THE BACKGROUND MUSIC DURING A GAME. SPECIFIED AS A PERCENTAGE OF THE OVERALL VOLUME SETTING.

B3: LOCALE ADJUSTMENTS

AUDIT REF.	AUDIT NAME	RANGE	FACTORY SETTING	DESCRIPTION
B3-01	COUNTRY	UNITED STATES, FRANCE, GERMANY, SPAIN, MEXICO, CANADA (ENGLISH) , CANADA (FRENCH), SWITZERLAND (GERMAN), SWITZERLAND (FRENCH), SWITZERLAND (ITALIAN); ITALY, UNITED KINGDOM, NETHERLANDS	UNITED STATES	SETS THE COUNTRY LOCATION OF THE GAME. THIS SETTING CONTROLS NUMBERS, TIMES, DATES, AND MONETARY VALUES SHOWN ON THE DOT MATRIX DISPLAY. THIS OPTION WILL ALSO CHANGE THE SETTINGS FOR B3-02 AND B3-03.
B3-02	TEXT LANGUAGE	ENGLISH, FRENCH, GERMAN, SPANISH, **ITALIAN**, DUTCH	ENGLISH	SETS THE LANGUAGE USED FOR TEXT SHOWN ON THE DOT MATRIX DISPLAY.
B3-03	SPEECH LANGUAGE	ENGLISH, FRENCH, GERMAN, SPANISH, **ITALIAN**, DUTCH	ENGLISH	SETS THE LANGUAGE USED FOR SOUND EFFECTS.
		NOTE: LANGUAGES AND SPEECH IN **BOLD** ARE NOT CURRENTLY IMPLEMENTED.		

B4: COINAGE ADJUSTMENTS

AUDIT REF.	AUDIT NAME	RANGE	FACTORY SETTING	DESCRIPTION
B4-01	CONFIGURE COINAGE TO	1 GAME / 1 COIN 1 GAME / 2 COINS 1 GAME / 3 COINS 2 GAMES / 1 COIN 1/1 3/2 GAMES/COINS 1/2 3/4 GAMES/COINS 1/2 2/3 3/4 1/2 2/4 3/6 5/8 USA, 50c, 5/$2.00 USA, 50c, 2/75c 3/$1.00 FR 3/1 5/2 10/5 20/11 FR 5/1 10/3 20/7 FR 3/1 5/2 10/4 20/9 GERMAN 1/2 2/3 3/4 5/5 GERMAN 1/2 2/3 3/4 4/5 GERMAN 1/1 6/5 SPAIN, 1/100 6/500 U. K., 3/L1 U. K., 1/50p SWISS, 1/1 2/2 6/5 SWISS, 1/1 3/2 8/5 SWISS, 1/1 ITALY 1/2X500L 3/4X500L ITALY 1/500L ITALY 1/2X500L HOLL. 1/1G 3/2.5G 6/5G GREECE 1/100Dr. GREECE 1/200Dr. 2/300 GREECE 1/100Dr. 2/150 SWEDEN 1/10Kr. 2/15 3/20 SWEDEN 1/ 5Kr. 2/10 5/20 AUSTRALIA 1/$1 3/2 CUSTOM PRICING	SET ACCORDING TO COUNTRY DEFAULT	SETS THE RATIO OF NUMBER OF COINS TO THE NUMBER OF CREDITS. SELECT THE ***CUSTOM PRICING*** FEATURE AND CHOOSE UP TO FOUR SEPARATE COIN/CREDIT CONFIGURATIONS.

Proprietary and confidential information, not to be disclosed or copied without the express permission of CAPCOM® COIN-OP, INC.

B4: COINAGE ADJUSTMENTS (CONTINUED)

AUDIT REF.	AUDIT NAME	RANGE	FACTORY SETTING	DESCRIPTION
B4-02+	COIN DOOR TYPE	CUSTOM ALL CHUTE UNITS 1 COIN USA 25-25 USA 25 W/MULTIPULSE DBV FRANCE ELEC1-5-10-20 FRANCE MECH 5-10 GERMANY ELEC 1-2-5 GERMANY MECH 1-2-5 UK ELEC L1-50-20-10 ITALY MECH 500-500 N.Z. MECH 1-2 SPAIN MECH 100-500 JAPAN MECH 100-100 JAPAN MECH 100 PORT MECH 100-200 GREECE MECH 50-100 HUNGARY MECH 20-20 AUSTRIA MECH 5-10-10 AUSTRIA MECH 5-10 KOREA MECH 100-100 HONG KONG MECH 1-2 SWISS MECH 1-2-5 SWISS MECH 1-5 SWISS MECH 1-1-1 HOLLAND MECH 1-1 HOLLAND MECH 1-2.5-5 CANADA MECH .25-1 CANADA MECH .25-.25-1 NORWAY MECH 5-10 NORWAY MECH 10-5-20 NORWAY ELEC 5-10-20 DENMARK ELEC 1-5-10-20 AUSTRALIA MECH .20-1 AUSTRALIA MECH 1-2 AUSTRALIA ELEC .20-1-2-M1 FINLAND ELEC 1-5 FINLAND ELEC 5-1 BELGIUM MECH 20-20 BELGIUM ELEC 5-20-50 SWEDEN ELEC 1-5-10 SINGAPORE MECH 1-1 ITALY ELEC 500	SET ACCORDING TO COUNTRY DEFAULT	SETS THE COIN DOOR TYPE AND THE COIN UNITS FOR EACH CHUTE. SELECT ***CUSTOM*** FOR INDIVIDUAL DOOR TYPE CONFIGURATIONS AND CHUTE UNITS (SEE B4-02A THRU B4-02I).
B4-02A	1ST COIN CHUTE UNITS	0 - 65,535	0	THE NUMBER OF COIN UNITS USED FOR THE IST CHUTE.
B4-02B	2ND COIN CHUTE UNITS	0 - 65,535	0	THE NUMBER OF COIN UNITS USED FOR THE 2ND CHUTE.
B4-02C	3RD COIN CHUTE UNITS	0 - 65,535	0	THE NUMBER OF COIN UNITS USED FOR THE 3RD CHUTE.
B4-02D	4TH COIN CHUTE UNITS	0 - 65,535	0	THE NUMBER OF COIN UNITS USED FOR THE 4TH CHUTE.
B4-02E	CHUTE 1 TYPE	MECHANICAL, ELECTRICAL	MECHANICAL	SELECT THE CHUTE TYPE.
B4-02F	CHUTE 2 TYPE	MECHANICAL, ELECTRICAL	MECHANICAL	SELECT THE CHUTE TYPE
B4-02G	CHUTE 3 TYPE	MECHANICAL, ELECTRICAL	MECHANICAL	SELECT THE CHUTE TYPE
B4-02H	CHUTE 4 TYPE	MECHANICAL, ELECTRICAL	MECHANICAL	SELECT THE CHUTE TYPE
B4-02I	COIN METER UNITS	0 - 65,535	1	SELECT THE NUMBER OF COIN CHUTE UNITS THAT ARE **EQUIVALENT TO** ONE PULSE OF THE *SOFTWARE-CONTROLLED COIN METER #5 (NOT CURRENTLY IMPLEMENTED IN HARDWARE).

Proprietary and confidential information, not to be disclosed or copied without the express permission of CAPCOM® COIN-OP, INC.

B4: COINAGE ADJUSTMENTS (CONTINUED)

B4-03	COIN VALUE	NOT APPLICABLE	0.25	SETS THE MULTIPLIER (COIN VALUE) FOR DETERMINING COIN CHUTE TOTALS IN *A1: COLLECTION AUDITS*. DEFAULTS TO BASE VALUE AS SET IN *B4-01 : COINAGE ADJUSTMENT*
B4-04	SHOW CREDIT FRACTIONS	YES, NO	YES	DISPLAY FRACTIONAL CREDITS AS COINS ARE INSERTED (TYPICALLY USED IN COUNTRIES WHERE ONE COIN RESULTS IN LESS THAN ONE CREDIT).
B4-05+	ALLOW BUY-IN	YES, NO	YES	SELECT WHETHER BUY-INS ARE ALLOWED DURING THE GAME (UNLIMITED).
B4-05A	BUY-IN CREDITS	1/255 TO 255 CREDITS	1 CREDIT	DETERMINES THE NUMBER OF BUY-IN CREDITS REQUIRED TO CONTINUE THE GAME. EX. A GAME REQUIRES 50¢, OR ONE CREDIT, TO START. BUY-INS CAN NOW BE SET AT *LESS* OR *MORE* THAN THE ONE CREDIT REQUIREMENT, PERHAPS A 1/2 CREDIT (25¢).
B4-05B	MAX MUM BUY-INS	0 - 99	10	SETS THE MAXIMUM NUMBER OF BUY-INS ALLOWED DURING A GAME.
B4-06	MAXIMUM CREDITS	1 - 99	20	SETS THE MAXIMUM NUMBER OF CREDITS ALLOWED DURING A GAME.
B4-07	ENABLE CREDIT BONUSES	YES, NO	YES	ALLOW MULTIPLE COINS (YES) OR SINGLE COINS (NO) TO BE USED IN CALCULATING CREDIT BONUSES. EX. GAME PRICING IS ONE TOKEN PER PLAY, 2 TOKENS FOR 3 PLAYS. IF *YES* IS SELECTED, THE SECOND TOKEN WILL GIVE 3 CREDITS; IF *NO*, THE SECOND TOKEN WILL YIELD 2 CREDITS.

B5 : PASSWORD

AUDIT REF.	AUDIT NAME	RANGE	FACTORY SETTING	DESCRIPTION
B5-01+	PASSWORD	OFF, ON, CHANGE	OFF	SETS THE PASSWORD USED BY THE OPERATOR. SELECT ***CHANGE*** FOR A NEW OR REVISED PASSWORD; SELECT ***ON*** TO SET ADDITIONAL PASSWORD PROTECTION (SEE B5-01A,B). **CAUTION:** IF THE PASSWORD HAS BEEN SET **ON** AND CAN'T BE REMEMBERED BY THE OPERATOR, THE GAME MUST BE FACTORY RESET (SEE D7: FACTORY RESET). THIS ACTION DESTROYS ANY PREVIOUS AUDIT INFORMATION AND OPERATOR ADJUSTMENTS TO THE GAME.
B5-01A	HIDE EARNINGS	YES, NO	NO	ALLOW EARNINGS INFO (AUDITS MENU) TO APPEAR/NOT APPEAR ON THE DOT MATRIX DISPLAY.
B5-01B	PROTECT ADJUSTMENTS	YES, NO	NO	SELECT ***YES*** TO PROTECT OPERATOR-SET ADJUSTMENTS FROM RESET (D8: FACTORY RESET).
B5-01C	PROTECT AUDITS	YES, NO	NO	SELECT ***YES*** TO PROTECT OPERATOR-SET AUDITS FROM RESET (SEE D8: FACTORY RESET).

Proprietary and confidential information, not to be disclosed or copied without the express permission of CAPCOM® COIN-OP, INC.

B6 : ERRORS/INFO

AUDIT REF.	AUDIT NAME	RANGE	FACTORY SETTING	DESCRIPTION
B6-01	SWITCH ERRORS	REPORT ALL, DISABLE MOMENTARIES, DISABLE ALL	REPORT ALL	SETS THE OPTION TO DISPLAY OR HIDE ERROR MESSAGES ON-THE SCREEN DISPLAY.
B6-02	SWITCH INFO MSG	REPORT ALL, DISABLE MOMENTARIES, DISABLE ALL	REPORT ALL	SETS THE OPTION TO DISPLAY OR HIDE *INFO* MESSAGES ON-THE SCREEN DISPLAY.
B6-03	SOLENOID ERRORS	REPORT ALL, DISABLE MOMENTARIES, DISABLE ALL	REPORT ALL	SETS THE OPTION TO DISPLAY OR HIDE *ERROR* MESSAGES ON-THE SCREEN DISPLAY.
B6-04	SOLENOID INFO MSG	REPORT ALL, DISABLE MOMENTARIES, DISABLE ALL	REPORT ALL	SETS THE OPTION TO DISPLAY OR HIDE *INFO* MESSAGES ON-THE SCREEN DISPLAY.
B6-05	LAMP ERRORS	REPORT ALL, DISABLE MOMENTARIES, DISABLE ALL	REPORT ALL	SETS THE OPTION TO DISPLAY OR HIDE *ERROR* MESSAGES ON-THE SCREEN DISPLAY.
B6-06	LAMP INFO MSG	REPORT ALL, DISABLE MOMENTARIES, DISABLE ALL	REPORT ALL	SETS THE OPTION TO DISPLAY OR HIDE *INFO* MESSAGES ON THE SCREEN DISPLAY.

Proprietary and confidential information, not to be disclosed or copied without the express permission of CAPCOM® COIN-OP, INC.

C. DIAGNOSTICS

C1: STANDARD TESTS

C1- 01 : SWITCH TEST

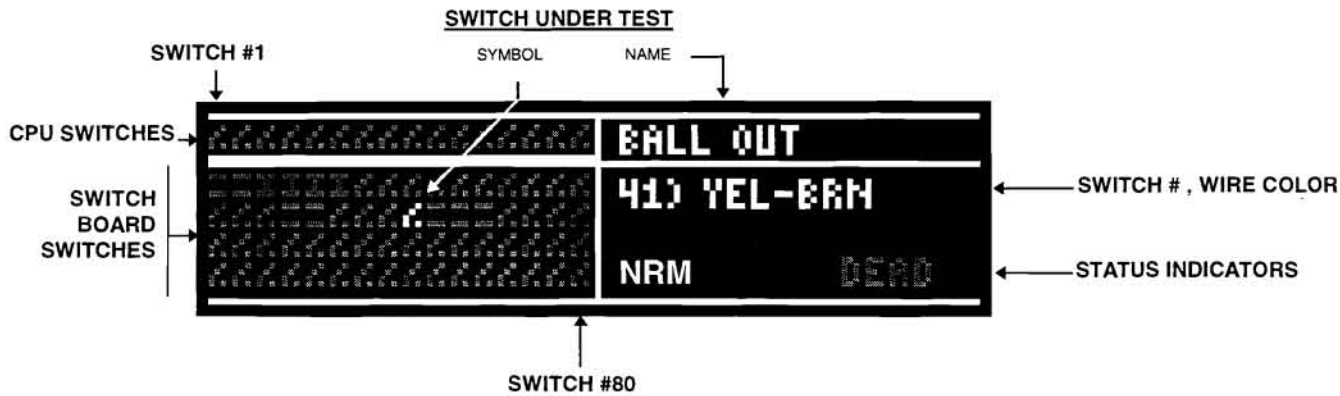

The Switch Test displays a graphical representation of the switch , indicating which switches are seen as open and which are seen as closed. Also shown is information about the switch under test (name, number, wire colc and status indicators). The status indicators, when highlighted, show:

NRM - Normal operation; no problems are detected;

DEAD Indicates when a switch has not been activated in past games.

The Switch icons are:

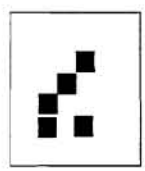
OPEN SWITCH

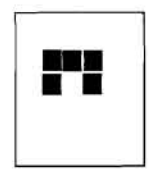
CLOSED SWITCH

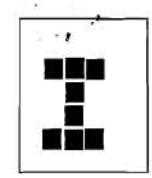
OPTO WITH VERTICAL BEAM OF LIGHT

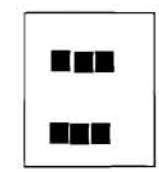
OPTO WITHOUT BEAM OF LIGHT (BLOCKED OPTO)

NOTE: If a status indicator is blinking, it is indicative of a problem area.

Proprietary and confidential information, not to be disclosed or copied without the express permission of CAPCOM® COIN-OP, INC.

C1- 02 : OPTO TEST

The Opto Test is used to verify opto operation by blinking the controlled lamps and flashers. The dot matrix display screen is similar to the Switch Test (C1-01) above, however, when selected, the following screen appears:

Open the backbox and remove connector J15 from the Power Board. Then, when verifying each opto, check that the opto icon does NOT have a vertical line (representing a "triggered" receiver condition). In this case, make sure that all balls are secure in a ball holding device (since infrared light can be reflected off the game ball) and re-test. If the opto continues to fail this test, repair/replace as required.

NOTE: Reconnect J15 at the Power Board after completing this test.

C1- 03 : SOLENOID TEST

CAUTION

THE FOLLOWING TEST SHOULD BE PERFORMED ONLY BY QUALIFIED SERVICE PERSONNEL.
TO START THE TEST, THE COIN DOOR MUST BE OPEN AND THE STEM OF THE 50V INTERLOCK SWITCH MUST BE PULLED-OUT (ENABLED).

The Solenoid Test will test solenoids, motors, and flashers on the game. The screen displays information on the name of the device, a representative icon for the device, wire colors, driver board connector & pin number, power board wire color, and status indicators (NRM, OFF). For each test, the device will be energized and the icon will pulse.

The status indicators, when highlighted, represent the following conditions:

NRM	Normal operation; no problems are detected;
OFF	A short circuit is detected. The device may be in a cooling-down period and will automatically enable itself after reaching the proper operating temperature;
OFF?	Momentary short circuit (e.g. at some point the device had been detected as shorted, although it may be fine now). This is a good way to detect intermittent problems.

Use the flipper buttons to cycle from solenoid-to-solenoid. Press both flipper buttons to exit the Solenoid Test.

NOTE: If an indicator is blinking, there is a software-detected problem with this device.

Proprietary and confidential information, not to be disclosed or copied without the express permission of CAPCOM® COIN-OP, INC.

C1- 04 : LAMP TEST

The Lamp Test will start all game lamps flashing. The flippers can then be used to get detailed information about any individual lamp. This information includes the lamp name and number, row and column information from the lamp matrix, its' wire colors, and an icon indicating whether the lamp is active.

The lamp's indicators report:

NRM = If BRIGHT, no electrical problems have been detected.

CONN = If this indicator is BRIGHT, an electrical connection is detected. If this indictor is dim, there is a break in the wiring to the lamp.

CONN? = At some point the device had been detected as not connected, although it may be fine now. This is a good way to find intermittent problems.

ROW.OFF = A row driver is disabled from a ROW or BULB short circuit -- The device was shorted and is now inactive (may be in a 15 second cool-down period).

ROW.OFF? = Indicates a momentary row short. At some point the device had been detected as shorted, although it may be fine now. This is a good way to find intermittent problems.

COLUMN = A column driver can be overheated and thermally shutdown, most likely from a column short-to-ground or an entire column without lamps (i.e. loose or disconnected column wire at the driver board or burned-out lamps).

COLUMN? = Indicates a momentary column problem. At some point the device had a column problem, although it may be fine now. This is a good way to find intermittent problems.

NOTE: If an indicator is blinking, this is the problem area. Use the flippers to cycle from lamp to lamp. Press both flipper buttons to exit the Lamp Test.

Proprietary and confidential information, not to be disclosed or copied without the express permission of CAPCOM® COIN-OP, INC.

ADDITIONAL NOTES ON LAMP INDICATORS:

CONN: A bright indicator shows that at least 1 bulb is connected and is lit. For 2 bulbs at a single location, both bulbs must be burned-out (or disconnected) before this indicator is made bright.

SERVICE TIP : Fix column problems *BEFORE* using this indicator to troubleshoot bulb problems.

ROW.OFF: A bright indicator reflects the drive is cooling from an unknown voltage short on the row side of a column/row matrix OR a short across the bulb. The "?"after this indicator helps to isolate either a bulb short or a row short. If all or multiple "?" are on the same row of the same matrix, then this would tend to indicate a row-short-to-power supply. **Row-shorts-to-ground are not detectable** (the only symptom is that all the bulbs in a particular row are extremely bright). If there is only one "?" in a row, then most likely a short exists at the bulb, socket, or terminals.

COLUMN: A bright indicator usually reflects a thermally-shutdown column driver caused by a short-to-ground condition, or all lamps in the column are burned-out, or a loose/broken column wire. A column shorted to a power source (i.e. any 50 volt supply) usually just burns-out all the bulbs in the column or blows a fuse.

WARNING: TO AVOID RISK OF PERSONAL INJURY, DO NOT TOUCH A COLUMN DRIVER DURING A THERMAL SHUTDOWN.

C1- 05 : DISPLAY TEST

The Display Test can assist the operator in checking the dot matrix display for proper illumination of individual pixel elements. It has six continuos test modes that move across the display:

1) A light diagonal bar illuminated against a dark background;
2) A light vertical bar illuminated against a dark background;
3) A light horizontal bar illuminated against a dark background;
4) A dark vertical bar illuminated against a light background;
5) A dark horizontal bar illuminated against a light background;
6) An intensity checker.

In the first five modes, use the flipper buttons to move the bar across the display. If you hold either flipper button "in" continuously, you will notice that the bar will run off the screen and the display will show the next (or previous) mode. The start button can be used at any time to change the intensity of the bar from normal to medium, dim, and off.

The sixth mode will light every pixel to full intensity. Pressing the flipper button will change the intensity to medium, dim, and off. After the sixth mode, the test cycles back to the first mode.

Proprietary and confidential information, not to be disclosed or copied without the express permission of CAPCOM® COIN-OP, INC.

Press both flippers to exit the Display Test.

C1- 06 : SOUND BOARD RESET

The Sound Board Test resets the sound board and causes it to report its powerup status. Press the start button to restart the test.

C1- 07 : SOUND BOARD MUSIC TEST

The Sound Board Music Test plays several samples of music which fully tests the capabilities of the sound board hardware. The selection of the tune and its' volume level can be changed by the use of the flippers and start button.

C1- 08 : SOL(ENOID) VOLTAGE

This test will measure and display signal strength from the power board (connector J3) to the CPU board (connector J2). The zero cross detection circuit should report the correct non-zero line frequency (top line of display) for this location . The second line of the display reports the flipper's 50 Volt A/D converter voltage to within ±2 volts along with the current percent tolerance.

CAUTION: If any of the following conditions exist, the message **"CHECK 50V INTERLOCK SW."** will be displayed:

1) the 50V coin door interlock switch is "off" (the stem is pushed-in instead of "out");
2) the 50V fuse (F6) on the Power Board is blown;
3) the connection from the Power Board to the CPU is disconnected;
4) a power circuit or cabling is not operating properly.

Proprietary and confidential information, not to be disclosed or copied without the express permission of CAPCOM® COIN-OP, INC.

Since the solenoid voltage is unregulated and unloaded at the time of this particular test, this measurement is an excellent indicator of the actual line voltage. The bottom line can display:

"SUPPLY WITHIN 10%" (10% is user-selected in Adjustment B1-13)
"SUPPLY IS HIGH"
"SUPPLY IS LOW"

The normal range of tolerance for the line voltage (not solenoid voltage) is -15% to +10%, for example, 120VAC can measure between 102VAC to 132VAC. The solenoid voltage is dependent upon the line voltage, and the transformer "taps" convert certain line voltages to a nominal non-loaded solenoid voltage of about 76 Volts. If your game is not within the 10% range, you might consider re-tapping the transformer to a high-line or low-line tap (depending if your solenoid voltage is high or low). The extra "cushion" of 5% (for the -15% tolerance) is highly recommended for temporary low- line conditions.

C1- 09 : TICKET DISPENSER TEST

NOTE: Before performing this test, return to the Menu System, Standard Adjustment B1-16, *TICKET DISPENSER*, and verify that the installed dispenser is configured properly. Ticket audit totals are not affected by this test.

Tickets should be loaded and ready to dispense. This test will check the operation of the ticket dispenser motor, notch switch, and meter.

When the test starts, the motor will try to dispense a ticket and increment the ticket meter. If successful, the message "DISPENSED" will appear on the display; if unsuccessful, an "ERROR" is reported to the display. Possible "ERROR" conditions are discussed in the Troubleshooting section of this manual. This test can be repeated at any time by pressing the "START" button.

NOTE: After servicing an "Out of Tickets" condition or a dispenser jam, you can either:
a) *Continue* dispensing tickets from the game-in-progress by closing the coin door, or
b) *Clear* dispenser memory by interrupting power to the game (off, then on).

C1- 10 : TOKEN DISPENSER TEST

NOTE: Before performing this test, return to the Menu System, Standard Adjustment B1-17, *TOKEN DISPENSER*, and verify that the installed dispenser is configured properly. Token audit totals are not affected by this test.

Tokens should be loaded and ready to dispense. This test will activate the dispenser solenoid and pulse the ticket meter. The operator must confirm that the actual number of tokens dispensed agrees with the number of test(s) performed (one token per test). This test will typically display a successful "DISPENSED" (no "ERROR" will be reported) since most dispenser solenoids lack provisions for feedback circuitry (switches).

Proprietary and confidential information, not to be disclosed or copied without the express permission of CAPCOM® COIN-OP, INC.

NOTE 1: For dispensers that are equipped with switch feedback, the test message "ERROR" will be reported to the display. Possible "ERROR" conditions are discussed in the Troubleshooting section of this manual. This test can be repeated at any time by pressing the "START" button.

NOTE 2: After servicing an "Out of Tokens" condition or a dispenser jam, you can either:
a) *Continue* dispensing tokens from the game-in-progress by closing the coin door, or
b) *Clear* dispenser memory by interrupting power to the game (off, then on).

C1- 11 : BURN-IN TEST

The Burn-In Test energizes all of the machine hardware in a sequenced pattern. All the solenoids are fired, motors run, and lamps flashed. The dot matrix display and sound system are also activated as well. This test is primarily intended for factory use to assure that all electronic and mechanical features are operating when the game leaves the factory.

To end the Burn-In test, press both flipper buttons at any time. Also, see the *Audit* section for the total cumulative time that Burn-In Tests have been run on the game.

C2: FEATURE TESTS

CAUTION

THE FOLLOWING TEST SHOULD BE PERFORMED ONLY BY QUALIFIED SERVICE PERSONNEL.
TO START THE TEST, THE COIN DOOR MUST BE OPEN AND THE STEM OF THE 50V INTERLOCK SWITCH MUST BE PULLED-OUT (ENABLED).

C2- 01 : CLEAR OUT BALLS

This test will eject all balls present in the game troughs. It cycles through all 3 ball troughs and highlights (on the display) the current switch being activated.

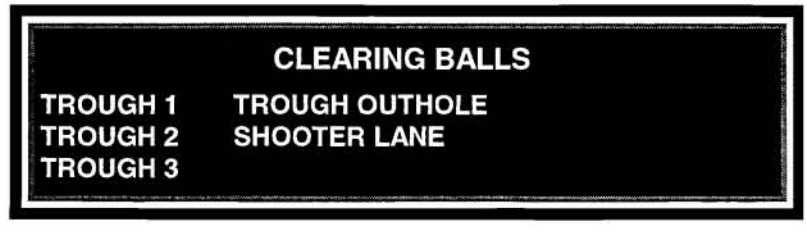

Proprietary and confidential information, not to be disclosed or copied without the express permission of CAPCOM® COIN-OP, INC.

If this test is started with no balls present in the troughs or re-tested after a previous attempt, the message *"BALL TROUGH IS NOW EMPTY"* will be displayed. Also, if the game is unable to eject a ball from any trough, the message *"BALL TROUGH PROBLEM SUSPECTED"* will be displayed.

C3: TROUBLESHOOTING

The Troubleshooting diagnostic is a shortcut tool to get to the games' troublespots as quickly and conveniently as possible. This diagnostic scans all the switches, solenoids, and lamps for problems and presents a summary of what was found. Use the flipper buttons to automatically step to the appropriate test for each error condition. The tests used (switch, lamp and solenoid) are described in Section C1, Standard Tests.

NOTE: The troubleshooting diagnostic continuously gathers and updates information, in real time, about switches, lamps and solenoids. A sound is made when any of this information changes. This allows the operator to make repairs or find loose connections in the game and check his/her results by viewing the display.

There are two categories of troubleshooting, Errors and Information. *Errors* are considered important to game play and should be fixed at the earliest opportunity. *Information* messages (for example, a lamp behind the backglass is burned-out) are considered less critical and can be serviced as part of a routine maintenance schedule. Errors and Information messages can also be selectively disabled from viewing by Adjustment B6, Errors/Info. Additionally, all Errors and Information messages can be cleared by the reset function D5, Clear Errors/Info.

NOTE: Refer to the previous individual tests (C1-01 to C1-04) for information on indicator status and troubleshooting tips.

ADDITIONAL NOTE: Individual momentaries for a lamp, switch, or solenoid are always "forgotten" when you leave this test.

Proprietary and confidential information, not to be disclosed or copied without the express permission of CAPCOM® COIN-OP, INC.

D. RESET FUNCTIONS

*D1: CLEAR COLLECTIONS

This function clears all Collection Audits (A1) and moves all Histories down one level in the collections history log (Example: Current audits become History 1 audits, History 1 audits become History 2 audits, etc.).

*D2: CLEAR AUDITS

This action clears all other audits, from A2: Earnings Audits to A7: Ball Time Histogram.

D3: CLEAR CREDITS

Reset the Credits counter to zero.

D4: CLEAR HIGH SCORE TO DATE (HSTD)

Used to reset the game's HSTD table based on the settings in Adjustments B1-05A: HSTD High Score and B1-05B: HSTD Last Score.

D5: CLEAR ERRORS/INFO

Clears all troubleshooting errors and info. Always use this after repair or replacement of PC boards.

*D6: CLEAR ADJUSTMENTS

Returns all B: Adjustments(6) to their factory-set defaults (A: Audits are not affected by this function).

D7: RESET REPLAY

Resets the replay score to meet the target replay percentage (see Adjustment B1-04A: Replay Percent).

D8: FACTORY RESET

Clears ALL audits and adjustments information and returns the game to the original factory default settings. The operator is prompted to select a country for which the locale, language, and coin door adjustments are set (default country is the *United States*, Adjustment B3-01).

***NOTE:** WHEN PASSWORD-PROTECTED, THESE FUNCTIONS **WILL NOT CLEAR**
(SEE SECTION B5 , *PASSWORD*)

Proprietary and confidential information, not to be disclosed or copied without the express permission of CAPCOM® COIN-OP, INC.

E. REPORTS

THEORY OF OPERATION

The Reports utility permits the operator the ability to "dump" all *Audits* and *Adjustments* data to a serial communications device, such as a printer or a laptop computer. A Report can be generated using one of the following methods:

1) Automatically, via the "Hot Plug" ("energized" serial port). When the "Hot Plug" method is used, the system software will automatically detect the presence of the printer when the coin door is opened and the printer cable is connected to the serial port of the Interface PCB. The Report will then start printing. The progress of the print job will be shown on the dot matrix display, along with any error messages. When a "Hot Plug" print job is successfully completed, all current audits data will be cleared, replay award levels reset, and the printout counter will be incremented. The operator must close the coin door and re-open it again to generate another "Hot Plug" Report.

2) Manually, through the Menu System using *E1: Custom Report* The operator can also elect to disable the "Hot Plug" method of reporting (see *E3-01B*: *Hotplug Custom Report*), and configure the printer/computer for mode of operation, communications protocol, and customization features of the report. When a "Custom" print job is successfully completed, the printout counter will be incremented and audits data and replay award levels will also be cleared/reset unless the operator elects otherwise (see *E2-01,02: Clear Collections, Reset Replay.*

CAUTION: The "Hot Plug" (serial port) is active when the coin door is opened. For a *Custom Report*, the printer plug must NOT be inserted in the serial port until *E1: Custom Report* is selected and the START button is pushed. Any attempt to generate a *Report* prior to this sequence will always result in a "Hot Plug" *Report.*

PRINTERS and COMPUTERS CURRENTLY SUPPORTED:

- O'Neil microFlash Receipt Printer;
- NSM Datapoint 3000 Printer/Recorder;
- Citizen Dot-Matrix Printer, Models IDP 560 or 562;
- Any serial printer supporting an ASCII format;
- Any desktop/laptop computer capable of supporting an ASCII format.

Proprietary and confidential information, not to be disclosed or copied without the express permission of CAPCOM® COIN-OP, INC.

PRINTER/COMPUTER CONFIGURATION AND INSTALLATION

I. O'Neil microFlash Receipt Printer

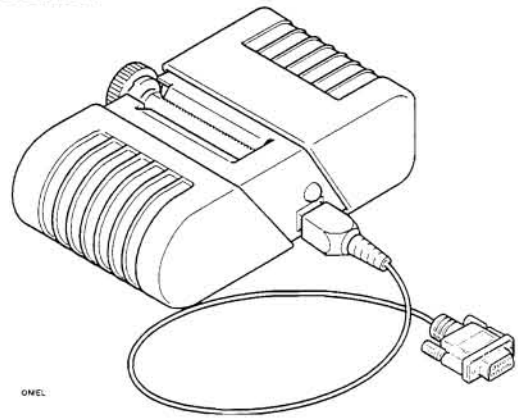

NOTE: If your game is not equipped with a printer interface PCB, contact your local CAPCOM® distributor for Field Kit K-008-2. Install all necessary hardware and cables using the enclosed instructions.

1) Using the O'Neil Configuration Utility, open to the following sub-menus and configure the printer for the following settings:

a. *Communication Parameters-*
PORT = COM1;
BAUD RATE = 19200;
DATA BITS = 8;
PARITY = NONE;
HANDSHAKING = XON/XOFF.

b. *Printer Options* -
BEEPER = ON;
TIME-OUT = 10 SECONDS;
INFRARED CRC = OFF.

c. *Paper, Fonts, and Graphics Options* -
SET PER USER REQUIREMENTS.

2) Configure the games' *Reports* software as follows:
E3 - 01+: Select O'NEIL MICROFLASH;
E2 -01 thru 17: Select per user requirements for a *Custom Report* (optional).

3) Determine the method of generating the Report. For a "Hot Plug" Report, connect the DB9 female connector (supplied with the printer) to the DB9 male connector now located on the switch bracket inside the coin door. The *Report* will start printing after this connection is made. The *Report* can be repeated, if necessary, by removing the cable, closing and re-opening the coin door, and re-installing the printer cable to the serial port.

4) For a *Custom Report*, scroll through the Menu System to *E1 : Custom Report*. Press the START button and install the printer cable to the serial port . The Custom Report will now begin printing. Remove the printer cable when the print job is finished and close the coin door.

Proprietary and confidential information, not to be disclosed or copied without the express permission of CAPCOM® COIN-OP, INC.

II. NSM Datapoint 3000 Printer

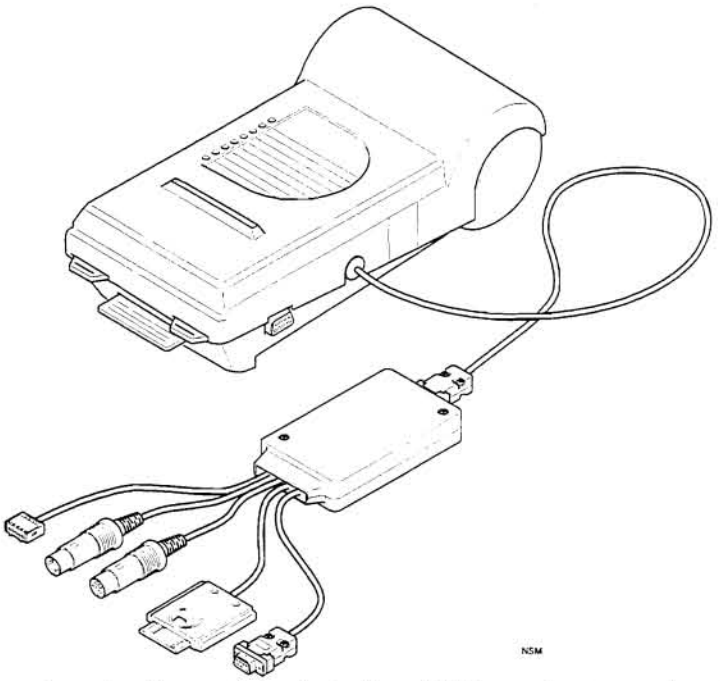

NOTE: If your game is not equipped with a printer interface PCB, contact your local CAPCOM® distributor for Field Kit K-008-5. Install all necessary hardware and cables using the enclosed instructions.

1) Configure the games' *Reports* software as follows:
E3 - 01+: Select NSM DATAPRINTER, PRINT;
E2 -01 thru 17: Select per user requirements for a *Custom Report* (optional).

2) Check that the NSM Memory Card is fully inserted into its' slot.

3) Determine the method of generating the Report. For a "Hot Plug" Report, connect the DB9 female connector (supplied with the printer) to the DB9 male connector now located on the switch bracket inside the coin door. The Report should start printing automatically. The *Report* will start printing after this connection is made. The *Report* can be repeated, if necessary, by removing the cable, closing and re-opening the coin door, and re-installing the printer cable to the serial port.

4) For a *Custom Report*, scroll through the Menu System to *E1 : Custom Report*. Press the START button and install the printer cable to the serial port . The Custom Report will now begin printing. Remove the printer cable when the print job is finished and close the coin door.

III. NSM Datapoint 3000 Recorder

Same as the NSM Datapoint 3000 Printer above except that the printer is configured through *Reports* software as a memory storage device. The *Reports* data is saved to the NSM memory card and downloaded to a computer through the use of NSM-compatible software, such as DATACONTACT 3000©.

You must configure the games' *REPORTS* software, in section E3 - 01+, for **NSM DATAPRINTER, SAVE.** Follow the above NSM Printer steps 2 through 4 to capture a *Report* to the memory card.

Proprietary and confidential information, not to be disclosed or copied without the express permission of CAPCOM® COIN-OP, INC.

IV. Citizen Dot-Matrix Printer, Models IDP 560 or 562

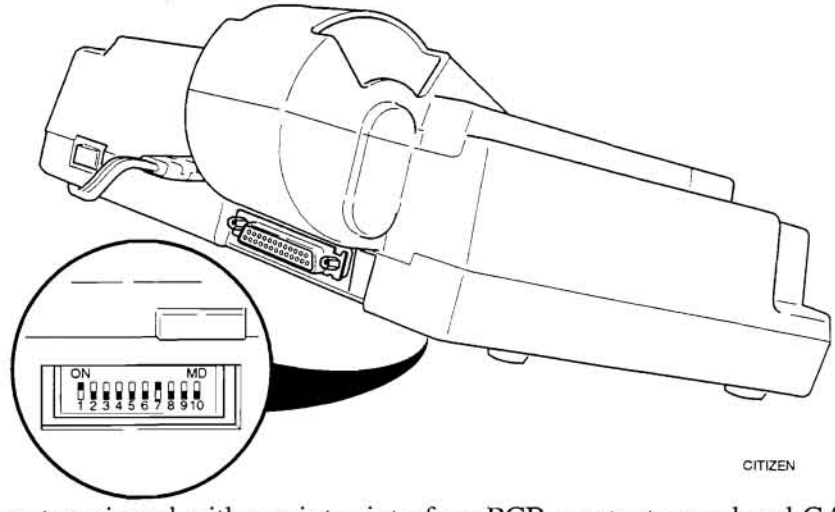

NOTE: If your game is not equipped with a printer interface PCB, contact your local CAPCOM® distributor for Field Kit K-008-2. Install all necessary hardware and cables using the enclosed instructions.

1) Set the printer's DIP switches as follows:

DIP SWITCH #									
1	2	3	4	5	6	7	8	9	10
ON	OFF	OFF	OFF	OFF	OFF	ON	OFF	OFF	OFF

2) Configure the games' *Reports* software as follows:
E3 - 01+: Select CITIZEN 560/562;
E2 -01 thru 17: Select per user requirements for a *Custom Report* (optional).

3) Determine the method of generating the Report. For a "Hot Plug" Report, obtain a standard serial printer cable (purchase locally) with DB25 male/ DB9 female connector leads. Connect the DB25 male connector to the printer I/O port and attach the DB9 female connector to the male connector now located on the switch bracket inside the coin door. The Report should start printing automatically. The *Report* will start printing after this connection is made. The *Report* can be repeated, if necessary, by removing the cable, closing and re-opening the coin door, and re-installing the printer cable to the serial port.

4) For a *Custom Report*, scroll through the Menu System to *E1 : Custom Report*. Press the START button and install the printer cable (as described above) to the serial port . The Custom Report will now begin printing. Remove the printer cable when the print job is finished and close the coin door.

V. Generic ASCII

NOTE: If your game is not equipped with a printer interface PCB, contact your local CAPCOM® distributor for Field Kit K-008-2. Install all necessary hardware and cables using the enclosed instructions.

Proprietary and confidential information, not to be disclosed or copied without the express permission of CAPCOM® COIN-OP, INC.

1) Set the printer/computer serial port to receive data in the following format:

BAUD RATE = 19200;	STOP BIT(S) = 1;
DATA BITS = 8;	FLOW CONTROL (HANDSHAKING) = CTS and/or
PARITY = NONE;	XON/XOFF

2) Configure the games' REPORTS software as follows:

E3 - 01+: Select GENERIC ASCII;

E3 - 02+: Select DELIMITED if data is used for importation into a spreadsheet program, such as Microsoft® Excel.

E2 - 01 thru 17: Select per user requirements for a *Custom Report* (optional).

3a) For a printer, determine the method of generating the Report. For a "Hot Plug" Report, obtain a standard serial printer cable (purchase locally) with DB25 male/ DB9 female connector leads. Connect the DB25 male connector to the printer I/O port and attach the DB9 female connector to the male connector now located on the switch bracket inside the coin door. The Report should start printing after this connection is made. The *Report* can be repeated, if necessary, by removing the cable, closing and re-opening the coin door, and re-installing the printer cable to the serial port.

For a *Custom Report*, scroll through the Menu System to *E1 : Custom Report*. Press the START button and install the printer cable to the serial port . The Custom Report will now begin printing. Remove the printer cable when print job is finished and close the coin door.

3b) For computers, the pinball game is configured as a data terminal device (DTE) and the receiver is assumed to be a communications device (DCE). This configuration normally requires the use of a null modem cable with DB9 female and DB9/DB25 female terminations. Connect the DB9/DB25 female connector to the computer serial port (COM1 or COM2).

Prepare the computer to receive the ASCII text by opening to a serial port (modem) capture program, such as PROCOMM PLUS® or Microsoft® Windows TERMINAL (look under Program Manager, Accessories Group). Scroll through the Menu System to *E1 : Custom Report*. and press the START button. Connect the DB9 female connector to the male connector now located on the switch bracket inside the coin door. The Report should begin downloading to the computer terminal. Remove the printer/computer cable when the job is finished and close the coin door.

E1: Custom Report

The *Custom Report* is an operator-defined report which will be generated according to the settings defined in *E2: Custom Report Setup*. For printing a *Custom Report*, the operator must scroll through the Menu System to *E1 : Custom Report* and press the START button. The printer cable should now be connected to the serial port. The *Custom Report* will begin printing. Remove the printer cable when the print the job is finished and close the coin door.

E2 Custom Report Setup

This menu is used to configure the *Custom Report*. Each device, as described in *Printer/Computer Configuration and Installation,* is pre-configured according to the settings in *E3-01: Install Device.* The user can also customize the Report according to the following table:

Proprietary and confidential information, not to be disclosed or copied without the express permission of CAPCOM® COIN-OP, INC.

REF.	NAME	RANGE	*INSTALLED DEVICE* SETTINGS O'NEIL	NSM-PRINT	NSM- SAVE	CITIZEN	GENERIC	DESCRIPTION
E2-01	CLEAR COLLECTIONS	NO, LEAVE COLLECTIONS YES, WHILE PRINTING	YES	YES	YES	YES	YES	SELECT WHETHER *CURRENT AUDITS* SHOULD BE CLEARED AFTER THE PRINT JOB IS COMPLETE.
E2-02	RESET REPLAY	NO, LEAVE REPLAY YES, WHILE PRINTING	YES	YES	YES	YES	YES	SELECT WHETHER *REPLAY AWARDS* SHOULD BE CLEARED AFTER THE PRINT JOB IS COMPLETE.
E2-03+	COLLECTION AUDITS	YES, NO	YES	NO	NO	YES	YES	SELECT WHETHER *COLLECTION AUDITS* SHOULD APPEAR ON THE REPORT. IF **YES**, EACH *COLLECTION AUDIT* IS SELECTED INDIVIDUALLY (E3-03A THROUGH E3-03D) FOR THE REPORT.
E2-03A	CURRENT AUDITS	YES, NO	YES	NO	NO	YES	YES	SHOULD *CURRENT AUDITS* APPEAR ON THE REPORT?
E2-03B	AUDIT HISTORY 1	YES, NO	NO	NO	NO	NO	NO	SHOULD *AUDIT HISTORY 1* APPEAR ON THE REPORT?
E2-03C	AUDIT HISTORY 2	YES, NO	NO	NO	NO	NO	NO	SHOULD *AUDIT HISTORY 2* APPEAR ON THE REPORT?
E2-03D	AUDIT HISTORY 3	YES, NO	NO	NO	NO	NO	NO	SHOULD *AUDIT HISTORY 3* APPEAR ON THE REPORT?
E2-04	EARNINGS AUDITS	YES, NO	YES	NO	NO	YES	YES	SHOULD *EARNINGS AUDITS* APPEAR ON THE REPORT?
E2-05	STANDARD AUDITS	YES, NO	YES	NO	NO	YES	YES	SHOULD *STANDARD AUDITS* APPEAR ON THE REPORT?
E2-06	FEATURE AUDITS	YES, NO	YES	NO	NO	YES	YES	SHOULD *FEATURE AUDITS* APPEAR ON THE REPORT?
E2-07	STANDARD ADJUSTMENTS	YES, NO	NO	NO	NO	NO	NO	SHOULD *STANDARD ADJUSTMENTS* APPEAR ON THE REPORT?
E2-08	GAME ADJUSTMENTS	YES, NO	NO	NO	NO	NO	NO	SHOULD *GAME ADJUSTMENTS* APPEAR ON THE REPORT?
E2-09	LOCALE ADJUSTMENTS	YES, NO	NO	NO	NO	NO	NO	SHOULD *LOCALE ADJUSTMENTS* APPEAR ON THE REPORT?
E2-10	PASSWORD ADJUSTMENTS	YES, NO	NO	NO	NO	NO	NO	SHOULD *PASSWORD ADJUSTMENTS* APPEAR ON THE REPORT?
E2-11	ERROR/INFO ADJUSTMENTS	YES, NO	NO	NO	NO	NO	NO	SHOULD *ERROR/INFO ADJUSTMENTS* APPEAR ON THE REPORT?
E2-12	COINAGE ADJUSTMENTS	YES, NO	NO	NO	NO	NO	NO	SHOULD *COINAGE ADJUSTMENTS* APPEAR ON THE REPORT?
E2-13	REPORT SETTINGS	YES, NO	NO	NO	NO	NO	NO	SHOULD *REPORT SETTINGS* APPEAR ON THE REPORT?
E2-14	DEVICE SETTINGS	YES, NO	NO	NO	NO	NO	NO	SHOULD *DEVICE SETTINGS* APPEAR ON THE REPORT?
E2-15	GAME TIME HISTOGRAMS	YES, NO	NO	NO	NO	NO	NO	SHOULD *GAME TIME HISTOGRAMS* APPEAR ON THE REPORT?
E2-16	SCORE HISTOGRAMS	YES, NO	NO	NO	NO	NO	NO	SHOULD *SCORE HISTOGRAMS* APPEAR ON THE REPORT?
E2-17	BALL TIME HISTOGRAMS	YES, NO	NO	NO	NO	NO	NO	SHOULD *BALL TIME HISTOGRAMS* APPEAR ON THE REPORT?
*E2-18	REDEMPTION ADJUSTMENTS	NO, YES	NO	NO	NO	NO	NO	SELECT WHETHER *REDEMPTION ADJUSTMENTS* (F1) SHOULD APPEAR ON THE REPORT.
*E2-19	REDEMPTION PERCENTAGING	NO, YES	NO	NO	NO	NO	NO	SELECT WHETHER *REDEMPTION PERCENTAGING* (F2) SHOULD APPEAR ON THE REPORT.
*E2-20	REDEMPTION AUDITS	NO, YES	NO	NO	NO	NO	NO	SELECT WHETHER *REDEMPTION AUDITS* (F3) SHOULD APPEAR ON THE REPORT.

* NOTE: NOT AVAILABLE IN ALL VERSIONS OF SOFTWARE

Proprietary and confidential information, not to be disclosed or copied without the express permission of CAPCOM® COIN-OP, INC.

E3: Device Setup

This menu is used to configure the serial communications between the game and the output device. Each device, as described in *Printer/Computer Configuration and Installation,* is pre-configured at the factory according to the country setting of the game (see *B3 : Locale Adjustments).* In the chart below, the County Settings are described as follows:

I - used as the factory default for the U.S. and all other countries other than France and Germany;
II - used as the factory default for Germany;
III - optional configuration (not used as the factory default for any specific country);
IV - used as the factory default for France;
V - optional configuration (not used as the factory default for any specific country).

The user can also customize a device according to the following table:

REF.	NAME	RANGE	COUNTRY SETTING I.	II.	III.	IV.	V.	DESCRIPTION
E3-01+	INSTALL DEVICE	CUSTOM GENERIC ASCII O'NEIL MICROFLASH NSM DATAPRINTER, PRINT NSM DATAPRINTER, SAVE CITIZEN 560/562	O'NEIL	NSM-PRINT	NSM-SAVE	CITIZEN	GENERIC	SELECT THE TYPE OF DEVICE CONNECTED TO THE SERIAL PORT. IF *CUSTOM* IS SELECTED, ADDITIONAL PRINTER SETTINGS (E3-01A THROUGH E3-01K) MUST BE SELECTED.
E3-01A	DEVICE TYPE	GENERIC ASCII O'NEIL MICROFLASH NSM DATAPRINTER CITIZEN 560/562	O'NEIL	NSM-	NSM-	CITIZEN	GENERIC	SELECT THE TYPE OF DEVICE CONNECTED TO THE SERIAL PORT.
E3-01B	HOTPLUG CUSTOM REPORT	YES, NO	YES	YES	YES	YES	YES	SELECT WHETHER TO ENABLE (YES) O DISABLE (NO) *CUSTOM REPORTS* FRO THE MAIN MENU.
E3-01C	HOTPLUG QUERY	NONE 3 ASCII NULLS ASCII DC1	3 ASCII NULLS	NONE	NONE	ASCII DC1	NONE	SELECT THE INITIALIZATION STRING FOR YOUR PRINTER AFTER THE CONNECTION IS MADE ACTIVE.
E3-01D	HOT PLUG RESPONSE	NONE CTS ACTIVE DSR ACTIVE	CTS	CTS	CTS	CTS	CTS	SELECT WHETHER A HARDWARE HANDSHAKE IS REQUIRED.
E3-01E	SAVE REPORT	YES, NO	NO	NO	YES	NO	NO	SELECT WHETHER TO SAVE THE REPORT TO PRINTER MEMORY (IF SO EQUIPPED).
E3-01F	BAUD RATE	300, 600, 1200, 2400, 4800, 9600,19200	19200	9600	9600	9600	19200	SELECT THE BAUD RATE OF THE SERIA PORT. **NOTE:** ONLY 8N1 (8-BIT, NO PARITY, 1 STOP BIT) IS SUPPORTED.
E3-01G	END OF LINE	CR, LF, CR & LF	CR & LF	CR & LF	CR & LF	CR & LF	CR & LF	SELECT THE END OF LINE (EOL) ASCII CHARACTERS TO BE USED: CR- CARRIAGE RETURN LF-LINE FEED
E3-01H	CHARACTERS PER LINE	24 TO 80	42	24	24	40	80	SELECT THE MAXIMUM NUMBER OF CHARACTERS PER LINE OF PRINT.
E3-01I	RS232 CTS HANDSHAKE	YES, NO	NO	NO	YES	YES	YES	SELECT WHETHER A RS232 CTS HANDSHAKE IS REQUIRED BY THE PRINTER DEVICE.
E3-01J	XON/XOFF HANDSHAKE	YES, NO	YES	NO	NO	NO	YES	SELECT WHETHER AN ASCII HANDSHAKE (XON/XOFF) IS REQUIRED BY THE PRINTER DEVICE.
E3-01K	RS232 DSR HANDSHAKE	YES, NO	NO	NO	NO	NO	NO	SELECT WHETHER A RS232 DSR HANDSHAKE IS REQUIRED BY THE PRINTER DEVICE.
E3-01L	EOL/CTS HANDSHAKE	YES, NO	NO	YES	NO	NO	NO	SELECT WHETHER A COMBINATION OF EOL & CTS SIGNALS ARE REQUIRED BY THE PRINTER DEVICE.

Proprietary and confidential information, not to be disclosed or copied without the express permission of CAPCOM® COIN-OP, INC.

AUDIT REF.	AUDIT NAME	RANGE	FACTORY SETTING					DESCRIPTION
E3-02+	OUTPUT FORMAT	FORMATTED, DELIMITED	FORM.	FORM.	FORM.	FORM.	FORM.	SELECT THE FORMAT FOR DATA OUTPUT. *DELIMITED* (TEXT) OUTPUT WILL GENERALLY BE CAPTURED BY A TERMINAL SOFTWARE PACKAGE AND IMPORTED INTO A SPREADSHEET APPLICATION. IF *DELIMITED* IS CHOSE ADDITIONAL CRITERIA (E3-02 A,B) MUS BE SELECTED. *FORMATTED* DATA IS IN A PRINTER-READY, READABLE USER FORMAT, SUCH AS SEEN ON A RECEIP
E3-02A	DELIMITER	TAB SPACE COMMA SEMI-COLON	TAB	TAB	TAB	TAB	TAB	SELECT THE DELIMITER TO BE INSERTED BETWEEN THE 3 FIELDS (TITLE, VALUE, PERCENTAGE) OF THE REPORT.
E3-02B	TEXT QUALIFIER	DOUBLE QUOTE SINGLE QUOTE	DOUBL	DOUBL	DOUBL	DOUBL	DOUBL	SPECIFY THE BEGINNING AND ENDING CHARACTER OF A FIELD.

E4: Adjustments Report

Generates a complete listing of ALL of the games' adjustments information. Any sensitive adjustments which are password-protected will not be shown on the report (only the title of the adjustment will appear with the message "PASSWORD PROTECTED"). This report can only be generated through the Menu System (see *E2-01: Custom Report*).

E5: Audits Report

Generates a complete listing of ALL of the games' audit information. Any sensitive audits which are password protected will not be shown on the report (only the title of the audit will appear with the message "PASSWORD PROTECTED"). This report can only be generated through the Menu System (see *E2-01: Custom Report*).

STATUS MESSAGES

NOTE: All of the following Status Messages are shown on the dot matrix display and do not appear on the printed report:

1) **PLEASE DISCONNECT PRINTER** - This message appears after an automatic report has been completed using the "Hot Plug" method.

2) **SEARCHING FOR PRINTER... -** This message appears at the beginning of each print job.

3) **ONE MOMENT, PRINTING <type> -** This message appears during a print job where <type> is the title or the section currently being printed.

4) **ONE MOMENT, PRINTING ALL ADJUSTMENTS, <type> -** This message appears during the Adjustments Report where <type> is the title of the section currently being printed.

5) **ONE MOMENT, PRINTING ALL AUDITS, <type> -** This message appears during the Audits Report where <type> is the title of the section currently being printed.

Proprietary and confidential information, not to be disclosed or copied without the express permission of CAPCOM® COIN-OP, INC.

6) **ONE MOMENT, PRINTING CUSTOM REPORT, <type> -** This message appears during the Custom Report where <type> is the title of the section currently being printed.

7) **PRINT JOB COMPLETE -** This message appears after the completion of the current print job.

8) **PRINT JOB CANCELED -** This message appears when the operator cancels a print job in progress by pressing both flippers simultaneously.

9) **RESET COLLECTION AUDITS COMPLETE -** This message appears after the *COLLECTIONS* Audits have been cleared.

10) **RESET REPLAY PERCENTAGE COMPLETE -** This message appears after the replay setting has been changed to the recommended settings.

ERROR MESSAGES

NOTE: All of the following Error Messages are shown on the dot matrix display and do not appear on the printed report:

1) **ERROR: PRINTER NOT RESPONDING, CHECK CONNECTION AND TRY AGAIN -** This message appears after a print job is activated and the system is not able to detect the presence of a printer device. Check the printer cable for a loose connection and verify that it is the correct type of serial cable.

2) **ERROR: PRINT JOB INTERRUPTED, CHECK PRINTER AND TRY AGAIN -** This message will appear during a print job if the printer cable becomes disconnected, the printer goes off-line or runs out of paper, or an undetermined error occurs.

3) **PLEASE DISCONNECT PRINTER -** This message will appear after one of the above error messages was previously displayed and the re-connection attempt was unsuccessful. You must unplug the printer cable to remove the message from the display and return to the System Menu.

Proprietary and confidential information, not to be disclosed or copied without the express permission of CAPCOM® COIN-OP, INC.

F. REDEMPTION
(NOT AVAILABLE IN ALL VERSIONS OF SOFTWARE)

DESCRIPTION

The Redemption Menu is used in configuring the game for a redemption mode of operation when the game is equipped with an optional ticket or token dispenser . The redemption mode has five levels of scoring, payout, mechanism selection (ticket and/or token dispenser), and percentaging. The number and type of prizes (tickets, tokens, free credits, extra balls) that are awarded are operator adjustable and can be set for increasing levels of scoring difficulty. Prizes are awarded incrementally during the game after each scoring level is reached by the player. The player must also score within a preset time limit. After the timer expires, the current game will continue but the dispenser is disabled and prizes are no longer awarded.

F1 : ADJUSTMENTS

AUDIT REF.	AUDIT NAME	RANGE	FACTORY SETTING	DESCRIPTION
F1-01+	REDEMPTION MODE	ON, OFF	OFF	SELECT WHETHER GAME OPERATES IN REDEMPTION MODE (ON).
F1-01A	SCORE 1	0 - 4,000,000	50,000,000	SET THE FIRST LEVEL OF SCORING THAT WILL DISPENSE A PRIZE(S).
F1-01B	PAYOUT 1	0 - 100	1	SET THE AMOUNT OF PRIZE(S) TO BE AWARDED WHEN REACHING A LEVEL 1 SCORE.
F1-01C	MECHANISM 1	TOKEN, TICKET, CREDIT, XBALL	TOKEN	SELECT THE TYPE OF AWARD TO BE ISSUED WHEN REACHING A LEVEL 1 SCORE.
F1-01D	PERCENTAGE 1	1 - 99	40	SET THE "IDEAL" PERCENTAGE OF GAMES THAT SHOULD REACH A LEVEL 1 SCORE. WHEN A HISTORY OF GAME SCORES HAS BEEN ACCUMULATED, THIS PERCENTAGE WILL THEN BE USED IN DETERMINING A "SUGGESTED" LEVEL 1 SCORE (SEE F2, *PERCENTAGING*).
F1-01E	SCORE 2	0 - 4,000,000	100,000,000	SET THE SECOND LEVEL OF SCORING THAT WILL DISPENSE A PRIZE(S).
F1-01F	PAYOUT 2	0 - 100	3	SET THE AMOUNT OF PRIZE(S) TO BE AWARDED WHEN REACHING A LEVEL 3 SCORE.
F1-01G	MECHANISM 2	TOKEN, TICKET, CREDIT, XBALL	TOKEN	SELECT THE TYPE OF AWARD TO BE ISSUED WHEN REACHING A LEVEL 2 SCORE.
F1-01H	PERCENTAGE 2	1 - 99	20	SET THE "IDEAL" PERCENTAGE OF GAMES THAT SHOULD REACH A LEVEL 2 SCORE WHEN A HISTORY OF GAME SCORES HAS BEEN ACCUMULATED, THIS PERCENTAGE WILL THEN BE USED IN DETERMINING A "SUGGESTED" LEVEL 2 SCORE (SEE F2, *PERCENTAGING*).
F1-01I	SCORE 3	0 - 4,000,000	200,000,000	SET THE THIRD LEVEL OF SCORING THAT WILL DISPENSE A PRIZE(S).
F1-01J	PAYOUT 3	0 - 100	6	SET THE AMOUNT OF PRIZE(S) TO BE AWARDED WHEN REACHING A LEVEL 3 SCORE.
F1-01K	MECHANISM 3	TOKEN, TICKET, CREDIT, XBALL	TOKEN	SELECT THE TYPE OF AWARD TO BE ISSUED WHEN REACHING A LEVEL 3 SCORE.
F1-01L	PERCENTAGE 3	1 - 99	10	SET THE "IDEAL" PERCENTAGE OF GAMES THAT SHOULD REACH A LEVEL 3 SCORE. WHEN A HISTORY OF GAME SCORES HAS BEEN ACCUMULATED, THIS PERCENTAGE WILL THEN BE USED IN DETERMINING A "SUGGESTED" LEVEL 3 SCORE (SEE F2, *PERCENTAGING*).

Proprietary and confidential information, not to be disclosed or copied without the express permission of CAPCOM® COIN-OP, INC.

F1 : ADJUSTMENTS (CONTINUED)

F1-01M	SCORE 4	0 - 4,000,000	300,000,000	SET THE FOURTH LEVEL OF SCORING THAT WILL DISPENSE A PRIZE(S).
F1-01N	PAYOUT 4	0 - 100	10	SET THE AMOUNT OF PRIZE(S) TO BE AWARDED WHEN REACHING A LEVEL 4 SCORE.
F1-01O	MECHANISM 4	TOKEN, TICKET, CREDIT, XBALL	TOKEN	SELECT THE TYPE OF AWARD TO BE ISSUED WHEN REACHING A LEVEL 4 SCORE.
F1-01P	PERCENTAGE 4	1 - 99	5	SET THE "IDEAL" PERCENTAGE OF GAMES THAT SHOULD REACH A LEVEL 4 SCORE. WHEN A HISTORY OF GAME SCORES HAS BEEN ACCUMULATED, THIS PERCENTAGE WILL THEN BE USED IN DETERMINING A "SUGGESTED" LEVEL 4 SCORE (SEE F2, *PERCENTAGING*).
F1-01Q	SCORE 5	0 - 4,000,000	400,000,000	SET THE FIFTH LEVEL OF SCORING THAT WILL DISPENSE A PRIZE(S).
F1-01R	PAYOUT 5	0 - 100	1	SET THE AMOUNT OF PRIZE(S) TO BE AWARDED WHEN REACHING A LEVEL 5 SCORE.
F1-01S	MECHANISM 5	TOKEN, TICKET, CREDIT, XBALL	TICKET	SELECT THE TYPE OF AWARD TO BE ISSUED WHEN REACHING A LEVEL 5 SCORE.
F1-01T	PERCENTAGE 5	1 - 99	1	SET THE "IDEAL" PERCENTAGE OF GAMES TO REACH LEVEL 5 SCORING. WHEN A HISTORY OF GAME SCORES HAS BEEN ACCUMULATED, THIS PERCENTAGE WILL THEN BE USED IN DETERMINING A "SUGGESTED" LEVEL 5 SCORE (SEE F2, *PERCENTAGING*).
F1-01U	TIMER	10 - 300 SECONDS	200 SECONDS	SET THE AMOUNT OF TIME ALLOWED FOR REACHING SCORING LEVELS 1 -5.

F2 : PERCENTAGING

The Percentaging menu suggests to the operator a recommended scoring level that will better approximate the "target replay" percentage as set forth in F1, *Adjustments*. When selected, the following screen appears:

To accept the recommended new score level, press the START button. To cycle through the remaining score levels, press either FLIPPER button. To cancel, back-up, or restore the original setting, press both FLIPPER buttons simultaneously.

Proprietary and confidential information, not to be disclosed or copied without the express permission of CAPCOM® COIN-OP, INC.

F3 : AUDITS

The Audits menu will display awards information accumulated from previous games. A sample Audits screen is shown:

To cycle through the remaining award levels, press either FLIPPER button. To cancel or back-up to a previous menu, press both FLIPPER buttons simultaneously.

F4 : CLEAR AUDITS

Clears Totals and Percentaging values from the above F3, *AUDITS.*

F5 : COUNT TOKENS

NOTE: This test is intended only for token dispensers equipped with a token switch. **Prior to starting this test, remove all existing tokens from the collection drawer (bin) in order to prevent a backup of tokens into the dispenser mechanism.**

This utility will start emptying the token dispenser of its' remaining tokens while counting each token as it exits. The token count will be continually displayed to the screen.

Proprietary and confidential information, not to be disclosed or copied without the express permission of CAPCOM® COIN-OP, INC.

CABINET AND BACKBOX IDENTIFICATION

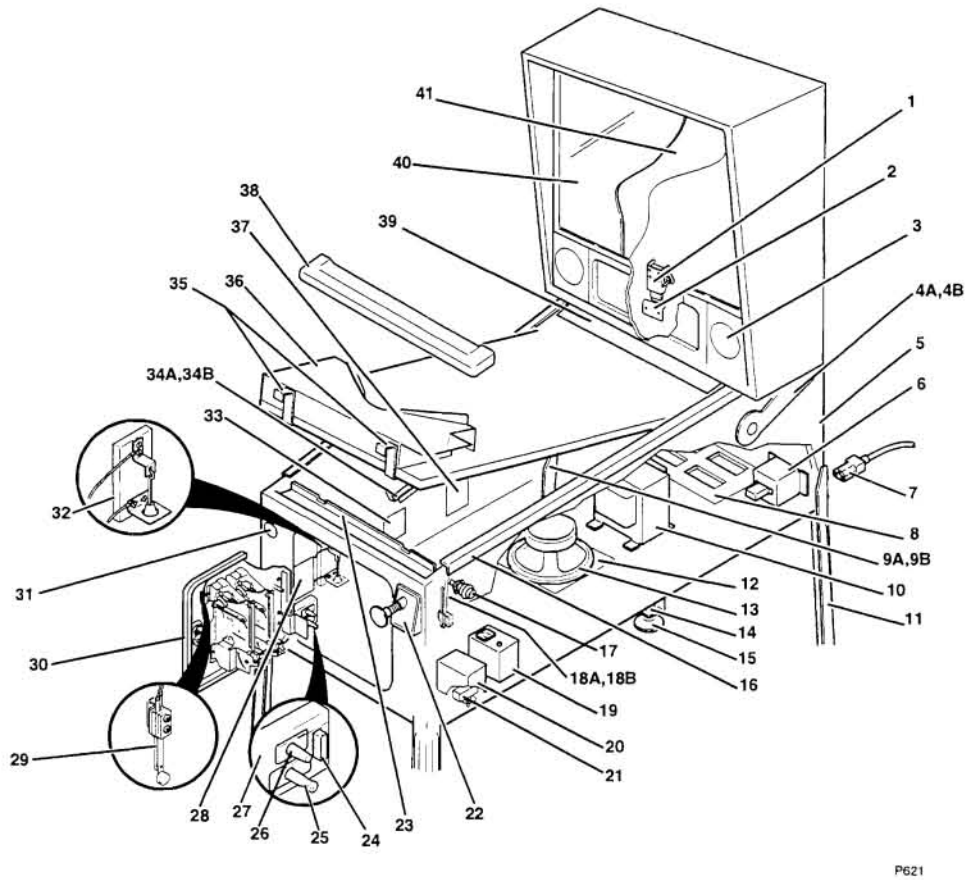

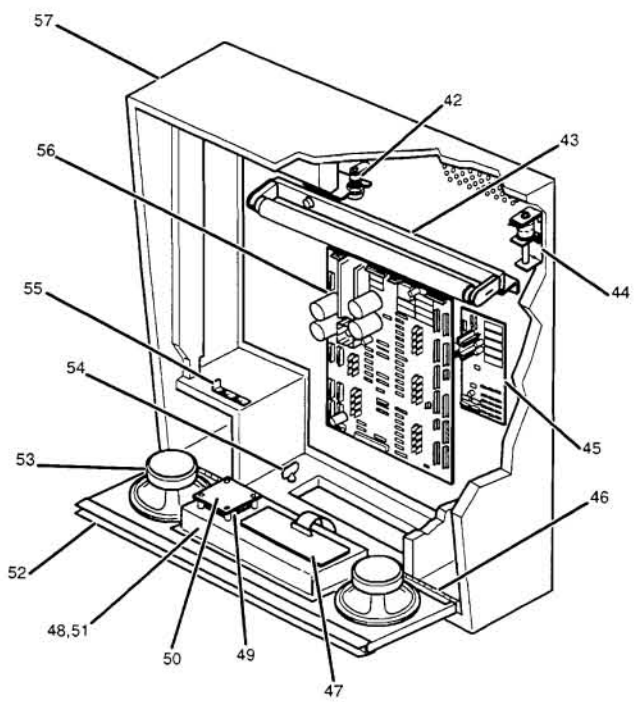

Proprietary and confidential information, not to be disclosed or copied without the express permission of CAPCOM® COIN-OP, INC.

CABINET AND BACKBOX PARTS LIST

REF.	DESCRIPTION	PART NO.
1	LATCH, LINK LOCK, HEX. CAM (CONNECTED TO CABINET)	MT00428
2	PLATE, KEEPER, LATCH (CONNECTED TO BACKBOX)	MT00428-1
3	GRILLE, SPEAKER	AW00169
4A	HINGE-LEFT, BACKBOX	MT00173-L
4B	HINGE-RIGHT, BACKBOX	MT00173-R
5	CABINET, PINBALL, LO PROFILE WITH ARTWORK	WD00162-PB6
6	FILTER, LINE	LF00100
7	CORD, LINE (POWER)	LC0010*
8	GRILLE, VENT, 10 X 16	PL00310
9A	ASSEMBLY, LEFT, ARM, PLAYFIELD LIFT	A-00351-L
9B	ASSEMBLY, RIGHT , ARM, PLAYFIELD LIFT	A-00351-R
10	TRANSFORMER, POWER	XF00105
11	LEGS, PINBALL, 28-1/2"L	MT00231
12	GRILLE, SPEAKER, 7-1/2"	PL00173
13	SPEAKER, 8.0", 4 OHM, 20 WATT	SP00101
14	NUT, 10-24 KEPS HEX	NT00101-10
15	LEVELER, LEG, 3/8-16 X 3.0 WITH NUT	MS00101
16	ARMOR, SIDE PANEL, PINBALL, BLACK	MT00163-BK
17	PUSHBUTTON,, 1-9/16, RED BUTTON / YELLOW BODY	PL00178-RY
18A	ASSEMBLY, SWITCH & CABLE, FLIPPER BUTTON SINGLE	A-00455
18B	SWITCH, LEAF, FLIPPER, DOUBLE	SW00144
19	CHASSIS, OUTLET, SERVICE, UL / CSA	MT00316-2
20	COVER, SWITCH, ON / OFF, UL / CSA	MT00579
21	ASSEMBLY, SWITCH, & PLATE, ON / OFF	A-00413
22	ASSEMBLY, BALL SHOOTER	A-00192-04
23	ASSEMBLY, LOCK, HANDRAIL	A-00125-1
24	CABLE, PRINTER (NSM) / METER PCB	C-00198
25	SWITCH, INTERLOCK, PANEL MOUNTING	SW00119
26	SWITCH, MOMENTARY, 0.1 AMPS 125 VAC	SW00132
27	BRACKET, SWITCH, INTERRUPT, 3-POSITION WITH PRINTER CONNECTOR	MT00321-2
28	ASSEMBLY, PCB, PRINTER/METER/T.D. *(OPTIONAL)*	A0019501
29	SWITCH, LEAF, ANTI-SLAM	SW00121
30	DOOR, COIN	A-00492-*
31	SWITCH, START BUTTON	SW00130
32	ASSEMBLY, TILT, PLUMB BOB, WITH CABLE	A-00065-1
33	ASSEMBLY, PCB, DIODE,	A0016900
34A	RAIL-LEFT, CABINET	MT00357-L
34B	RAIL-RIGHT, CABINET	MT00357-R
35	BRACKET, HANGER, PLAYFIELD	MT00162
36	ASSEMBLY, BOTTOM, ARCH	A-00211-PB6
37	HOLDER, FUSE, 3 AG, 4-POSITION	FS00105
38	ASSEMBLY, HANDRAIL, BLACK	A-00124
39	BRACKET, GLASS, PLAYFIELD, REAR, BLACK	MT00177-BK
40	GLASS, 26-1/8 X 19-3/4 X 1/8 *(BACKBOX)*	GL00106
	GLASS, 21.0 X 43.0 X 3/16 *(PLAYFIELD) (NOT SHOWN)*	GL00102
41	BACKGLASS, FILM	AW00165
42	KIT, LOCK, BACKBOX, COMPLETE	K-014
43	ASSEMBLY, LAMP, FLUORESCENT, 18.0"	A-00624
44	ASSEMBLY, KNOCKER	A-00150
45	ASSEMBLY, PCB, SOUND	A-0021701-PB6
46	ASSEMBLY, HINGE, SPEAKER PANEL	A-00163
47	ASSEMBLY, PCB, CPU SYSTEM	A0015404-PB6
**48	CABLE, DISPLAY POWER (NOT SHOWN)	C-00260
49	ASSEMBLY, PCB, DISPLAY SWITCHING POWER SUPPLY	A0015505
**50	COVER, PCB, DISPLAY, POWER SUPPLY	PL00338
**51	DISPLAY, DOT MATRIX 128 X 32	DP00102
**51	DISPLAY, DOT MATRIX 128 X 32 WITH ON-BOARD POWER SUPPLY	DP00103-1
52	ASSEMBLY, PANEL, SPEAKER	A-00301-PB6
53	SPEAKER, 4.0" D 4.0 OHM	SP00100
54	THUMBSCREW 3/8-16 X 3.0 WITH SHOULDER	SC00154-24
55	BRACKET, SLIDE, PANEL LATCH	MT00221
56	ASSEMBLY, PCB, POWER DRIVER	A0017701
57	BACKBOX WITH ARTWORK	WD00132-PB6

*NOTE: When ordering for service, please indicate model number of your game.

**NOTE: Factory-installed displays vary. DP00102 requires the use of power supply A0015505 and cover PL00338. DP00103-1 requires the use of cable C-00260.

Proprietary and confidential information, not to be disclosed or copied without the express permission of CAPCOM® COIN-OP, INC.

POWER DRIVER BOARD

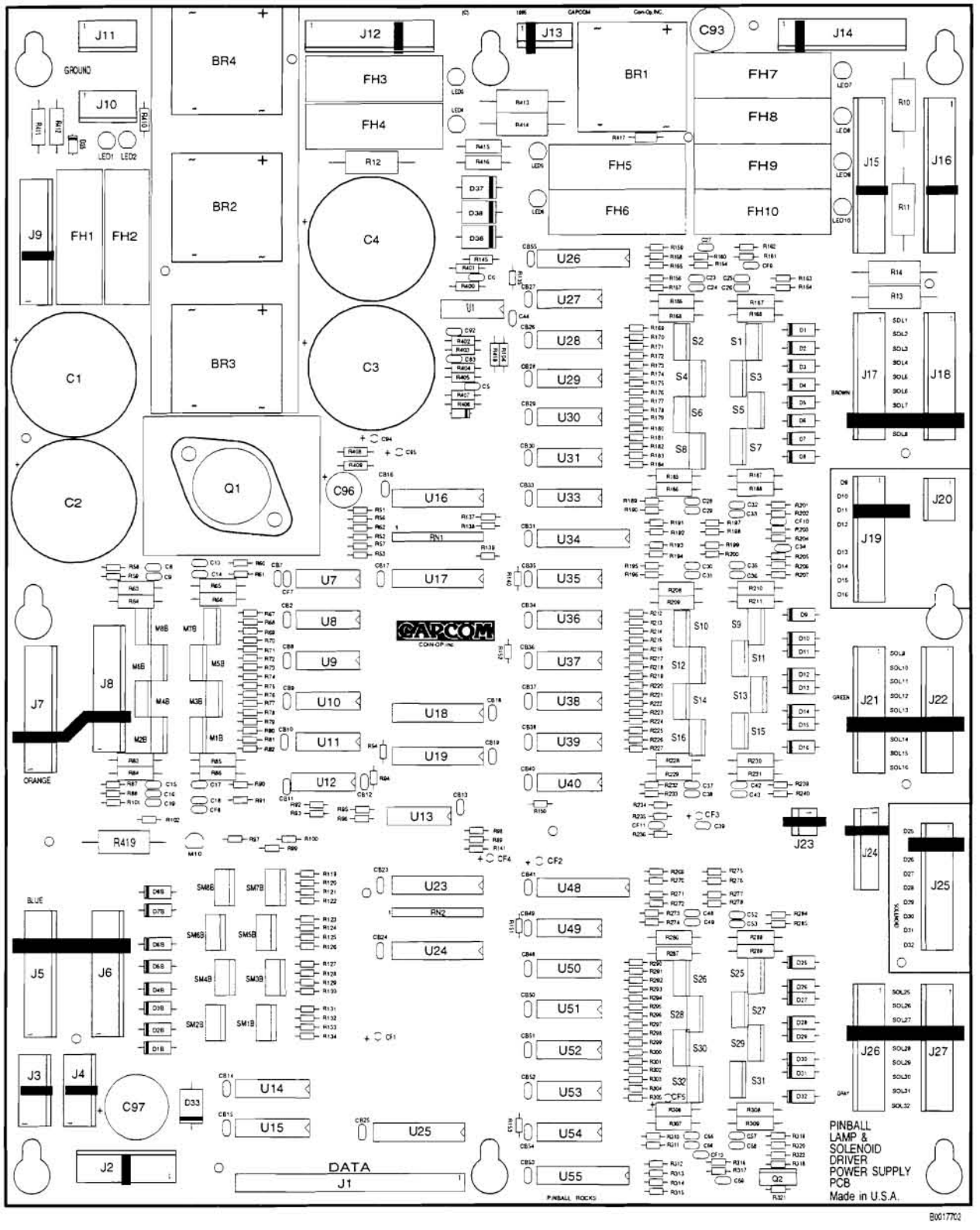

Proprietary and confidential information, not to be disclosed or copied without the express permission of CAPCOM® COIN-OP, INC.

A0017703 POWER DRIVER BOARD
PARTS LIST

DES.	DESCRIPTION	PART NUMBER
BR1-4	RECTIFIER MB352W BRIDGE 35A 200V	DI00101
BR1-4 Hardware	HEAT SINK EXTRUSION AAVID 60015	* HS00105
BR1-4 Hardware	MACHINE SCREW 10-32 X 3/4 PPH SEMS ZC	SC00100-06
C1-4	CAPACITOR ELECTROLYTIC 50V 15000UF 20% RAD	CP00010-01
C5-6,C44, CB2,CB7-11,CB13, CB26-30, CB33-38, CB40, CB48-52, CB54	CAPACITOR CERAMIC 50V .001UF 10% AX	CP00049
C8-9,C13-19,C23-39, C42-43, C48-49, C52-53, C55-59	CAPACITOR CERAMIC 50V .22UF 20% AX	CP00024
C83	CAPACITOR CERAMIC 50V .033 UF 5% AX	CP00047
C92,CB14-19, CB23-25,CB31, CB41, CB53, CB55, CF7-11, CF13	CAPACITOR CERAMIC 50V .01UF 10% AX	CP00048
C93	CAPACITOR ELECTROLYTIC 100V 100UF 20% RAD	CP00011-01
C94-95, CF1-5	CAPACITOR TANT 35V 1.0UF 10% RAD	CP00059
C96	CAPACITOR ELECTROLYTIC 10V 470UF 20% RAD	CP00016
C97	CAPACITOR ELECTROLYTIC 35V 4700UF 20% RAD SNAP-IN	CP00035
D1,D1B, D2,D2B, D3,D3B, D4,D4B, D7,D7B,	DIODE 1N4004 RECTIFIER 1.0A 400VR	DI00100
D9-16, D25-32, D34-35 D5,D5B, D6,D6B,	DIODE 1N4004 RECTIFIER 1.0A 400VR	DI00100
D33, D36-38	DIODE 1N5402 RECTIFIER 3.0A 200VR	DI00106
F1	FUSE SLO-BLO 7.0A 250V 3 AG	FS00100-07
F2-3	FUSE SLO-BLO 10.0A 250V 3 AG	FS00100-10
F4-F6	FUSE SLO-BLO 3.0A 250V 3 AG	FS00100-03
F7-10	FUSE SLO-BLO 4.0A 250V 3 AG	FS00100-04
FH1-10	FUSE HOLDER 3 AG PC MOUNTING	FS00101

DES.	DESCRIPTION	PART NUMBER
J1	CONNECTOR HEADER .100 STRAIGHT 50-PIN 2X25	CN00101-50
J2	CONNECTOR HEADER .156 STRAIGHT 7-PIN LOCK	CN00100-07
J3-4	CONNECTOR HEADER .156 STRAIGHT 5-PIN LOCK	CN00100-05
J5-9,J12, J14, J17-19, J21-22, J25-27	CONNECTOR HEADER .156 STRAIGHT 9 PIN LOCK	CN00100-09
J10-11	CONNECTOR HEADER .156 STRAIGHT 4-PIN LOCK	CN00100-04
J13	CONNECTOR HEADER .100 STRAIGHT 6-PIN LOCK	CN00104-06
J15-16	CONNECTOR HEADER .156 STRAIGHT 11-PIN LOCK	CN00100-11
J20	CONNECTOR HEADER .156 STRAIGHT 3 PIN LOCK	CN00100-03
J23	CONNECTOR HEADER .100 STRAIGHT 3-PIN LOCK	CN00104-03
J24	CONNECTOR HEADER .100 STRAIGHT 9-PIN LOCK	CN00104-9
LED1-10	LED LTL4201 RED 20MA T-1 70°	DI00105
M1B,M2B, M3B,M4B, M5B,M6B, M7B,M8B, S1-16, S25-32	TRANS STP20N10L MOSFET N-CH	TR00101
M10	TRANS 2N7000 MOSFET N-CH	TR00109
Q1	VOLTAGE REGULATOR 5A LOW DROP ADJ	VR00100
Q1 Hardware	HEAT SINK TO-3 HEAVY DUTY 520103	* HS00104
Q1 Hardware	MACHINE SCREW 6-32x1/2 PPH SEMS ZC	SC00100-04
Q2	TRANS TIP102 NPN	TR00102
Q1 Hardware	NUT 6-32 HEX KEPS	NT00101-06
R10-14	RESISTOR METAL OXIDE FILM 2W 5% 5.6K OHM	RS00114
R51,R54, R68, R70, R72,R74, R76,R78, R80,R82, R89,R98, R137-139, R141,R152, R169,R172 R173,R176 R177,R180 R181,R184, R212,R215	RESISTOR CARBON FILM 1/4W 5% 4.7K OHM	RS00100-26

Proprietary and confidential information, not to be disclosed or copied without the express permission of CAPCOM® COIN-OP, INC.

A0017703 POWER DRIVER BOARD (cont.)

DES.	DESCRIPTION	PART NUMBER
R52-53, R56-57, R92-93, R95-96, R120,R122, R124,R126, R128,R130, R132,R134, R154-155, R158-159, R191-194, R197-200, R269-272, R275-278, R312-315, R400-401, R404-406	RESISTOR CARBON FILM 1/4W 5% 10K OHM	RS00100-07
R62,R94, R102,R135, R140,R150 R151,R153, R160,R205, R236.R318	RESISTOR CARBON FILM 1/4W 5% 100 OHM	RS00100-02
R63-66, R83-86, R165-168, R185-188, R208-211, R228-231, R286-289, R306-309	RESISTOR CARBON FILM 1W 5% .020 OHM	RS00112-01
R67,R69, R71,R73, R75,R77, R79,R81, R170-171, R174-175, R178-179, R182-183, R213-214, R217-218, R221-222, R225-226, R291-292, R295-296, R299-300, R303-304	RESISTOR CARBON FILM 1/4W 5% 750 OHM	RS00100-42
R97	RESISTOR METAL FILM 1/4W 1% 270 OHM	RS00113-12
R99	RESISTOR CARBON FILM 1/4W 5% 330 OHM	RS00100-12
R100	RESISTOR METAL FILM 1/4W 1% 200 OHM	RS00113-11
R101,R162, R204,R235, R317	RESISTOR METAL FILM 1/4W 1% 7.50K OHM	RS00113-08
R104,R418	RESISTOR CARBON FILM 1/4W 5% 3.3K OHM	RS00100-27

DES.	DESCRIPTION	PART NUMBER
R119,R121, R123,R125, R127,R129, R131,R133, R407	RESISTOR CARBON FILM 1/4W 5% 1K OHM	RS00100-05
R145	RESISTOR CARBON FILM 1/4W 5% 27K OHM	RS00100-40
R156-157, R163-164, R189-190, R195-196, R201-202, R206-207, R232-233, R239-240, R273-274, R284-285, R310- 311, R319-320	RESISTOR CARBON FILM 1/4W 5% 56 OHM	RS00100-41
R161,R203, R234,R316	RESISTOR METAL FILM 1/4W 1% 470 OHM	RS00113-06
R216,R219 R220,R223 R224,R227, R290,R293 R294,R297 R298,R301 R302,R305, R321-322	RESISTOR CARBON FILM 1/4W 5% 4.7K OHM	RS00100-26
R402	RESISTOR METAL FILM 1/4W 1% 2K OHM	RS00113-03
R403	RESISTOR METAL FILM 1/4W 1% 11K OHM	RS00113-02
R408	RESISTOR METAL FILM 1/4W 1% 374 OHM	RS00113
R409	RESISTOR METAL FILM 1/4W 1% 121 OHM	RS00113-01
R410	RESISTOR CARBON FILM 1/4W 5% 820 OHM	RS00100-30
R411, R415-416	RESISTOR CARBON FILM 1/2W 5% 1.2K OHM	RS00102-11
R412	RESISTOR CARBON FILM 1/2W 5% 1.5K OHM	RS00101-09
R413	RESISTOR METAL OXIDE FILM 2W 5% 6.2K OHM	RS00114-02
R414	RESISTOR METAL OXIDE FILM 2W 5% 270 OHM	RS00114-03
R417	RESISTOR METAL FILM 1/4W 1% 56.2K OHM	RS00113-10
R419	RESISTOR METAL OXIDE FILM 2W 5% 620 OHM	RS00114-01
RN1-2	RESISTOR SIP 10K X 9R 2% BUSSED	RS00104
SM1B, SM2B, SM3B, SM4B	TRANS VN02N MOSFET RELAY	TR00105

Proprietary and confidential information, not to be disclosed or copied without the express permission of CAPCOM® COIN-OP, INC.

A0017703 POWER DRIVER BOARD (cont.)

DES.	DESCRIPTION	PART NUMBER
SM5B, SM6B, SM7B, SM8B	TRANS VN02N MOSFET RELAY	TR00105
U1,U7, U12,U27, U33,U35, U40, U49, U54	IC LM339 VOLTAGE COMPARATOR	IC00036
U8-11, U13,U28-31,U36-39, U50-53	IC 74LS74 DUAL D-TYPE FF	IC00042
U14-15	IC 74LS138 3 OF 8 LINE DECODER	IC00047
U16-18, U24-26, U34,U48, U55	IC 74LS244 OCT BFFR/LINE DR	IC00057
U19	IC TPIC6273 D-TYPE FF	IC00043
U19	20 PIN DIP SOCKET	XXXXXXX
U23	IC 74LS273 OCTAL D-TYPE FF	IC00041

* NOTE: Heat sink compound shall be applied to ALL heat sink/ semi-conductor surfaces.

+ Spacing between the bottom of the bridge and the PCB shall be 1/4".

Proprietary and confidential information, not to be disclosed or copied without the express permission of CAPCOM® COIN-OP, INC.

SOUND BOARD

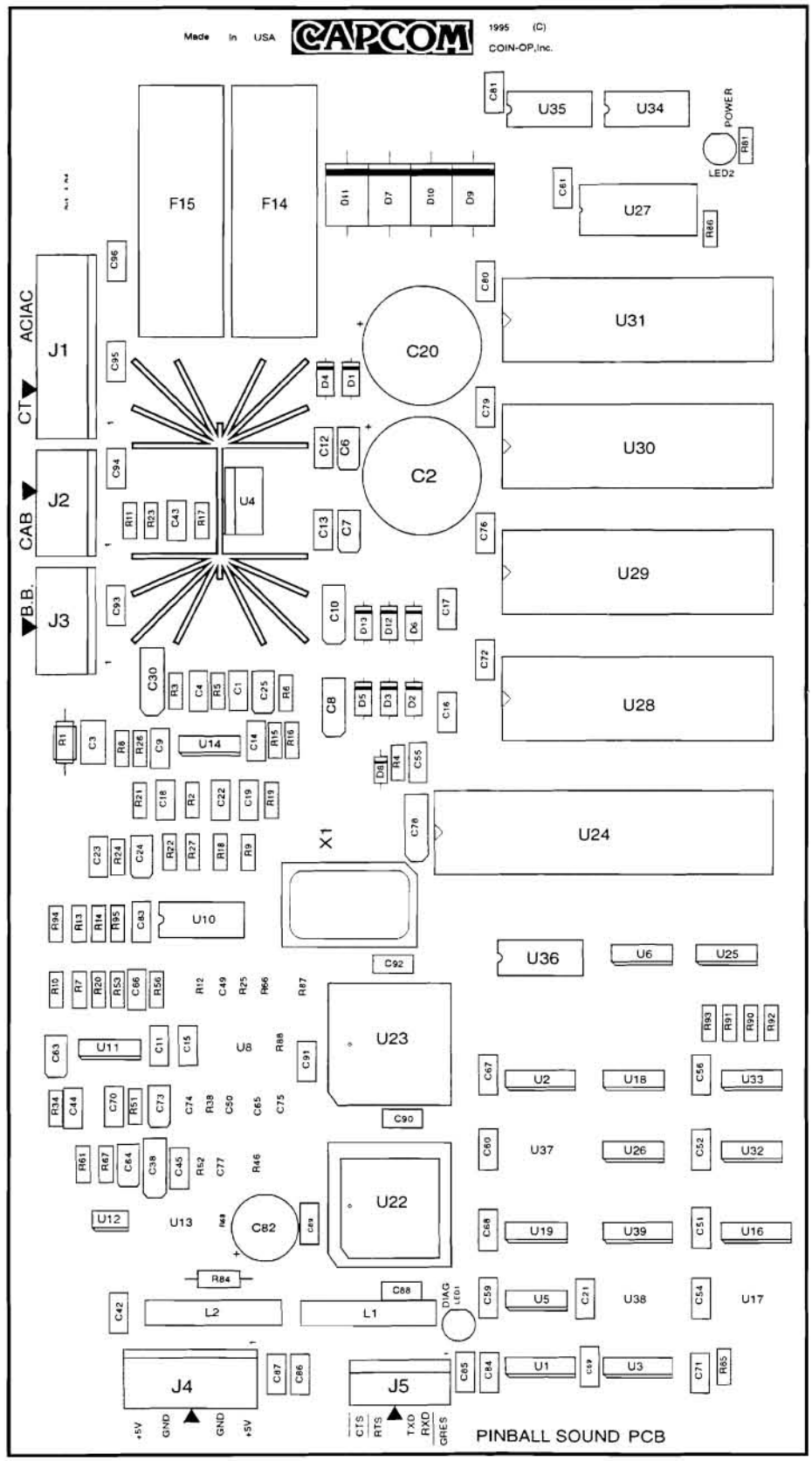

Proprietary and confidential information, not to be disclosed or copied without the express permission of CAPCOM® COIN-OP, INC.

SOUND BOARD ASSEMBLY A0021701
PARTS LIST

DES.	DESCRIPTION	PART NUMBER
C1,C4	CAPACITOR , CERAMIC 100V .001UF 10% SMT 1206	CP00055-SMT
C2,C20	CAPACITOR , ELECTROLYTIC 25V 4700UF 20% RAD	CP00020
C3	CAPACITOR , CERAMIC 50V .22UF 20% SMT 1210	CP00051-SMT
C6-7,C24-25,C63-64, C73	CAPACITOR , TANTALUM 35V 1.0UF 10% SMT	CP00012-SMT
C8,C10,C38	CAPACITOR , TANTALUM 25V 4.7UF 20% SMT	CP00050-SMT
C9,C11-17 C21,C42, C45,C51-52, C54-56, C59-61, C67-C69, C71-72 C76, C79-81, C83,C88-C96	CAPACITOR, CERAMIC 50V .1UF 10% SMT 1206	CP00056-SMT
C18	CAPACITOR , CERAMIC 100V .022UF 20% SMT 1206	CP00052-SMT
C19,C22, C44,C70	CAPACITOR , CERAMIC 50V .033UF 5% SMT 1206	CP00061-SMT
C23,C66	CAPACITOR , CERAMIC 100V 3300PF 20% SMT 1206	CP00064-SMT
C30,C78	CAPACITOR , TANTALUM 16V 22UF 20% SMT	CP00045-SMT
C43	CAPACITOR , CERAMIC 100V 470PF 5% SMT 1206	CP00060-SMT
C82	CAPACITOR , ELECTROLYTIC 16V 470UF 20% RAD	CP00054
C84-87	CAPACITOR , CERAMIC 100V 100PF 10% SMT 1206	CP00058-SMT
D1-6, D12-13	DIODE 1N4004 RECTIFIER 1.0A 400VR	DI00100
D7,D9-11	DIODE 1N5402 RECTIFIER 3.0A 200VR	DI00106
D8	DIODE 1N4148 SW 200MA 75VR	DI00104
J1	CONNECTOR HEADER .156 STRAIGHT 7-PIN LOCK	CN00100-07
J2,J3	CONNECTOR HEADER .156 STRAIGHT 4-PIN LOCK	CN00100-04
J4	CONNECTOR HEADER .156 STRAIGHT 5-PIN LOCK	CN00100-05
J5	CONNECTOR HEADER .100 STRAIGHT 6-PIN LOCK	CN00104-06
L1-2	IND CHOKE 4.7UH 3A AXIAL	IN00100
LED1-2	LED LTL4201 RED 20MA T-1 70 °	DI00105
F14-F15	FUSE HOLDER 3 AG PC MOUNTING	FS00101
F14,F15	FUSE SLO BLO 3.0A 250V 3 AG	FS00100-03
R1	RESISTOR CARBON FILM 1/4W 5% 1 OHM	RS00100-23
R2	RESISTOR CARBON FILM 1/8W 5% 100 OHM SMT 1206	RS00102-02S
R3,R5	RESISTOR CARBON FILM 1/8W 5% 12K OHM SMT 1206	RS00102-15S
R4,R85	RESISTOR CARBON FILM 1/8W 5% 1K OHM SMT 1206	RS00102-02S
R6,R17	RESISTOR CARBON FILM 1/8W 5% 22K OHM SMT 1206	RS00102-18S
R7,R20	RESISTOR CARBON FILM 1/8W 5% 3.3K OHM SMT 1206	RS00102-12S

DES.	DESCRIPTION	PART NUMBER
R8-9,R11	RESISTOR CARBON FILM 1/8W 5% 680 OHM SMT 1206	RS00102-06S
R10,R53, R86,R90-R93	RESISTOR CARBON FILM 1/8W 5% 10K OHM SMT 1206	RS00102-05S
R13-14	RESISTOR CARBON FILM 1/8W 5% 27K OHM SMT 1206	RS00102-21S
R15	RESISTOR CARBON FILM 1/8W 5% 47K OHM SMT 1206	RS00102-17S
R16	RESISTOR CARBON FILM 1/8W 5% 39K OHM SMT 1206	RS00102-16S
R18-19, R21-22	NOT USED	----------
R23	RESISTOR CARBON FILM 1/8W 5% 2.0K OHM SMT 1206	RS00102-19S
R24,R26-27	RESISTOR CARBON FILM 1/8W 5% 4.7K OHM SMT 1206	RS00102-13S
R34,R51	RESISTOR CARBON FILM 1/8W 5% 1.2K OHM SMT 1206	RS00102-09S
R67	RESISTOR CARBON FILM 1/8W 5% 11K OHM SMT 1206	RS00102-20S
R81	RESISTOR CARBON FILM 1/8W 5% 270 OHM SMT 1206	RS00102-07S
R84	RESISTOR CARBON FILM 1/4W 5% 0 OHM	RS00100-10
R87	RESISTOR CARBON FILM 1/8W 5% 33 OHM SMT 1206	RS00102-14S
R94,R95	RESISTOR CARBON FILM 1/8W 5% 2.2K OHM SMT 1206	RS00102-23S
U1,U3	IC 74LS112 DUAL J-K F/F SMT	IC00093-SMT
U2	IC 74LS165 8-BIT SHIFT REGISTER SMT	IC00089-SMT
U4	IC TDA2030A 18W HI-FI AMP	IC00056
U4	HEATSINK TO-220 W/KOOL CLIP	HS00102
U5,U32	IC 74HC74 DUAL D-TYPE F/F SMT	IC00087-SMT
U6	IC 74LS74 DUAL D-TYPE FF SMT	IC00042-SMT
U10	IC X9241U QUAD E2POT 50K SMT	IC00061-SMT
U11,U14	IC TLO84 OPERATIONAL AMP SMT	IC00037-SMT
U12	IC TDA1545 16-BIT DAC SMT	IC00091-SMT
U16,U39	IC 74LS161 4-BIT SYN BIN CTR SMT	IC00083-SMT
U18-19	IC 74LS04 HEX INVERTER SMT	IC00048-SMT
U22	IC TMS320AV120 MPEG AUDIO DECODER SMT	IC00086-SMT
U24	IC87C52 PROGRAMMED MICOCONTROLLER	A-00566-U24
U24	SOCKET 40-PIN DIP	SK00112-40
U25-26	IC 74LS08 QUAD 2-IN AND GATE	IC00088-SMT
U27	IC SRAM32KX8 SMT	IC00090-SMT
U28-31	ROM SOCKET 32PIN600	SK00112-32
*U28	ROM, MASKED	A-00662-U28
*U29	ROM, MASKED	A-00662-U29
U33	IC 74LS00 QUAD 2-IN NAND GATE SMT	IC00084-SMT
U34-36	IC 74LS373 OCT D-TYPE LATCH SMT	IC00092-SMT
X1	CLOCK OSCILLATOR 24MHZ	OS00101

NOTE: C57 & 58 are replaced with jumper wires.

* NOTE: Game ROMs are not included with A0015003: must be purchased separately.

Proprietary and confidential information, not to be disclosed or copied without the express permission of CAPCOM® COIN-OP, INC.

CPU BOARD

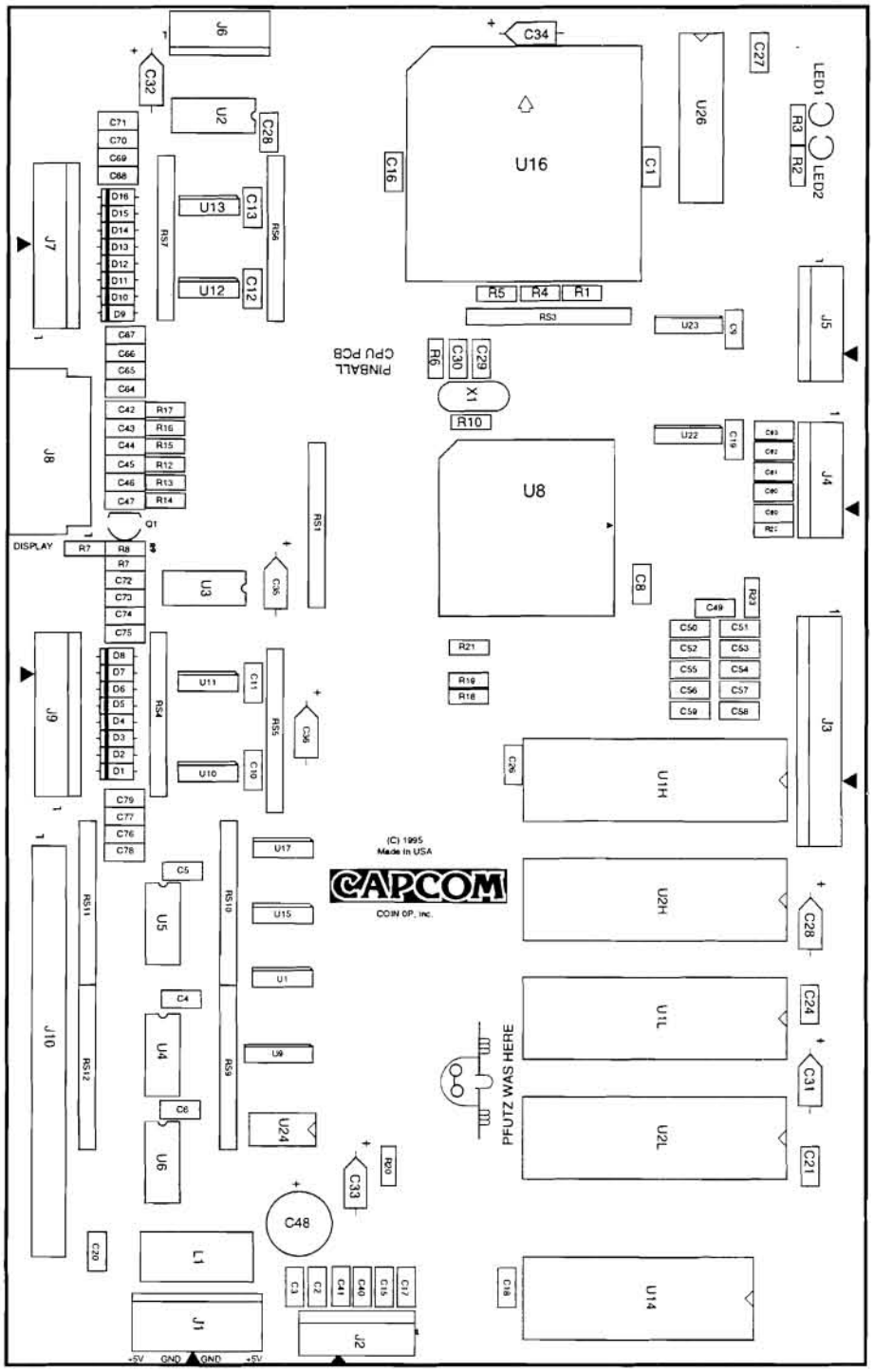

Proprietary and confidential information, not to be disclosed or copied without the express permission of CAPCOM® COIN-OP, INC.

CPU BOARD ASSEMBLY A0015405
PARTS LIST

DES.	DESCRIPTION	PART NUMBER
C1,C8,C16, C18,C20-21, C24,C26-27	CAPACITOR CER 50V .1UF 10% SMT 1206	CP00056-SMT
C2-6, C9, C19,C23	CAPACITOR CER 50V .01UF 10% SMT 1206	CP00048-SMT
C10-13	CAPACITOR CER 50V .001UF 10% SMT 1206	CP00055-SMT
C15,C17, C40-41, C49- 80	CAPACITOR CER 100V 100PF 10% SMT 1206	CP00058-SMT
C28,C31-36	CAPACITOR TANT 35V 1.0UF 5% AX	CP00012
C29-30, C42-47	CAPACITOR CER 100V 10PF 10% SMT 1206	CP00017-SMT
C48	CAPACITOR ELECTROLYTIC 16V 470UF 20% RAD	CP00054
D1-16	DIODE 1N4148 SW 200MA 75VR	DI00104
J1	CONNECTOR HEADER .156 STRAIGHT 5-PIN LOCK	CN00100-05
J2,J4	CONNECTOR HEADER .100 STRAIGHT 7-PIN LOCK	CN00104-07
J3	CONNECTOR HEADER .100 STRAIGHT 14-PIN LOCK	CN00104-14
J6	CONNECTOR HEADER .100 STRAIGHT 6-PIN LOCK	CN00104-06
J7,J9	CONNECTOR HEADER .100 STRAIGHT 10-PIN LOCK	CN00104-10
J8	CONNECTOR HEADER .100 RT 14-PIN 2X7 4W	CN00137-14
J10	CONNECTOR HEADER .100 STRAIGHT 50-PIN 2X25	CN00101-50
L1	IND 4.7UH 3.4A 15% AX	IN00100
LED1-2	LED LTL4201 RED 20MA T-1 70 °	DI00105
Q1	TRANSISTOR 2N3904 NPN G.P. AMP	TR00106
R1,R10	RESISTOR CARBON FILM 1/8W 5% 33 OHM SMT 1206	RS00102-41S
R2-3	RESISTOR CARBON FILM 1/8W 5% 270 OHM SMT 1206	RS00102-03S
R4-7	RESISTOR CARBON FILM 1/8W 5% 4.7K OHM SMT 1206	RS00102-26S
R8	RESISTOR CARBON FILM 1/8W 5% 1K OHM SMT 1206	RS00102-05S
R9	RESISTOR CARBON FILM 1/8W 5% 1.2K OHM SMT 1206	RS00102-08S
R12-17	RESISTOR CARBON FILM 1/8W 5% 100 OHM SMT 1206	RS00102-02S
R18-21	RESISTOR CARBON FILM 1/8W 5% 3.3K OHM SMT 1206	RS00102-27S
R22-23	RESISTOR CARBON FILM 1/8W 5% 10K OHM SMT 1206	RS00102-07S
RS1,RS3	RESISTOR SIP 4.7K X 9R 2% BUSSED	RS00111
RS4,RS7	RESISTOR SIP 1.2K X 9R 2% BUSSED	RS00103
RS5-6, RS9-12	RESISTOR SIP 10K X 9R 2% BUSSED	RS00104
*U1H	EPROM	A-00662-U1H
*U1L	EPROM	A-00662-U1L
U1H,U1L	SOCKET 32 PIN .600 DUAL WIPE	SK00112-32
U1	IC 74LS02 QUAD NOR SMT	IC00098-SMT
U2-6	IC 74LS245 OCT BUS TRANSCEIVER SMT	IC00044-SMT
U8	IC XC68306 MPU 16-BIT	IC00046
U9	IC 74LF139 DUAL 2-4 DECODER SMT	IC00117-SMT
U10-13	IC LM339 VOLTAGE COMPARATOR SMT	IC00036-SMT
U14	IC SRAM 8K X 8 100NS BAT	IC00035
U15	IC 74LS14 HEX SCHMITT TRIG SMT	IC00063-SMT
U16	SOCKET IC 84-PIN PLCC	SK00101-84
U16	ACTEL 1020 PROGRAMMED	IC00106
U17	IC 74LS74 DUAL D-TYPE FF SMT	IC00042-SMT
U22-23	IC 74LS257 QUAD 2-IN MUX SMT	IC00045-SMT
U24	IC MAX699 RESET CHIP	IC00097
U25	IC DRAM 256K X 16 100NS	IC00074-SMT
X1	CRYSTAL 16.67 MHZ	CR00103

*NOTE: Game ROMs are not included, must be purchased separately.

Proprietary and confidential information, not to be disclosed or copied without the express permission of CAPCOM® COIN-OP, INC.

DISPLAY POWER SUPPLY BOARD A0015505

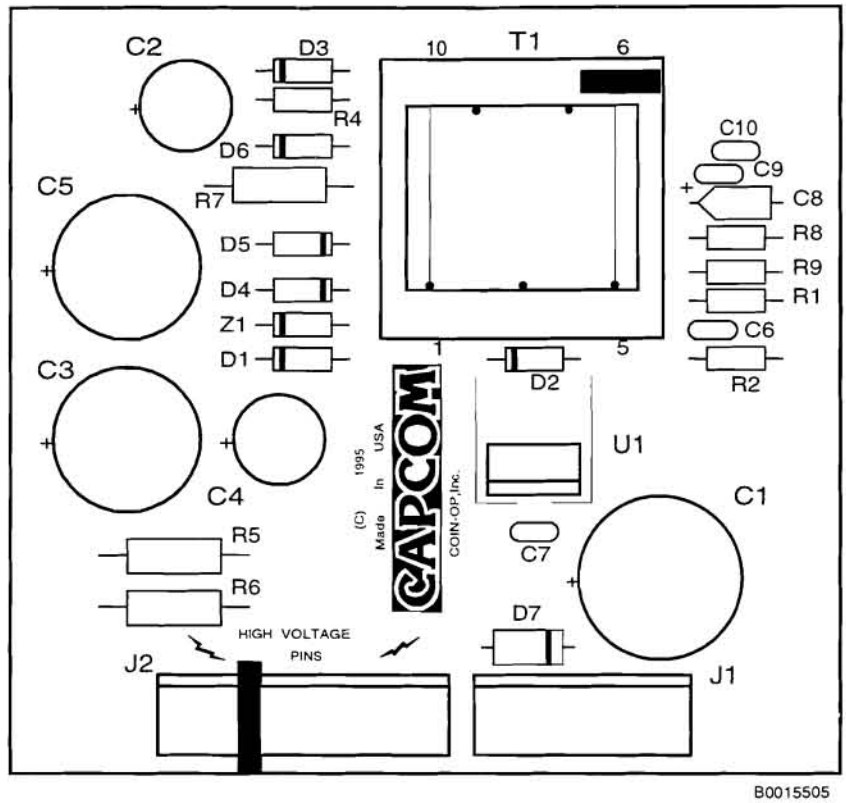

DES.	DESCRIPTION	PART NUMBER
*C1	CAPACITOR ELECTROLYTIC 25V 4700UF 20% RAD	CP00020
*C2	CAPACITOR ELECTROLYTIC 25V 220UF 20% RAD	CP00041
*C3,C5	CAPACITOR ELECTROLYTIC 160V 47UF 20% RAD	CP00034
*C4	CAPACITOR ELECTROLYTIC 200V 6.8UF 20% RAD	CP00042
C7	CAPACITOR CERAMIC 50V .1UF 10% AX	CP00019
C8	CAPACITOR TANTALUM 35V 1.0UF 5% AX	CP00012
D1-3	DIODE 1N5819 1A 40V SCHOTTKEY	DI00108
D4-6	DIODE MUR160 1A 600V ULTRA FAST RECOVERY	DI00113
D7	DIODE, IN5402 RECTIFIER 3.0A 200vR	DI00106
HS1	HEAT SINK TO220 0.5 X 0.75W	HS00103
J1	CONNECTOR HEADER .156 STRAIGHT 6-PIN LOCK	CN00100-06
J2	CONNECTOR HEADER .156 STRAIGHT 8 PIN LOCK	CN00100-08

DES.	DESCRIPTION	PART NUMBER
R1	RESISTOR METAL FILM 1/4W 1% 64.9K OHM	RS00113-04
R2	RESISTOR METAL FILM 1/4W 1% 1.24K OHM	RS00113-05
R4	RESISTOR CARBON FILM 1/4W 5% 1.5K OHM	RS00100-09
R5	RESISTOR CARBON FILM 1/2W 5% 47K OHM	RS00100-20
R6	RESISTOR CARBON FILM 1.0W 5% 15K OHM	RS00112-03
R7	RESISTOR CARBON FILM 1/2W 5% 12K OHM	RS00100-18
R8	RESISTOR CARBON FILM 1/4W 5% 330 OHM	RS00100-12
T1	TRANSFORMER FLYBACK 47UH 30VA 13-23VDC	XF00103
U1	SWITCHING REGULATOR LT1271CT HI EFF	IC00082
Z1	DIODE 1N4748 ZENER 1W 22V	DI00110

* CAPS: C1-C5 are special capacitors for switching power supplies, they are low impedance, high ripple current capacitors.

Proprietary and confidential information, not to be disclosed or copied without the express permission of CAPCOM® COIN-OP, INC.

INTERFACE BOARD ASSEMBLY A0019501

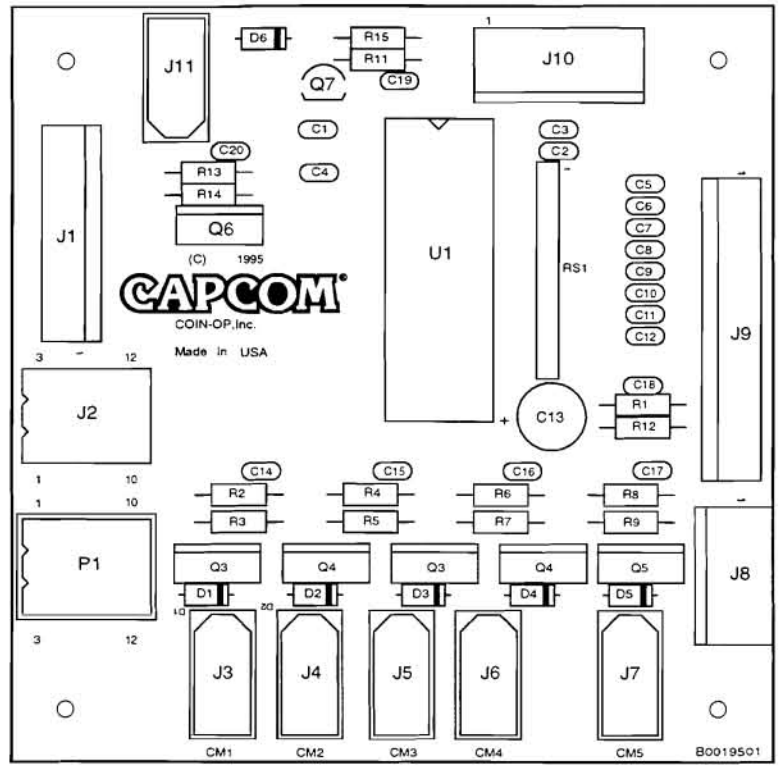

DES.	DESCRIPTION	PART NUMBER
C1-4	CAPACITOR CERAMIC 50V .22UF 10% AX	CP00024
C5-12	CAPACITOR CERAMIC 100V 100PF 10% AX	CP00058
C13	CAPACITOR ELECTROLYTIC 100UF 25V 20% RAD	CP00067
C14-20	CAPACITOR CERAMIC 50V .1UF 10% AX	CP00019
D1-6	DIODE 1N4004 RECTIFIER 1.0A 400VR	DI00100
J1	CONNECTOR HEADER .100 STRAIGHT 10-PIN LOCK	CN00104-10
J2	CONNECTOR .062, 12-PIN FEMALE, RECEPTACLE	CN00111-12
J3-7,J11	CONNECTOR, .062, 3-PIN FEMALE, RECEPTACLE	CN00112-03
J8	CONNECTOR HEADER .156 STRAIGHT 4-PIN LOCK	CN00100-04
J9	CONNECTOR HEADER .100 STRAIGHT 14-PIN LOCK	CN00104-14

DES.	DESCRIPTION	PART NUMBER
J10	CONNECTOR HEADER .156 STRAIGHT 5-PIN LOCK	CN00100-05
P1	CONNECTOR .062, 12-PIN MALE, PLUG	CN00112-12
P1	TERMINAL MALE PC TAIL .062	CN00139-M
R1,R11-14	RESISTOR CARBON FILM 1/4W 5% 10K OHM	RS00100-07
R2,R4,R6, R8,R15	RESISTOR CARBON FILM 1/4W 5% 4.7K OHM	RS00100-26
R3,R5, R7,R9	RESISTOR CARBON FILM 1/4W 5% 12K OHM	RS00100-18
RS1	RESISTOR SIP 10K X 9R 5% BUSSED	RS00103
Q1-4	TRANSISTOR TIP-107 PNP	TR00103
Q5-6	TRANSISTOR TIP-102 NPN	TR00102
Q7	TRANSISTOR 2N3906 PNP	TR00108
U1	IC LT1337ACN 5V RS232 DRIVER	IC00114

Proprietary and confidential information, not to be disclosed or copied without the express permission of CAPCOM® COIN-OP, INC.

DIODE BOARD A0016900

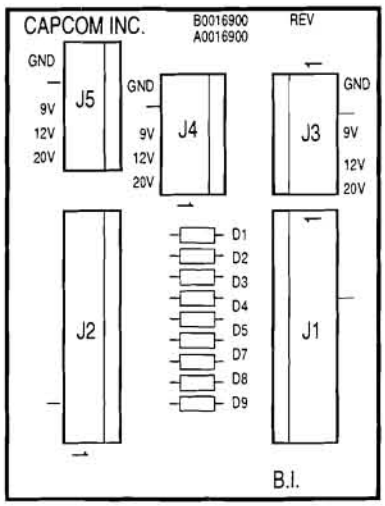

DES.	DESCRIPTION	PART NUMBER
D1-9	DIODE 1N4004 RECTIFIER 1.0A 400VR	DI00100
J1-2	CONNECTOR HEADER .156 STRAIGHT 9-PIN LOCK	CN00100-09
J3-5	CONNECTOR HEADER .156 STRAIGHT 5-PIN LOCK	CN00100-05

Proprietary and confidential information, not to be disclosed or copied without the express permission of CAPCOM® COIN-OP, INC.

NOTES

Proprietary and confidential information, not to be disclosed or copied without the express permission of CAPCOM® COIN-OP, INC.

LAMP BOARD IDENTIFICATION

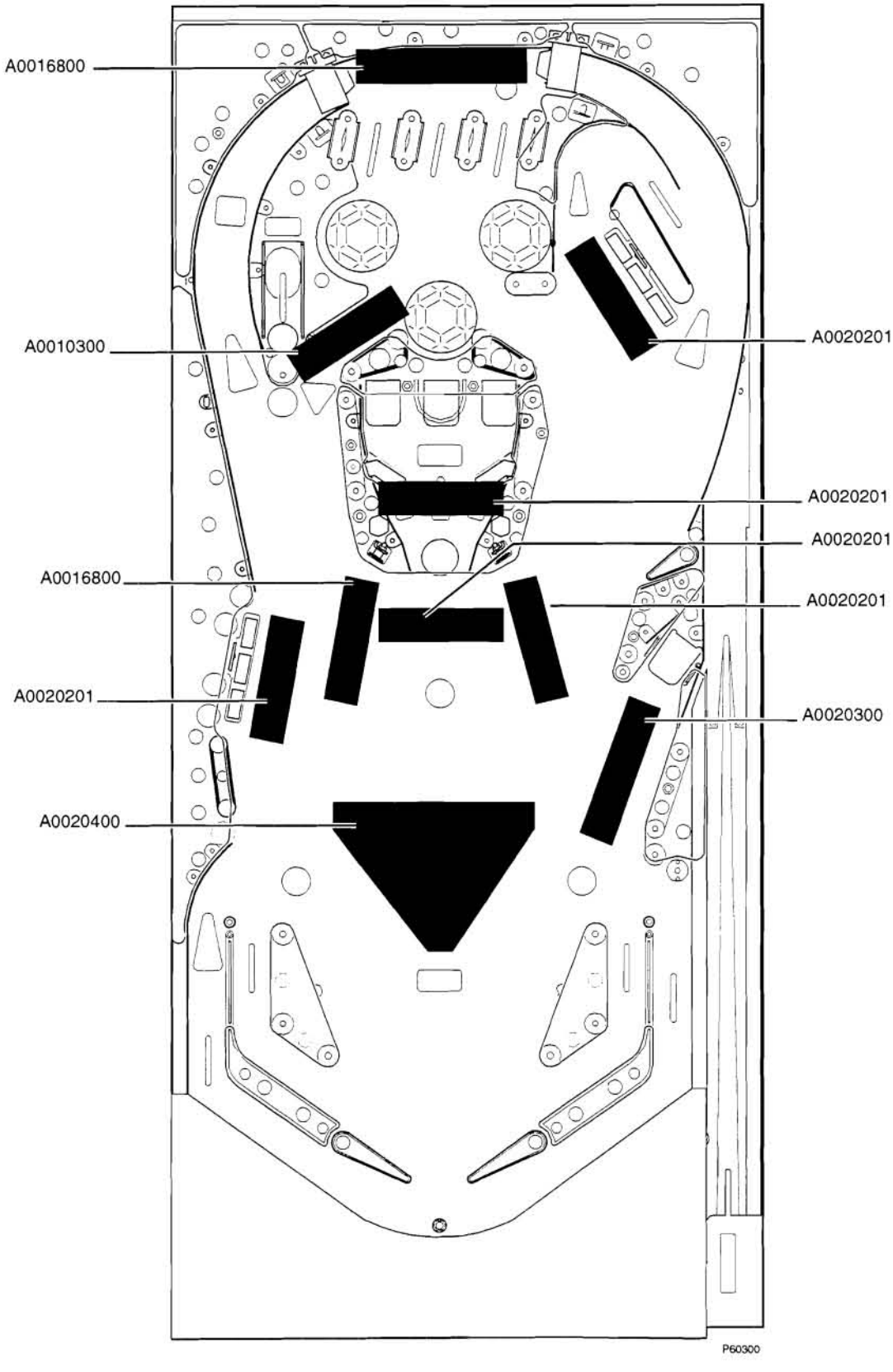

Proprietary and confidential information, not to be disclosed or copied without the express permission of CAPCOM® COIN-OP, INC.

LAMP BOARD ASSEMBLIES

A0010300

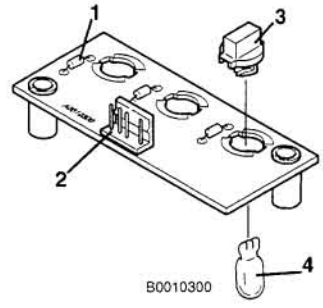

A0020201

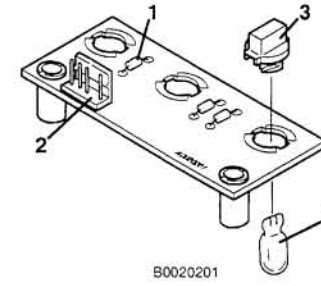

A0016800

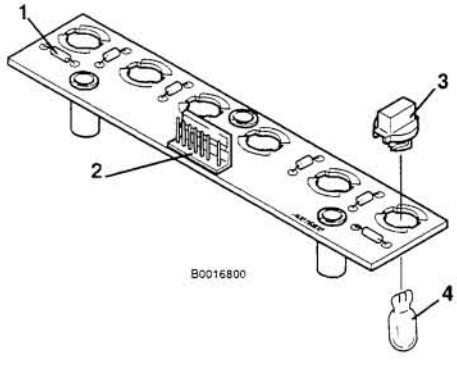

A0020300

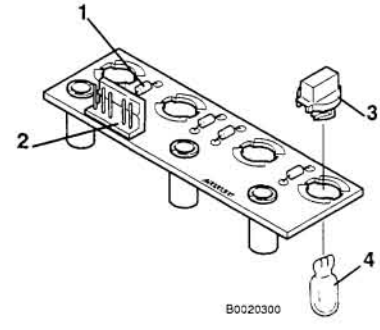

A0020400

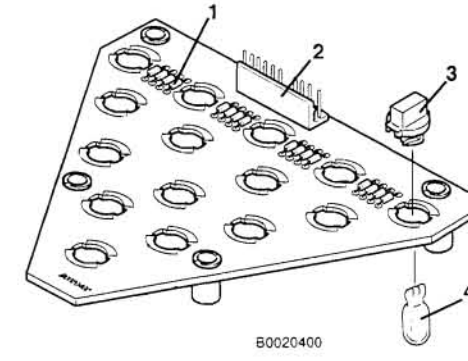

REF.	DESCRIPTION	COMPONENT P/N	LAMP BOARD ASSEMBLY P/N AND COMPONENT PART QTY.				
			A0010300	A0016800	A0020201	A0020300	A0020400
1	DIODE, IN4004 RECTIFIER	DI00100	3	6	3	4	15
2	CONNECTOR, HEADER	CN00100-08		1			
2	CONNECTOR, HEADER	CN00129-15					1
2	CONNECTOR, HEADER	CN00100-05	1		1		
2	CONNECTOR, HEADER	CN00100-06				1	
3	SOCKET, LAMP	SK00102	3	6	3	4	15
4	LAMP, #555, 6.3V WEDGE	LP00100	3	6	3	4	15

Proprietary and confidential information, not to be disclosed or copied without the express permission of CAPCOM® COIN-OP, INC.

CABINET, BACKBOX, & PLAYFIELD LAMPS

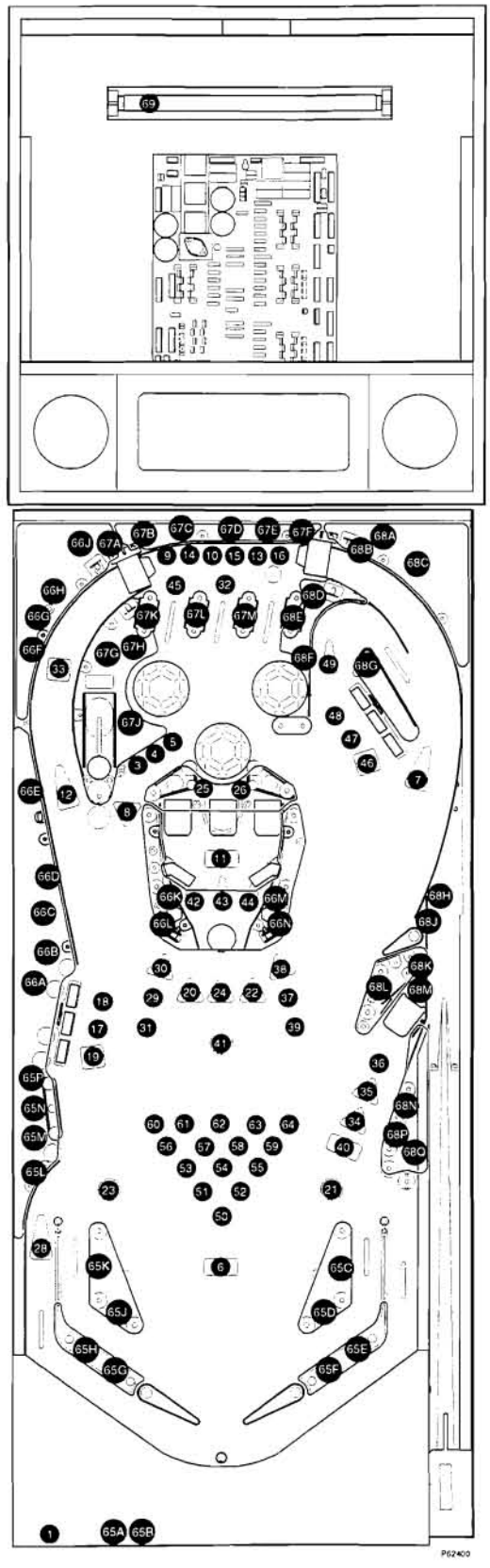

Proprietary and confidential information, not to be disclosed or copied without the express permission of CAPCOM® COIN-OP, INC.

CABINET, BACKBOX, & PLAYFIELD LAMPS

REF	*MATRIXED LAMPS	WIRE COLOR		BULB	PART
		COLUMN	ROW	TYPE	NUMBER
1	11B START BUTTON	BLU/GRY	ORG/BRN	44	LP00104
2	12B NOT USED	-----	-----	-----	-----
3	13B CAPTIVE BALL 1	BLU/GRY	ORG/BLK	555	LP00100
4	14B CAPTIVE BALL 2	BLU/GRY	ORG/YEL	555	LP00100
5	15B CAPTIVE BALL 3	BLU/GRY	ORG/GRN	555	LP00100
6	16B SHOOT AGAIN	BLU/GRY	ORG/BLU	44	LP00104
7	17B RIGHT SUPER CUE	BLU/GRY	ORG/VIO	44	LP00104
8	18B CAPTIVE BALL EB	BLU/GRY	ORG/GRY	44	LP00104
9	21B 1 BALL	BLU/VIO	ORG/BRN	555	LP00100
10	22B 2 BALL	BLU/VIO	ORG/RED	555	LP00100
11	23B JACKPOT	BLU/VIO	ORG/BLK	44	LP00104
12	24B LEFT SUPER CUE	BLU/VIO	ORG/YEL	44	LP00104
13	25B 3 BALL	BLU/VIO	ORG/GRN	555	LP00100
14	26B 9 BALL	BLU/VIO	ORG/BLU	555	LP00100
15	27B 10 BALL	BLU/VIO	ORG/VIO	555	LP00100
16	28B 11 BALL	BLU/VIO	ORG/GRY	555	LP00100
17	31B 6 BALL	BLU/BLK	ORG/BRN	555	LP00100
18	32B 14 BALL	BLU/BLK	ORG/RED	555	LP00100
19	33B LEFT DROP SPOT 9	BLU/BLK	ORG/BLK	555	LP00100
20	34B 9 BALL POINTS	BLU/BLK	ORG/YEL	555	LP00100
21	35B ROTATION OPTION	BLU/BLK	ORG/GRN	44	LP00104
22	36B 9 BALL XBALL	BLU/BLK	ORG/BLU	555	LP00100
23	37B 9 BALL OPTION	BLU/BLK	ORG/VIO	44	LP00104
24	38B 9 BALL SPECIAL	BLU/BLK	ORG/GRY	555	LP00100
25	41B L. CENTER PKT. GI	BLU/GRN	ORG/BRN	44	LP00104
26	42B R. CENTER PKT GI	BLU/GRN	ORG/RED	44	LP00104
27	43B RIGHT TOPLANE	BLU/GRN	ORG/BLK	44	LP00104
28	44B KICKER	BLU/GRN	ORG/YEL	44	LP00104
29	45B 4 BALL	BLU/GRN	ORG/GRN	555	LP00100
30	46B LITE SUPER CUE	BLU/GRN	ORG/BLU	555	LP00100
31	47B 12 BALL	BLU/GRN	ORG/VIO	555	LP00100
32	48B CENTER TOPLANE	BLU/GRN	ORG/GRY	44	LP00104
33	51B ORBIT SPOT 9	BLU/YEL	ORG/BRN	44	LP00104
34	52B CALL YOUR SHOT	BLU/YEL	ORG/RED	555	LP00100
35	53B COLLECT BONUS	BLU/YEL	ORG/BLK	555	LP00100
36	54B 8 BALL	BLU/YEL	ORG/YEL	555	LP00100
37	55B 13 BALL	BLU/YEL	ORG/GRN	555	LP00100
38	56B LITE SUPER CUE R.	BLU/YEL	ORG/BLU	555	LP00100
39	57B 5 BALL	BLU/YEL	ORG/VIO	555	LP00100
40	58B BALLORAMA	BLU/YEL	ORG/GRY	44	LP00104
41	61B 9 BALL OPTION	BLU/ORG	ORG/BRN	44	LP00104
42	62B CNTR. POCKET L.	BLU/ORG	ORG/RED	555	LP00100
43	63B CNTR. POCKET C.	BLU/ORG	ORG/BLK	555	LP00100
44	64B CNTR POCKET R.	BLU/ORG	ORG/YEL	555	LP00100
45	65B LEFT TOPLANE	BLU/ORG	ORG/GRN	44	LP00104
46	66B R. DROP SPOT 9	BLU/ORG	ORG/BLU	555	LP00100
47	67 15 BALL	BLU/ORG	ORG/VIO	555	LP00100
48	68B 7 BALL	BLU/ORG	ORG/GRY	555	LP00100
49	71B BANK SHOT	BLU/RED	ORG/BRN	44	LP00104
50	72B BONUS RACK 1	BLU/RED	ORG/RED	555	LP00100
51	73B BONUS RACK 2	BLU/RED	ORG/BLK	555	LP00100
52	74B BONUS RACK 3	BLU/RED	ORG/YEL	555	LP00100
53	75B BONUS RACK 4	BLU/RED	ORG/GRN	555	LP00100
54	76B BONUS RACK 5	BLU/RED	ORG/BLU	555	LP00100
55	77B BONUS RACK 6	BLU/RED	ORG/VIO	555	LP00100
56	78B BONUS RACK 7	BLU/RED	ORG/GRY	555	LP00100
57	81B BONUS RACK 8	BLU/BRN	ORG/BRN	555	LP00100
58	82B BONUS RACK 9	BLU/BRN	ORG/RED	555	LP00100
59	83B BONUS RACK 10	BLU/BRN	ORG/BLK	555	LP00100
60	84B BONUS RACK 11	BLU/BRN	ORG/YEL	555	LP00100
61	85B BONUS RACK 12	BLU/BRN	ORG/GRN	555	LP00100
62	86B BONUS RACK 13	BLU/BRN	ORG/BLU	555	LP00100
63	87B BONUS RACK 14	BLU/BRN	ORG/VIO	555	LP00100
64	88B BONUS RACK 15	BLU/BRN	ORG/GRY	555	LP00100

REF	GENERAL ILLUMINATION LAMPS	WIRE COLOR	BULB TYPE	PART NUMBER
65A	GENERAL ILLUMINATION	ORG/WHT	44	LP00104
65B	GENERAL ILLUMINATION	ORG/WHT	44	LP00104
65C	GENERAL ILLUMINATION	ORG/WHT	44	LP00104
65D	GENERAL ILLUMINATION	ORG/WHT	44	LP00104
65E	GENERAL ILLUMINATION	ORG/WHT	44	LP00104
65F	GENERAL ILLUMINATION	ORG/WHT	44	LP00104
65G	GENERAL ILLUMINATION	ORG/WHT	44	LP00104
65H	GENERAL ILLUMINATION	ORG/WHT	44	LP00104
65J	GENERAL ILLUMINATION	ORG/WHT	44	LP00104
65K	GENERAL ILLUMINATION	ORG/WHT	44	LP00104
65L	GENERAL ILLUMINATION	ORG/WHT	44	LP00104
65M	GENERAL ILLUMINATION	ORG/WHT	44	LP00104
65N	GENERAL ILLUMINATION	ORG/WHT	44	LP00104
65P	GENERAL ILLUMINATION	ORG/WHT	44	LP00104
66A	GENERAL ILLUMINATION	BLU/WHT	44	LP00104
66B	GENERAL ILLUMINATION	BLU/WHT	44	LP00104
66C	GENERAL ILLUMINATION	BLU/WHT	44	LP00104
66D	GENERAL ILLUMINATION	BLU/WHT	44	LP00104
66E	GENERAL ILLUMINATION	BLU/WHT	44	LP00104
66F	GENERAL ILLUMINATION	BLU/WHT	44	LP00104
66G	GENERAL ILLUMINATION	BLU/WHT	44	LP00104
66H	GENERAL ILLUMINATION	BLU/WHT	44	LP00104
66J	GENERAL ILLUMINATION	BLU/WHT	44	LP00104
66K	GENERAL ILLUMINATION	BLU/WHT	44	LP00104
66L	GENERAL ILLUMINATION	BLU/WHT	44	LP00104
66M	GENERAL ILLUMINATION	BLU/WHT	44	LP00104
66N	GENERAL ILLUMINATION	BLU/WHT	44	LP00104
67A	GENERAL ILLUMINATION	GRN/WHT	44	LP00104
67B	GENERAL ILLUMINATION	GRN/WHT	44	LP00104
67C	GENERAL ILLUMINATION	GRN/WHT	44	LP00104
67D	GENERAL ILLUMINATION	GRN/WHT	44	LP00104
67E	GENERAL ILLUMINATION	GRN/WHT	44	LP00104
67F	GENERAL ILLUMINATION	GRN/WHT	44	LP00104
67G	GENERAL ILLUMINATION	GRN/WHT	44	LP00104
67H	GENERAL ILLUMINATION	GRN/WHT	44	LP00104
67J	GENERAL ILLUMINATION	GRN/WHT	44	LP00104
67K	GENERAL ILLUMINATION	GRN/WHT	44	LP00104
67L	GENERAL ILLUMINATION	GRN/WHT	44	LP00104
67M	GENERAL ILLUMINATION	GRN/WHT	44	LP00104
68A	GENERAL ILLUMINATION	BLK/WHT	44	LP00104
68B	GENERAL ILLUMINATION	BLK/WHT	44	LP00104
68C	GENERAL ILLUMINATION	BLK/WHT	44	LP00104
68D	GENERAL ILLUMINATION	BLK/WHT	44	LP00104
68E	GENERAL ILLUMINATION	BLK/WHT	44	LP00104
68F	GENERAL ILLUMINATION	BLK/WHT	44	LP00104
68G	GENERAL ILLUMINATION	BLK/WHT	44	LP00104
68H	GENERAL ILLUMINATION	BLK/WHT	44	LP00104
68J	GENERAL ILLUMINATION	BLK/WHT	44	LP00104
68K	GENERAL ILLUMINATION	BLK/WHT	44	LP00104
68L	GENERAL ILLUMINATION	BLK/WHT	44	LP00104
68M	GENERAL ILLUMINATION	BLK/WHT	44	LP00104
68N	GENERAL ILLUMINATION	BLK/WHT	44	LP00104
68P	GENERAL ILLUMINATION	BLK/WHT	44	LP00104
68Q	GENERAL ILLUMINATION	BLK/WHT	44	LP00104
69	FLUORESCENT IN BACKBOX	WHT/BLK	T815W	LP00102

*NOTE: For troubleshooting, see Menu System, C. "Diagnostics", C1 "Standard Tests", C1-04 "Lamp Test".

Proprietary and confidential information, not to be disclosed or copied without the express permission of CAPCOM® COIN-OP, INC.

RUBBER RINGS

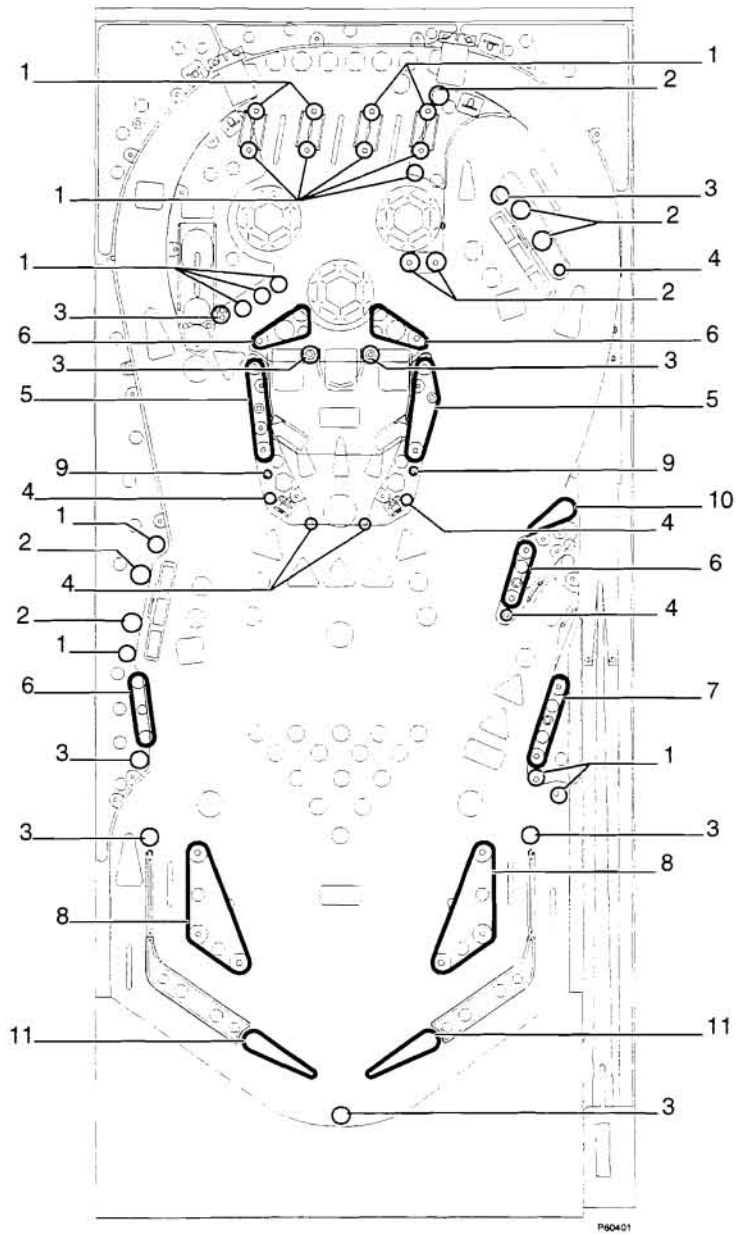

NO.	DESCRIPTION	PART NUMBER
1	RUBBER RING, 3/8" ID, BLACK	RB00108-03
2	RUBBER RING, 7/16" ID, BLACK	RB00108-04
3	BUMPER, MINI-POST, 7/16" OD, BLACK	RB00117-02
4	BUMPER, 1/2" OD .260" ID, 7/8" L, BLACK	RB00105
5	RUBBER RING, 2.0" ID, BLACK	RB00108-09
6	RUBBER RING, 1-1/4" ID, BLACK	RB00108-07
7	RUBBER RING, 1-1/2" ID, BLACK	RB00108-08
8	RUBBER RING, 2-3/4" ID, BLACK	RB00108-11
9	RUBBER RING, 3/16" ID, BLACK	RB00108-01
10	RUBBER RING, 1.0" ID 1/2" W, BLACK	RB00115-BK
11	RUBBER RING, 1-1/2" ID 1/2" W, BLACK	RB00114-BK

Proprietary and confidential information, not to be disclosed or copied without the express permission of CAPCOM® COIN-OP, INC.

PLAYFIELD RAMPS & BALL GUIDES

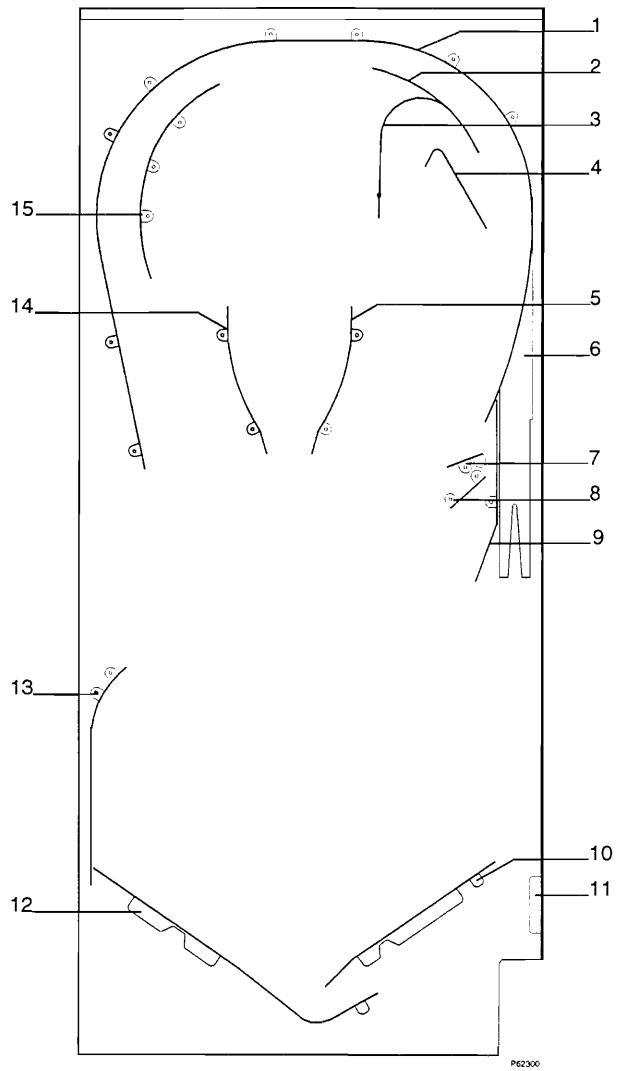

NO.	DESCRIPTION	PART NUMBER
1	ASSEMBLY, BALL GUIDE, ORBIT, OUTER	A-00598
2	ASSEMBLY, BALL GUIDE, ORBIT, INNER RIGHT	A-00600
3	ASSEMBLY, BALL GUIDE, LOOP OUTER	A-00601
4	ASSEMBLY, BALL GUIDE, LOOP, INNER	A-00602
5	ASSEMBLY, BALL GUIDE, CENTER RIGHT	A-00569-R
6	ASSEMBLY, RAMP, SHOOTER LANE	A-00608
7	BALL GUIDE, FLIPPER, SMALL	MT00555
8	BALL GUIDE, EJECT, SHORT	MT00554
9	ASSEMBLY, BALL GUIDE, EJECT, LONG	A-00603
10	ASSEMBLY, BALL GUIDE, BOTTOM ARCH RIGHT	A-00623-R
11	PLATE, STRIKE, BALL DELIVERY	MT00369
12	ASSEMBLY, BALL GUIDE, BOTTOM ARCH LEFT	A-00623-L
13	BALL GUIDE, DRAIN, LEFT	MT00556
14	ASSEMBLY, BALL GUIDE, CENTER LEFT	A-00569-L
15	ASSEMBLY, BALL GUIDE, ORBIT, INNER LEFT	A-00599

Proprietary and confidential information, not to be disclosed or copied without the express permission of CAPCOM® COIN-OP, INC.

PLAYFIELD POSTS

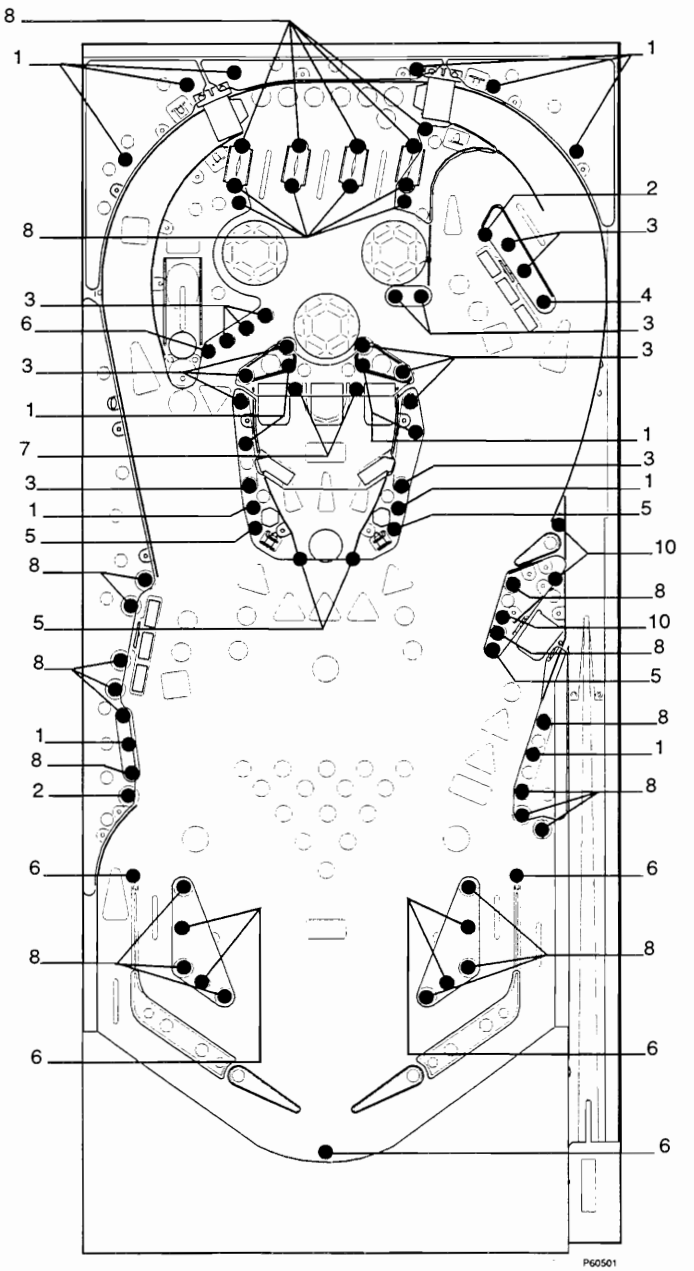

NO.	DESCRIPTION	PART NUMBER
1	POST, SINGLE, 1.000 #8 HOLE, TINT GREEN	PL00164-GT
2	POST, BUMPER, MINI, 8-32 X 3/4	SM00150-02
3	POST, BUMPER, 1.000, S/B, TINT GREEN	PL00172-GT
4	POST, BUMPER, 1.000, M-F, 7/8 X 0	SM00145-05
5	POST, BUMPER, 1.000, M-M, 7/8 X 1/2	SM00144-01
6	POST, BUMPER, MINI, #8 WS	SM00151
7	POST, BUMPER, MINI, 8-32 X 1/2	SM00150-01
8	POST, BUMPER, 1.000, S/B, TINT YELLOW	PL00172-YT
9	POST, BUMPER, 1.000, S/B, TINT RED	PL00172-RT
10	POST, SINGLE, 1.000, #8 HOLE, TINT YELLOW	PL00164-YT

Proprietary and confidential information, not to be disclosed or copied without the express permission of CAPCOM® COIN-OP, INC.

PLAYFIELD POST IDENTIFICATION

PL00164-COLOR (1.000" H)

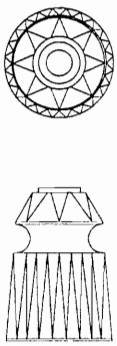

PL00172-COLOR (1.000" H)

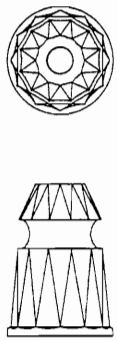

PL00197-COLOR (1.000" H)

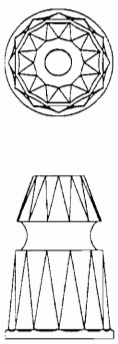

PL00198-COLOR (1.188" H)

PL00200-COLOR (1.000" H)

PL00304-COLOR (1.063" H)

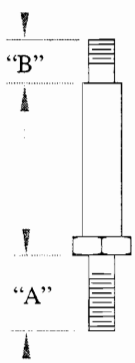

SM00144-		
DASH#	"A"	"B"
-01	.875	.50
-02	.50	.50

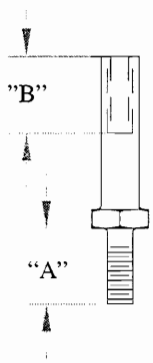

SM00145-		
DASH#	"A"	"B"
-01	.50	.50
-02	.50	0
-03	1.25	0
-04	.875	.50
-05	.875	0

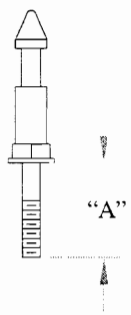

SM00150-	
DASH#	"A"
-01	.50
-02	.75

Proprietary and confidential information, not to be disclosed or copied without the express permission of CAPCOM® COIN-OP, INC.

SM00151

SM00152-		
DASH#	"A"	"B"
-01	1.00	.50
-02	.50	.50
-03	.375	.50
-04	.875	.50
-05	.750	.50

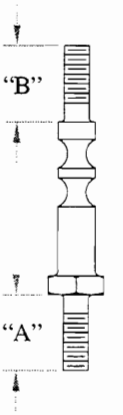

SM00153-		
DASH#	"A"	"B"
-01	.50	0
-02	.50	.50

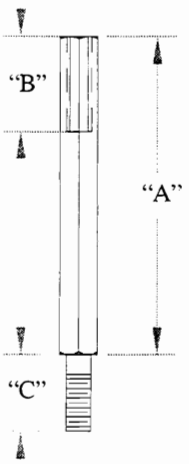

SM00154-			
DASH#	"A"	"B"	"C"
-01	1.36	.50	.50
-02	1.65	.50	.50
-03	5.19	.50	.50
-04	1.82	.50	.50
-05	1.58	.50	.50
-06	1.46	.50	.50
-07	1.36	.50	.625
-08	1.245	.50	.50
-09	3.607	.50	.50
-10	3.93	.50	.50
-11	3.264	.50	.50
-12	1.36	.50	.75

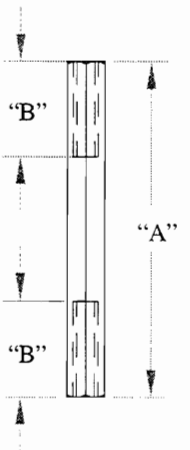

SM00155- (1/4" HEX)		
DASH#	"A"	"B"
-01	.612	.612
-02	1.36	.50
-03	1.65	.50
-04	1.06	.38

SM00176- (1/4"HEX)		
DASH#	"A"	"B"
-01	1.00	.50
-02	.50	.50
-03	.375	.50
-04	.75	.50

Proprietary and confidential information, not to be disclosed or copied without the express permission of CAPCOM® COIN-OP, INC.

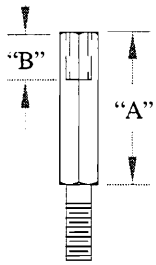

SM00229- (1/4" HEX) (6-32)		
DASH#	"A"	"B"
-01	.250	.130/.150
-02	.375	.250
-03	.500	.375
-04	.625	.375
-05	.750	.375
-06	.875	.375
-07	1.00	.375

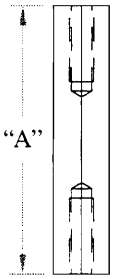

SM00235- (3/8" HEX)	
DASH#	"A"
-01	.544 +.01/-.00
-02	4.94 +.00/-.01
-03	2.68 +.01/-.00
-04	2.62 +.00/-.01
-05	2.50 +.00/-.01

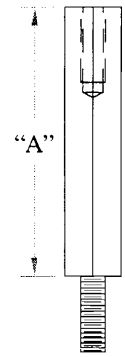

SM00236- (3/8" HEX)	
DASH#	"A"
-01	3.85 +.01/-.00
-02	2.66 +.01/-.00

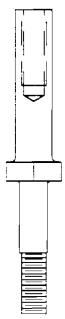

SM00237

Proprietary and confidential information, not to be disclosed or copied without the express permission of CAPCOM® COIN-OP, INC.

PLAYFIELD & CABINET SWITCHES & OPTOS

REF. NO.	DESCRIPTION	SWITCH P/N
*1	COIN DOOR-CHUTE 1	**
*2	COIN DOOR-CHUTE 2	**
*3	COIN DOOR-CHUTE 3	**
*4	COIN DOOR-CHUTE 4	**
*5	LEFT FLIPPER	SW00127
*6	RIGHT FLIPPER	SW00127
*7	START BUTTON	SW00130
*8	COIN DOOR OPEN (MODE)	SW00132
*9	COIN DOOR-SLAM	SW00121
10-20	NOT USED	
*21	UPPER RIGHT FLIPPER	SW00127
22-29	NOT USED	
*30	TILT BOB	A-00065-1
31	NOT USED	

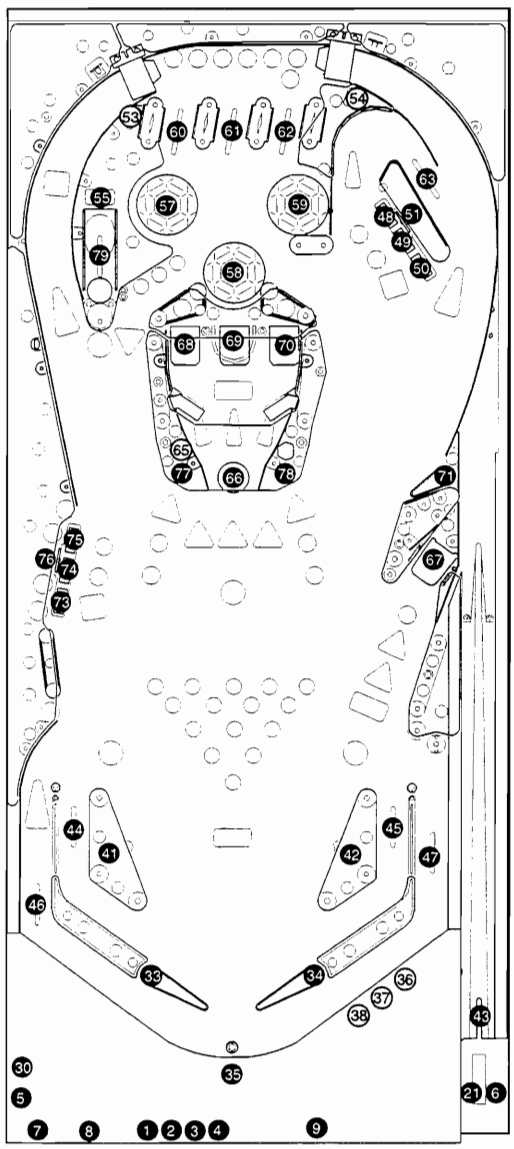

REF. NO.	DESCRIPTION	SWITCH P/N	OPTO RECEIVER P/N	OPTO XMTR. P/N
32	NOT USED			
33	LEFT FLIPPER E.O.S.	SW00127		
34	RIGHT FLIPPER E.O.S.	SW00127		
35	OUTHOLE	SW00113		
36	BALL TROUGH 1 (OPTO)		A0015604-3R	A0015702-3R
37	BALL TROUGH 2 (OPTO)		A0015604-3R	A0015702-3R
38	BALL TROUGH 3 (OPTO)		A0015604-3R	A0015702-3R
39-40	NOT USED			
41	LEFT SLINGSHOT	SW00138		
42	RIGHT SLINGSHOT	SW00138		
43	SHOOTER LANE	SW00112		
44	LEFT INLANE	SW00111		
45	RIGHT INLANE	SW00111		
46	LEFT OUTLANE	SW00112		
47	RIGHT OUTLANE	SW00111		
48	NOT USED			
49	RIGHT DROP (LEFT)	SW00106		
50	RIGHT DROP (CENTER)	SW00106		
51	RIGHT DROP (RIGHT)	SW00106		
52	RIGHT DROP (STANDUP)	SW00141		
53	LEFT ORBIT (OPTO)		A0020800-S	A0020901
54	RIGHT ORBIT (OPTO)		A0020800-S	A0020901
55	CAPTIVE BALL (STANDUP)	SW00141		
56	NOT USED			
57	LEFT STAR BUMPER	SW00126		
58	CENTER STAR BUMPER	SW00126		
59	RIGHT STAR BUMPER	SW00126		
60	LEFT TOP LANE	SW00111		
61	CENTER TOP LANE	SW00111		
62	RIGHT TOP LANE	SW00111		
63	BANKSHOT LANE	SW00111		
64	NOT USED			
65	CENTER POCKET (OPTO)		A0021300	A0022601
66	CENTER POST	SW00118		
67	BONUS SAUCER	SW00118		
68	CENTER POCKET (LEFT)	SW00139		
69	CENTER POCKET (CENTER)	SW00139		
70	CENTER POCKET (RIGHT)	SW00139		
71	UPPER FLIPPER E.O.S.	SW00127		
72	NOT USED			
73	LEFT DROP (LEFT)	SW00106		
74	LEFT DROP (CENTER)	SW00106		
75	LEFT DROP (RIGHT)	SW00106		
76	LEFT DROP (STANDUP)	SW00141		
77	LEFT LITE SUPER QUE	SW00140		
78	RIGHT LITE SUPER QUE	SW00140		
79	CAPTIVE ROLLOVER	SW00111		
80	NOT USED			

*NOTE: Switch is located in cabinet.
**NOTE: Not serviced separately.

Proprietary and confidential information, not to be disclosed or copied without the express permission of CAPCOM® COIN-OP, INC.

PLAYFIELD OPTO BOARDS

RECEIVERS

A0020800-S

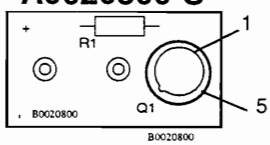

A0022601

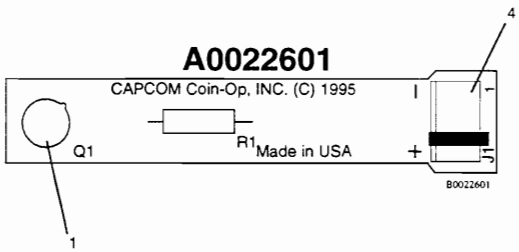

A0015604-3R

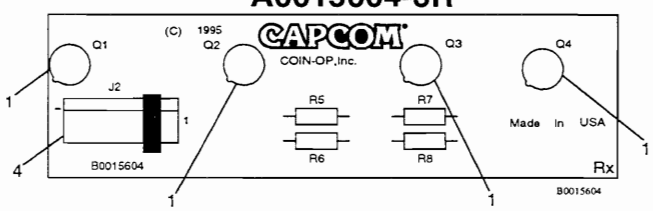

TRANSMITTERS

A0020901

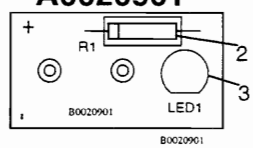

A0021300

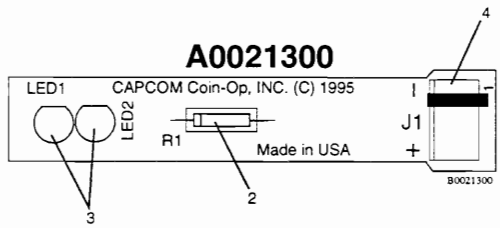

A0015702-3R

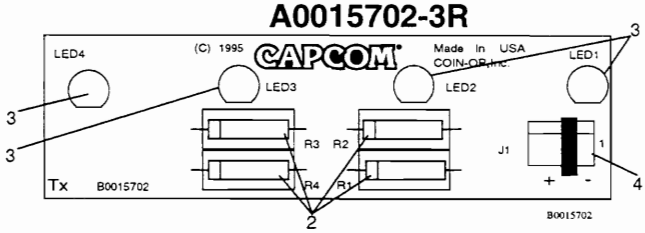

P600749

REF.	DESCRIPTION	COMPONENT PART NUMBER	OPTO BOARD ASSEMBLY P/N & COMPONENT QUANTITY					
			A0020800-S	A0020901	A0022601	A0021300	A0015604-3R	A0015702-3R
1	TRANSISTOR 21T313 NPN PHOTO	TR00104	1			1	3	
2	RESISTOR CF 1W 5% 330 OHM	RS00112-04		1	1			3
3	IRED 21E187 100 MA T-1 3/4	DI00103		1	2			3
4	CONNECTOR HEADER .100 R/A 7-PIN	CN00137-07					1	
4	CONNECTOR HEADER .100 R/A 4-PIN	CN00137-04			1	1		1
5	SHROUD	PL00284	1					

Proprietary and confidential information, not to be disclosed or copied without the express permission of CAPCOM® COIN-OP, INC.

PLAYFIELD AND BACKBOX: SOLENOIDS, AND FLASHERS

REF.	DESCRIPTION	PART NUMBER
1	S1 OUTHOLE	CL00109
2	S2 TROUGH	CL00109
3	S3 KNOCKER	CL00109
4	S4 LEFT SLINGSHOT	CL00109
5	S5 RIGHT SLINGSHOT	CL00109
6	S6 KICKER	CL00109
7	S7 RIGHT DROP RESET	CL00109
8	S8 BONUS SAUCER	CL00109
9	S9 LEFT FLIPPER	CL00111
10	S10 RIGHT FLIPPER	CL00111
11	S11 UPPER RIGHT FLIPPER	CL00111
12	S12 CENTER POST UP	CL00109
13	S13 LEFT DROP RESET	CL00109
14	S14 CENTER POST DOWN	CL00109
15	S15 RIGHT TOPGATE	CL00112
16	S16 LEFT TOP GATE	CL00112
17	NOT USED	----------
18	NOT USED	----------
19	NOT USED	----------
20	NOT USED	----------
21	NOT USED	----------
22	NOT USED	----------
23	NOT USED	----------
24	NOT USED	----------
25	S25 CENTER POCKET LEFT	CL00109
26	S26 CENTER POCKET CENTER	CL00109
27	NOT USED	----------
28	S28 CENTER POCKET FLASH	LP00103
29	S29 RIGHT STAR BUMPER	CL00109
30	S30 CENTER STAR BUMPER	CL00109
31	S31 LEFT STAR BUMPER	CL00109
32	S32 CENTER POCKET RIGHT	CL00109

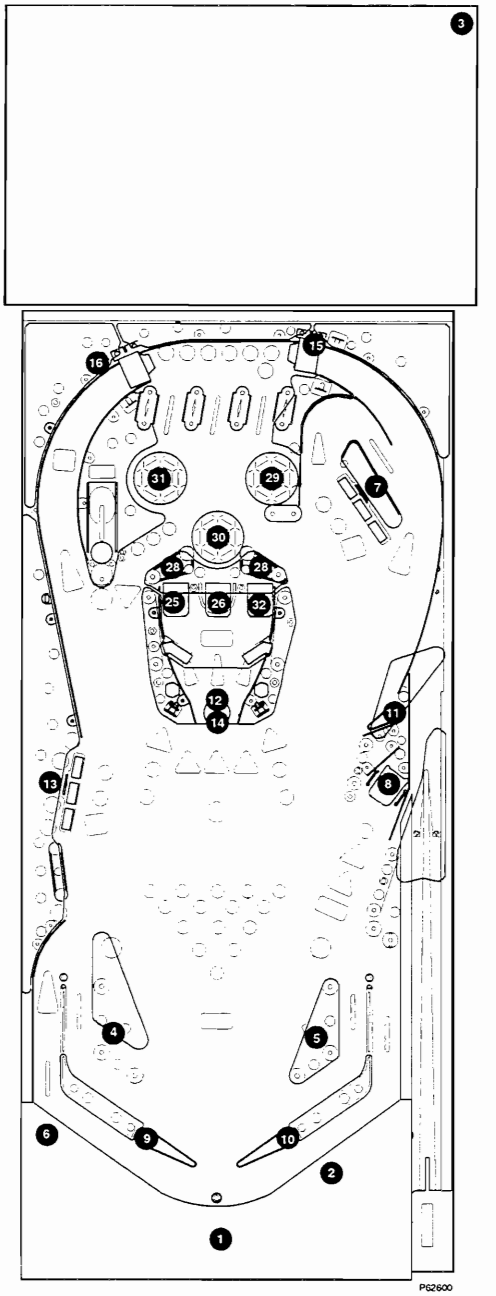

Proprietary and confidential information, not to be disclosed or copied without the express permission of CAPCOM® COIN-OP, INC.

NOTES

Proprietary and confidential information, not to be disclosed or copied without the express permission of CAPCOM® COIN-OP, INC.

PLAYFIELD PLASTICS

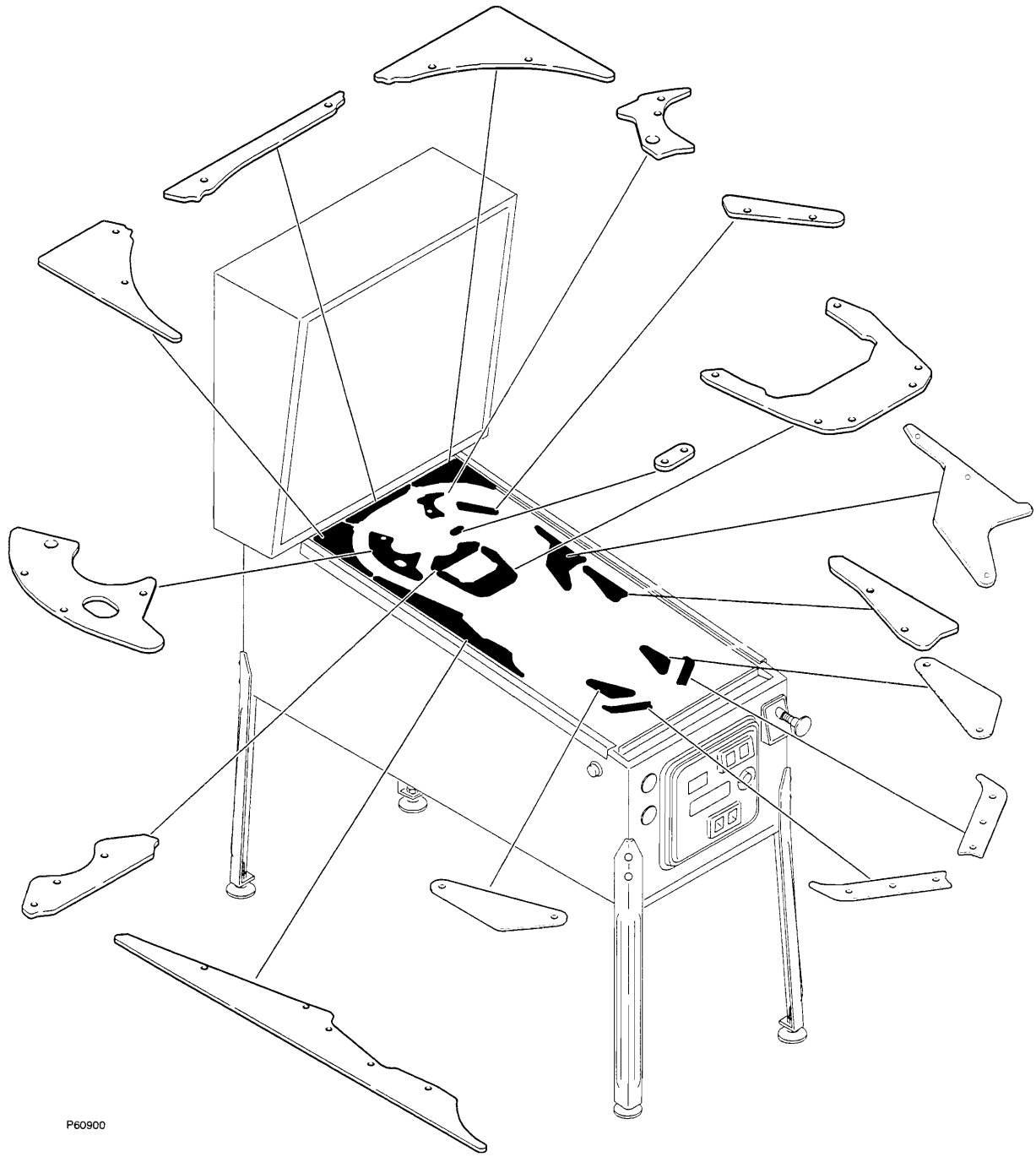

Proprietary and confidential information, not to be disclosed or copied without the express permission of CAPCOM® COIN-OP, INC.

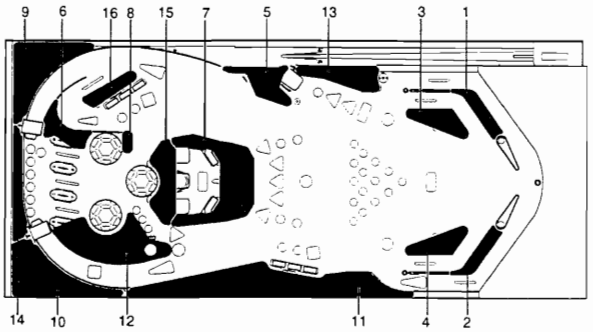

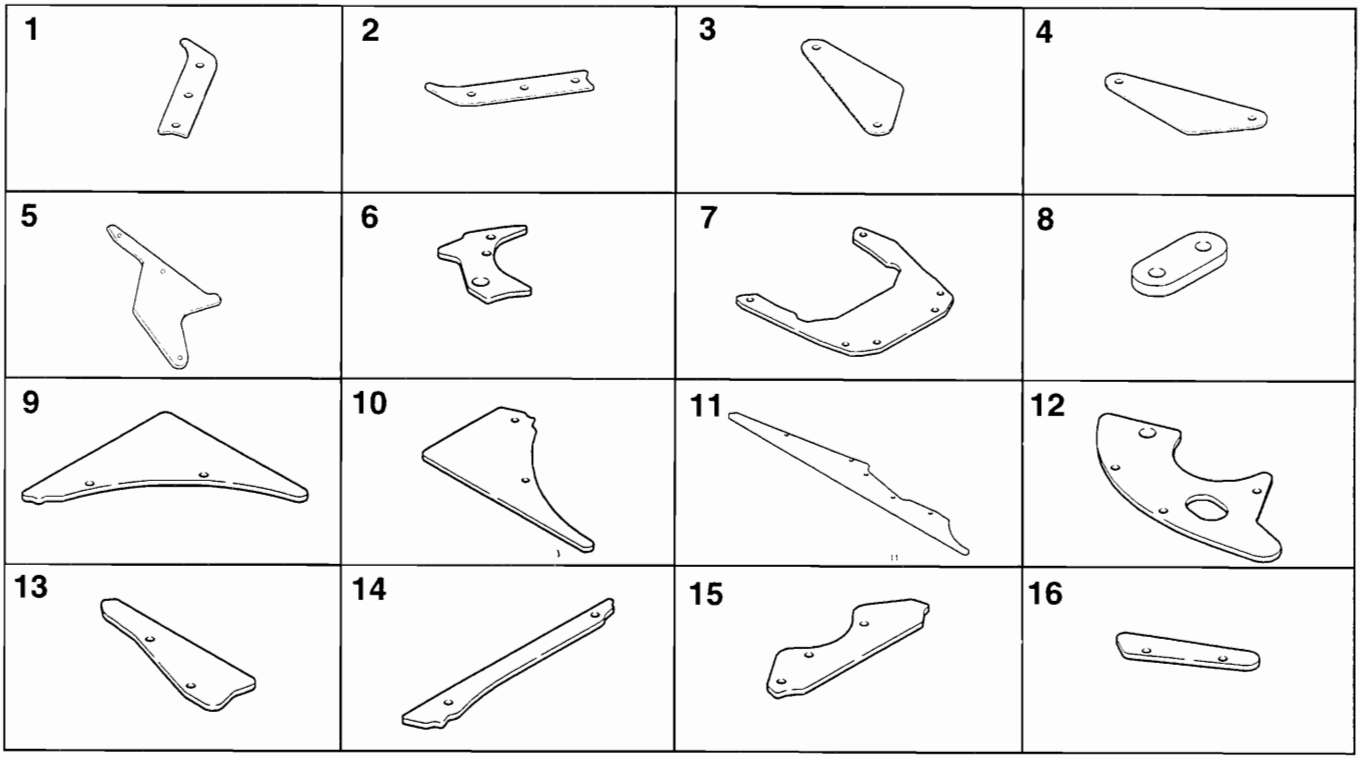

NO.	PART NUMBER	DESCRIPTION	REQ.
1	AW00168-1	PLASTIC, DRAIN LANE, RIGHT	1
2	AW00168-2	PLASTIC, DRAIN LANE, LEFT	1
3	AW00168-3	PLASTIC, SLINGSHOT, RIGHT	1
4	AW00168-4	PLASTIC, SLINGSHOT, LEFT	1
5	AW00168-5	PLASTIC, CORNER POCKET	1
6	AW00168-6	PLASTIC, RIGHT LANE, TOP	1
7	AW00168-7	PLASTIC, BREAKSHOT HORSESHOE	1
8	AW00168-8	PLASTIC, STAR BUMPER, RIGHT / FRONT	1
9	AW00168-9	PLASTIC, TOP RIGHT	1
10	AW00168-10	PLASTIC, TOP LEFT	1
11	AW00168-11	PLASTIC, CUE-STICK, LEFT SIDE	1
12	AW00168-12	PLASTIC, COVER, CAPTIVE BALL	1
13	AW00168-13	PLASTIC, RACK-EM UP, BOTTOM-RIGHT	1
14	AW00168-14	PLASTIC, TOP CENTER	1
15	AW00168-15	PLASTIC, CENTER POCKETS	1
16	AW00168-16	PLASTIC, BANK, UPPER RIGHT	1

Proprietary and confidential information, not to be disclosed or copied without the express permission of CAPCOM® COIN-OP, INC.

NOTES

Proprietary and confidential information, not to be disclosed or copied without the express permission of CAPCOM® COIN-OP, INC.

COMPONENT IDENTIFICATION - PLAYFIELD MECHANISMS

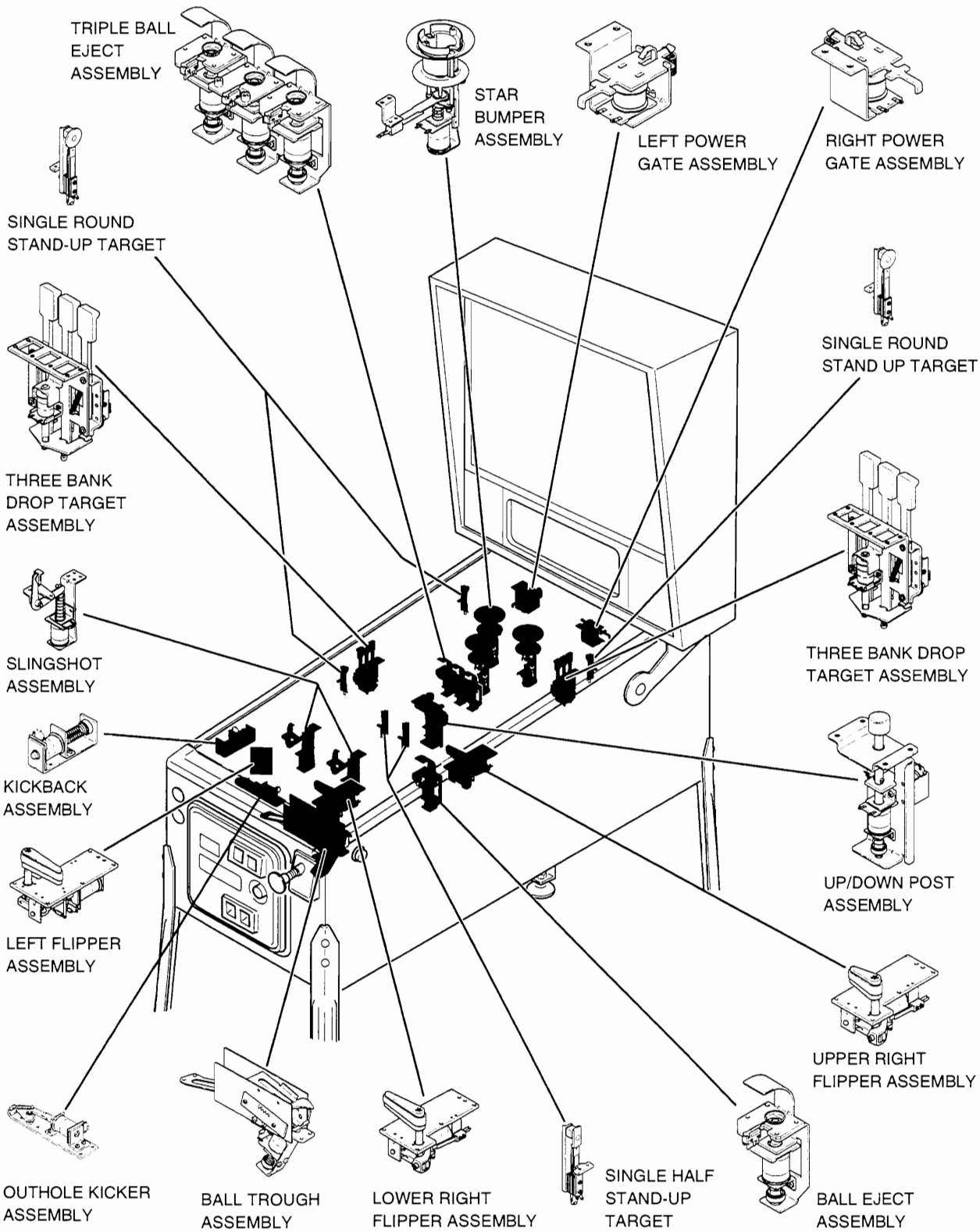

P620

Proprietary and confidential information, not to be disclosed or copied without the express permission of CAPCOM® COIN-OP, INC.

FLIPPER ASSEMBLIES

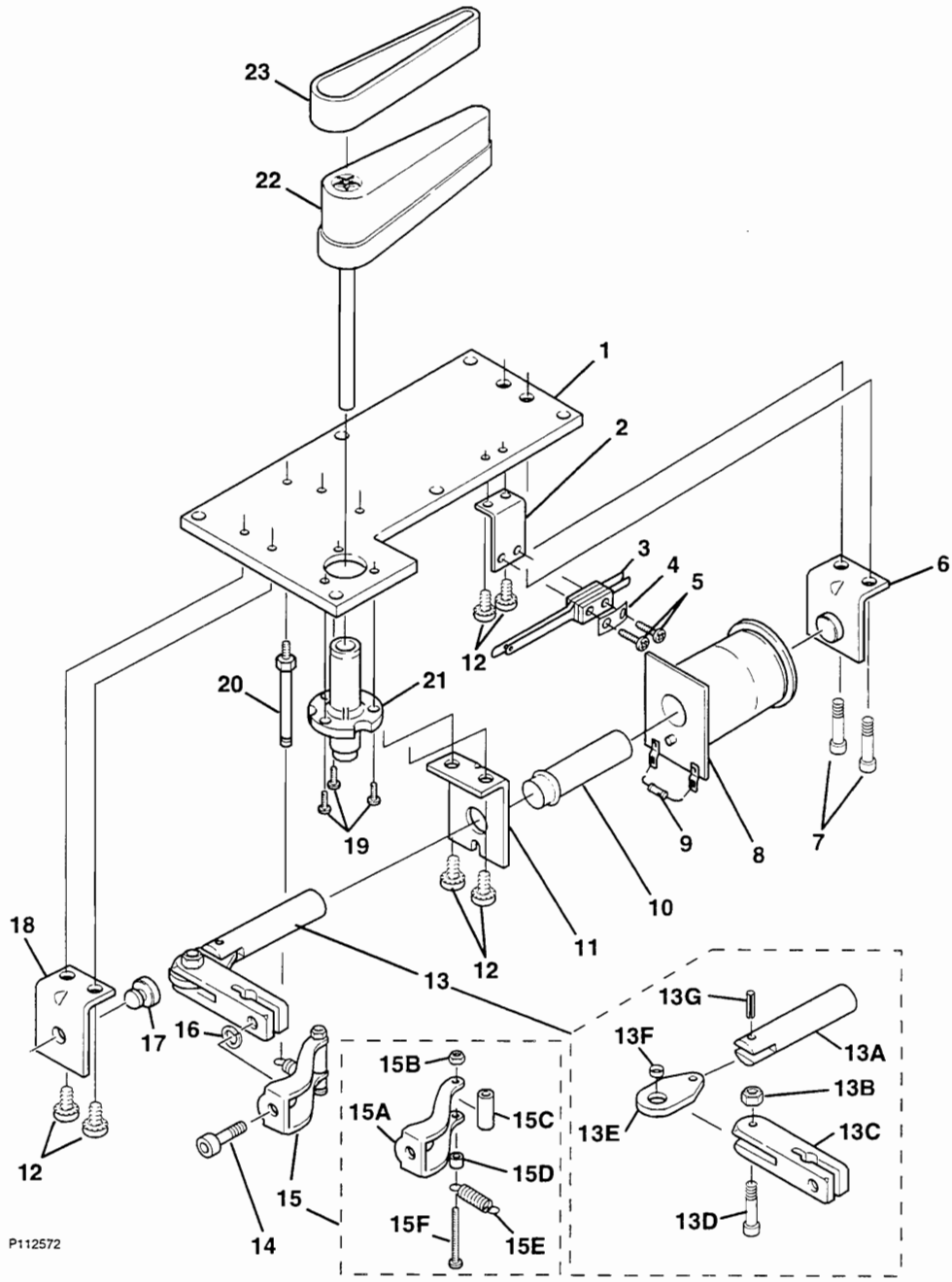

Proprietary and confidential information, not to be disclosed or copied without the express permission of CAPCOM® COIN-OP, INC.

FLIPPER ASSEMBLIES

Ref.	Part Number	Description	Quantity Required		
			Left	Lower Right	Upper Right
	A-00155-R-D	ASSEMBLY, RIGHT FLIPPER			
	A-00155-L-D	ASSEMBLY, LEFT FLIPPER			
		left and right assembliesconsist of the following parts:			
1	MT00388	BASE PLATE	1	1	1
2	MT00392	BRACKET, SWITCH MOUNTING	1	1	1
3	SW00127	SWITCH, LEAF	1	1	1
4	MT00461-1	PLATE, SWITCH	1	1	1
5	SC00100-05	SCREW, MACHINE, 6-32 X 5/8 PPH SEMS ZC	2	2	2
6	A-00378	ASSEMBLY, BRACKET, COIL STOP	1	1	1
7	SC00169-26	SCREW, CAP, 1/4-20 X 5/16 SH ALLOY, BLACK	2	2	2
8	CL00111	COIL 1100T #22	1	1	1
9	DI00100	DIODE, 1N4004 1.0A 400 VR	1	1	1
10	PL00132-05	SLEEVE, COIL 2.218 L	1	1	1
11	MT00390	BRACKET, COIL RETAINING	1	1	1
12	SC00101-02	SCREW, MACHINE, 8-32 X 1/4 PPH SEMS ZC	6	6	6
13	A-00429-1R	ASSEMBLY, PLUNGER/LINK/CLAMP- RIGHT		1	1
13	A-00429-1L	ASSEMBLY, PLUNGER/LINK/CLAMP- LEFT	1		
		both assemblies consist of the following parts:			
13A	SM00183	PLUNGER	1	1	1
13B	NT00104-11	NUT, 10-32 STOP, NYLON ZC	1	1	1
13C	MT00394	CLAMP, SHAFT	1	1	1
13D	SC00135-06	SCREW, CAP, 10-32 X 3/4 SH ALLOY ZC	1	1	1
13E	PL00202-1	LINK, PLUNGER	1	1	1
13F	SM00184	BUSHING, PLUNGER LINK	1	1	1
13G	RP00102-01	PIN, ROLL 5/32 X 3/8	1	1	1
14	SC00135-05	SCREW, CAP, 10-32 X 5/8 SH ALLOY ZC	1	1	1
15	A-00425-2R	ASSEMBLY, ACTUATOR-RIGHT		1	1
15	A-00425-2L	ASSEMBLY, ACTUATOR-LEFT	1		
		both assemblies consist of the following parts:			
15A	MT00393-2	BRACKET, SPRING MOUNTING	1	1	1
15B	NT00109-04	NUT, 4-40 STOP, NYLON ZC, THIN	1	1	1
15C	PL00288-1	BUSHING, ROLLER	1	1	1
15D	SM00225	BUSHING, SPRING, EOS	1	1	1
15E	SG00111	SPRING, EXT., .240 X .834" L	1	1	1
15F	SC00171-27	SCREW, MACHINE, 4-40 X 1 1/16 PPH ZC	1	1	1
16	WS00102-10	WASHER, LOCK #10 SPLIT	1	1	1
17	RB00103	BUMPER, BUTTON 5/8 D X 1/8 H	1	1	1
18	MT00389	BRACKET, PLUNGER SUPPORT	1	1	1
19	SC00100-26	SCREW, MACHINE, 6-32X 5/16 PPH SEMS ZC	3	3	3
20	SM00191	POST, SPRING MOUNTING	1	1	1
21	PL00264	BUSHING, FLIPPER	1	1	1
*22	A-00217-BK	ASSEMBLY, FLIPPER BAT, 3.0" YELLOW	1	1	
*22	A-00475-Y	ASSEMBLY, FLIPPER BAT, 2.2" YELLOW			1
*23	RB00114-BK	RUBBER RING, 1-1/2" ID 1/2"W, BLACK	1	1	
*23	RB00115-BK	RUBBER RING, 1/2" ID 1/2"W, BLACK			1

*NOTE: REFERENCE ONLY- NOT INCLUDED IN ASSEMBLIES SHOWN. MUST BE ORDERED SEPARATELY.

Proprietary and confidential information, not to be disclosed or copied without the express permission of CAPCOM® COIN-OP, INC.

THREE BANK DROP TARGET ASSEMBLY

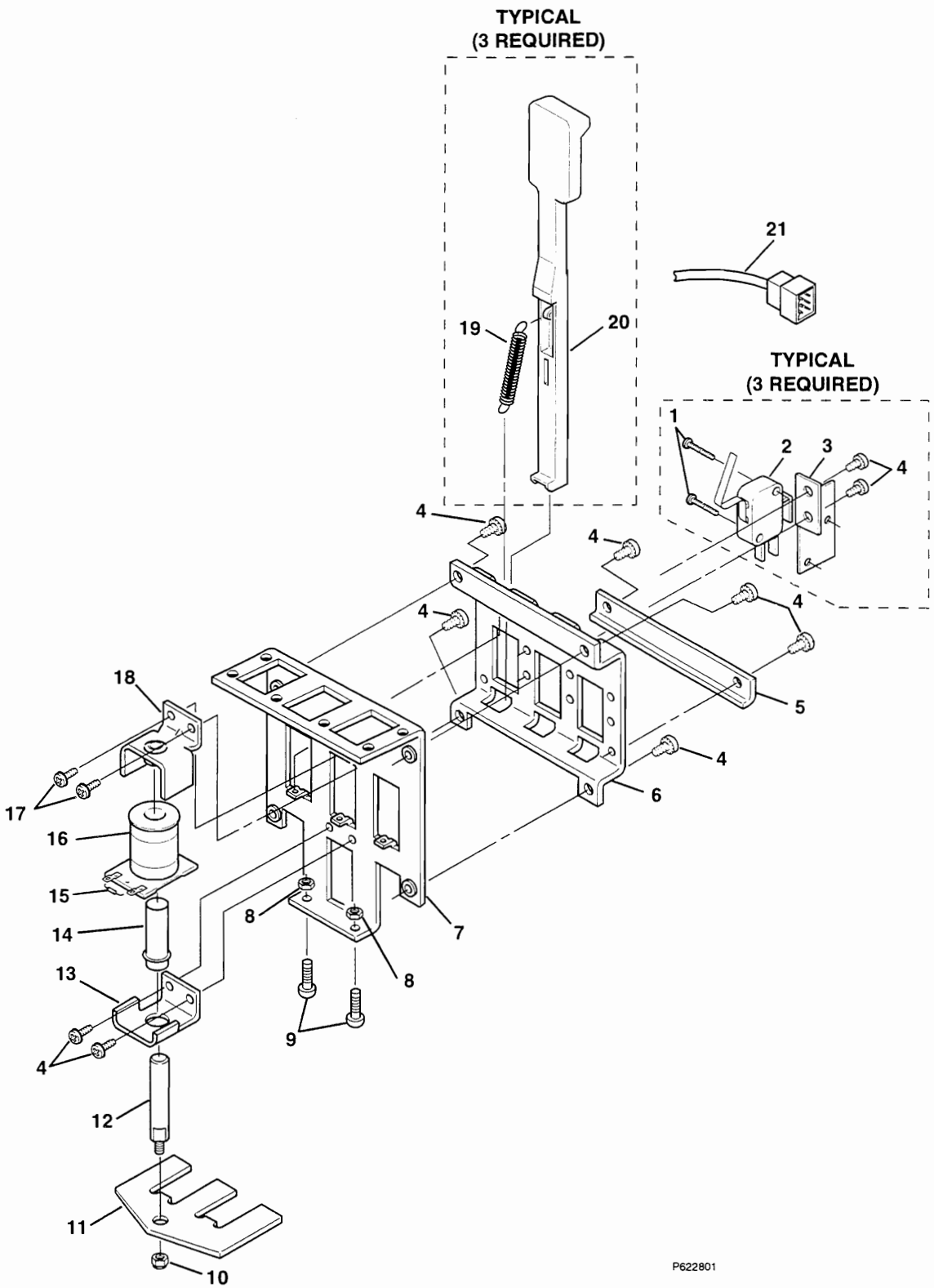

Proprietary and confidential information, not to be disclosed or copied without the express permission of CAPCOM® COIN-OP, INC.

THREE BANK TARGET ASSEMBLY

No.	Part Number	Description	Req.
	A-00153	ASSEMBLY, 3 BANK DROP TARGET *consists of the following parts:*	
1	SC00120-05	SCREW, MACHINE, 4-40 X 5/8 PPH SEMS ZC	6
2	SW00106	SWITCH, MICRO, WITH ACTUATOR	3
3	MT00212	BRACKET, MICRO SWITCH MOUNTING	3
4	SC00101-02	SCREW, MACHINE, 8-32 X 1/4 PPH SEMS ZC	14
5	MT00210	BRACKET, RETAINING	1
6	MT00213	BRACKET, GUIDE	1
7	A-00158	ASSEMBLY, SUB, MAIN BRACKET	1
8	NT00104-08	NUT, 8-32 STOP NYLON INS ZC	2
9	SC00146-05	SCREW, MACHINE, 8-32 X 5/8 PPH ZC	2
10	NT00104-11	NUT, 10-32 STOP NYLON INS ZC	1
11	MT00209	PLATE, LIFTER	1
12	SM00118-01	PLUNGER WITH STUD, 2.47L	1
13	MT00208	BRACKET, COIL MOUNTING	1
14	PL00133-03	SLEEVE, COIL, 2.094"L WITH .188 EXT	1
15	DI00100	DIODE, 1N4004 RECTIFIER 1.0A 400VR	1
16	CL00109	COIL, 800T #23	1
17	SC00102-03	SCREW, MACHINE, 10-32 X 3/8 PPH SEMS ZC	2
18	A-00159	ASSEMBLY, BRACKET, PLUNGER STOP	1
19	SG00117	SPRING, EXT., .250 X .440 .16D WIRE	3
20	PL00325-W	TARGET, DROP, WHITE	3
21	C-00239	CABLE	1

Proprietary and confidential information, not to be disclosed or copied without the express permission of CAPCOM® COIN-OP, INC.

STAR BUMPER ASSEMBLY

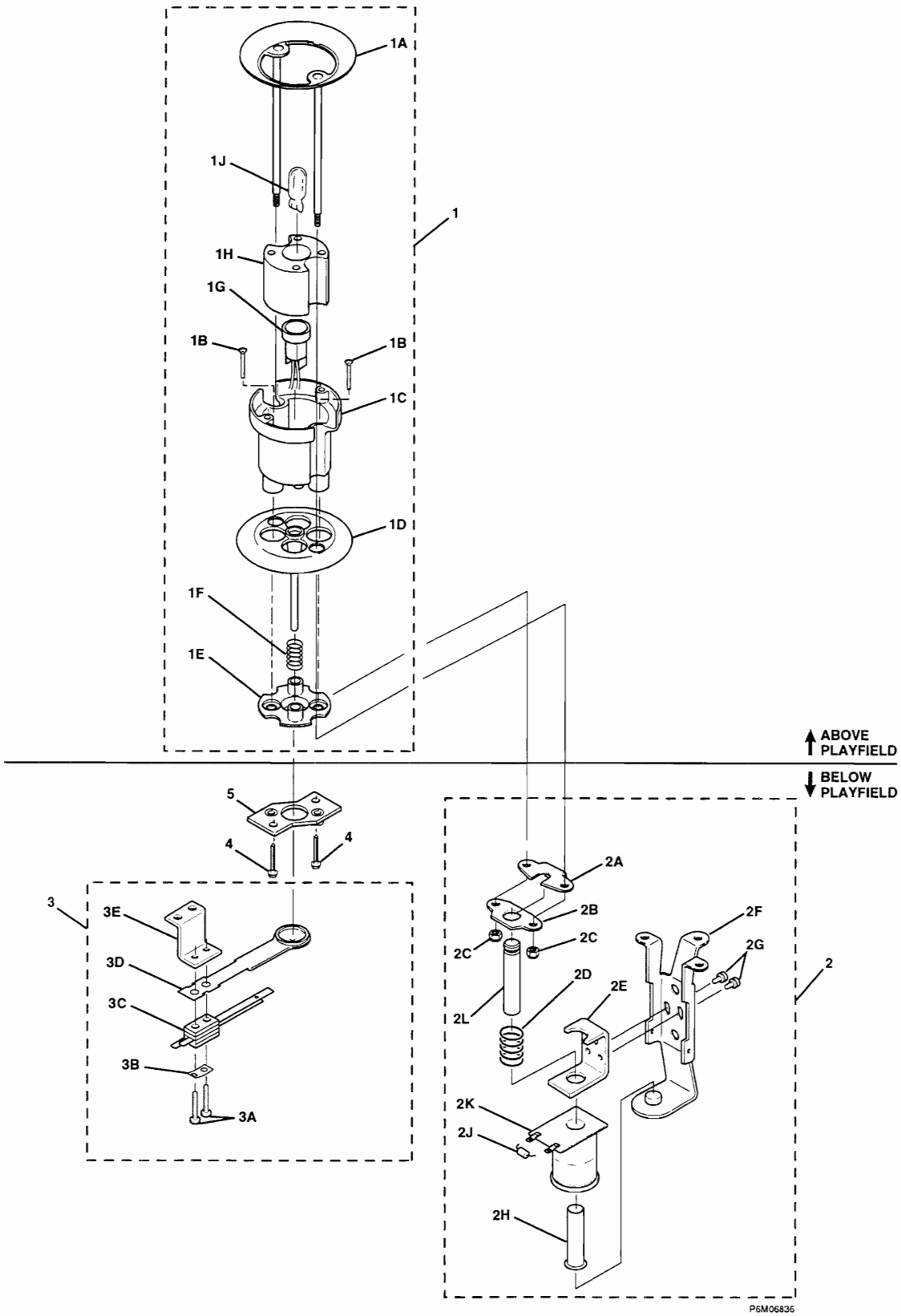

Proprietary and confidential information, not to be disclosed or copied without the express permission of CAPCOM® COIN-OP, INC.

STAR BUMPER ASSEMBLY

No.	Part Number	Description	Req.
	K-012	KIT, STAR BUMPER, COMPLETE	
		consists of the following parts:	
1	A-00376-W	ASSEMBLY, STAR BUMPER	1
		consists of the following parts:	
1A	A-00374	ASSEMBLY, RING, STAR BUMPER	1
*1B	SC00117-09	SCREW, MACHINE, 4-40 X 1 1/8 PFH ZC	2
1C	PL00265	BODY	1
1D	PL00229-W	SKIRT, WHITE	1
1E	PL00261	WAFER	1
1F	SG00115	SPRING, 6 TURNS	1
*1G	SK00113	SOCKET, LAMP, WEDGE, WITH 12.0" LEADS	1
*1H	MS00172	MOUNT, SHOCK, LAMP	1
*1J	LP00100	LAMP, #555 6.3V WEDGE T-3 1/4	1
2	A-00375	ASSEMBLY, COIL & BRACKET, STAR BUMPER	1
		consists of the following parts:	
2A	MT00379	PLUNGER, LINK, METAL	1
2B	FB00104	PLUNGER, LINK, FIBER	1
2C	NT00104-06	NUT, 6-32 STOP NYLON INS ZC	2
2D	SG00114	SPRING, 5 TURNS	1
2E	MT00380	BRACKET, COIL RETAINING	1
2F	A-00373	ASSEMBLY, SUB, COIL BRACKET	1
2G	SC00131-02	SCREW, MACHINE, 6-32 X 1/4 SLHWH ZC	2
2H	PL00132-01	SLEEVE, COIL, 1.745L	1
2J	DI00100	DIODE, 1N4004 RECTIFIER 1.0A 400VR	1
2K	CL00109	COIL, 800T #23	1
2L	SM00179	PLUNGER	1
3	A-00381	ASSEMBLY, SWITCH, STAR BUMPER	1
		consists of the following parts:	
3A	SC00100-05	SCREW, MACHINE, 6-32 X 5/8 PPH SEMS ZC	2
3B	MT00461-1	PLATE, SWITCH	1
3C	SW00126	SWITCH, LEAF	1
3D	PL00263	ACTUATOR, LEAF SWITCH	1
3E	MT00384	BRACKET, SWITCH MOUNTING	1
4	SC00121-04	SCREW, WOOD #6 X 1/2	2
5	A-00648	PLATE, SUPPORT	1

*NOTE: REFERENCE ONLY - NOT INCLUDED IN ASSEMBLIES SHOWN. MUST BE ORDERED SEPARATELY.

Proprietary and confidential information, not to be disclosed or copied without the express permission of CAPCOM® COIN-OP, INC.

BALL TROUGH ASSEMBLY

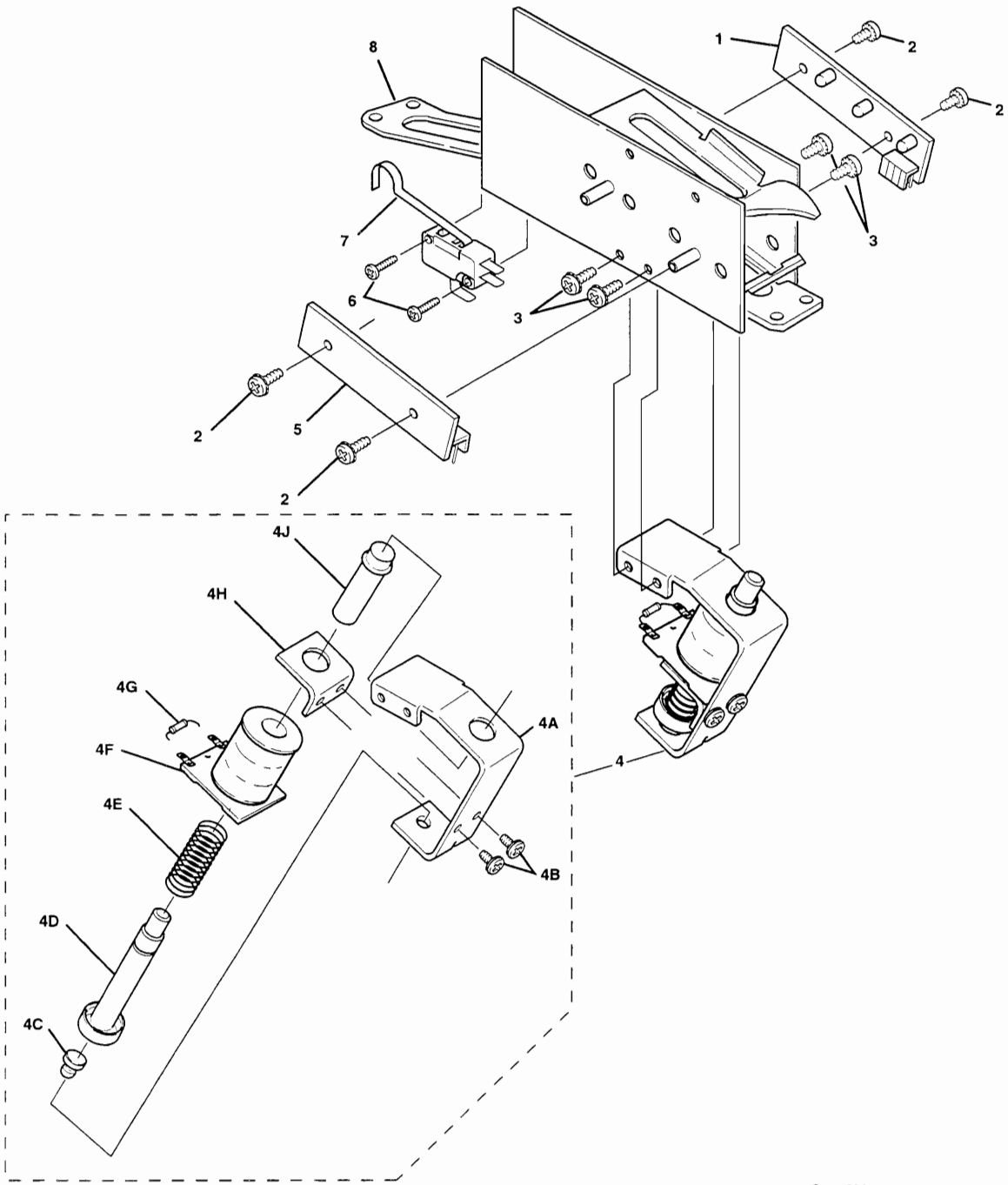

Proprietary and confidential information, not to be disclosed or copied without the express permission of CAPCOM® COIN-OP, INC.

BALL TROUGH ASSEMBLY, 3 BALLS

No.	Part Number	Description	Req.
	A-00411-3R	ASSEMBLY, BALL TROUGH, 3 BALLS	
		consists of the following parts:	
1	*A0015702-3R	ASSEMBLY, OPTO, TRANSMITTER	1
2	SC00100-04	SCREW, MACHINE, 6-32 X 1/4 PPH SEMS ZC	4
3	SC00101-03	SCREW, MACHINE, 8-32 X 3/8 PPH SEMS ZC	4
4	A-00371	ASSEMBLY, KICKER, BALL TROUGH	1
		consists of the following parts:	
4A	MT00378	BRACKET, KICKER ASSEMBLY	1
4B	SC00101-02	SCREW, MACHINE, 8-32 X 1/4 PPH SEMS ZC	2
4C	RB00103	BUTTON, RUBBER	1
4D	A00369	ASSEMBLY, PLUNGER/TIP	1
4E	SG00103	SPRING, COMP.	1
4F	CL00109	COIL, 8000T #23	1
4G	DI00100	DIODE, 1N4004 RECTIFIER 1.0A 400VR	1
4H	MT00191	BRACKET, COIL RETAINING	1
4J	PL00133-05	SLEEVE, COIL 1.880L WITH .188 EXT	1
5	*A0015603-3R	ASSEMBLY, OPTO, RECEIVER	1
6	SC00120-06	SCREW, MACHINE, 4-40 X 3/4 PPH SEMS ZC	2
7	SW00113	SWITCH, MICRO, WITH ACTUATOR	1
8	A-00370	ASSEMBLY, SUB, TROUGH WELDMENT	1

*NOTE: REFERENCE ONLY- NOT INCLUDED IN ASSEMBLIES SHOWN. MUST BE ORDERED SEPARATELY.

Proprietary and confidential information, not to be disclosed or copied without the express permission of CAPCOM® COIN-OP, INC.

UP/DOWN POST ASSEMBLY

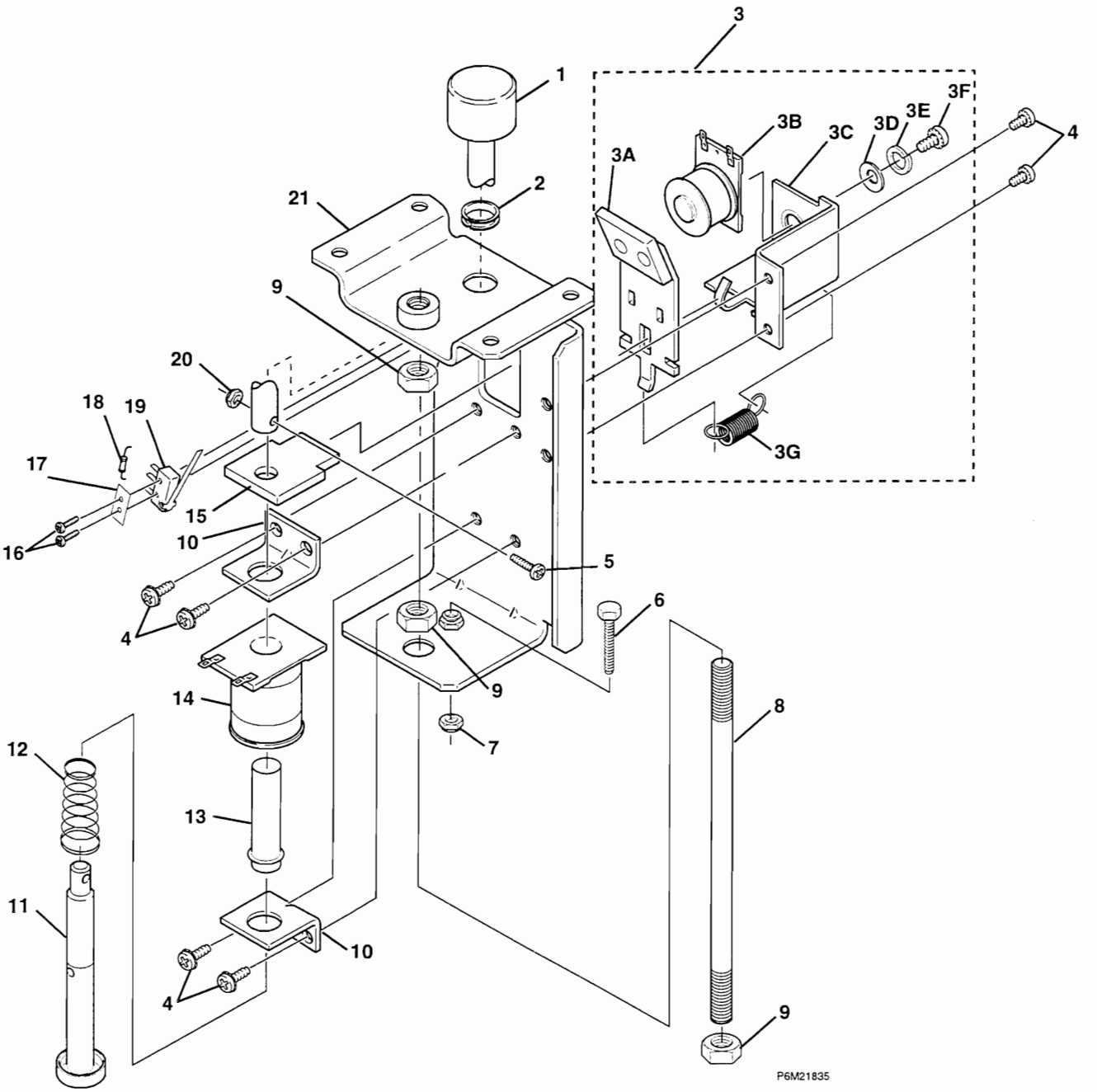

Proprietary and confidential information, not to be disclosed or copied without the express permission of CAPCOM® COIN-OP, INC.

UP/DOWN POST ASSEMBLY

No.	Part Number	Description	Req.
	A-00620-D	ASSEMBLY, UP-DOWN POST	
		consists of the following parts:	
1	SM00243	POST	1
2	PL00127-06	NYLINER, 1/2"D SHAFT, 0.140L	1
3	A-00621	ASSEMBLY, ACTUATOR/RELAY	1
		consists of the following parts:	
3A	A-00617	ASSEMBLY, ACTUATOR	1
3B	CL00112	COIL, 600T #26 MINI	1
3C	A-00572-L	ASSEMBLY, BRACKET, COIL, POWER GATE, LEFT	1
3D	WS00110-08	WASHER, LOCK 38 SPLIT BRONZE	1
3E	WS00109-15	WASHER, FLAT #8, .0438OD, .064T BRASS	1
3F	SC00141-03	SCREW, MACHINE, 8-32 X 3/5 SLPH BRASS	1
3G	SG00126	SPRING, EXT, .200OD	1
4	SC00101-02	SCREW, MACHINE, 8-32 X .25 L PHP SEMS	6
5	SC00178-06	SCREW, CAP, 6-32 X 3/4 SH STL ALLOY BLK	1
6	SC00161-06	SCREW, MACHINE, 1/4-20 X 3/4 HH FT ZC	1
7	NT00104-12	NUT, 1/4-20 STOP NYLON INS ZC	1
8	SM00247	STUD, THREADED, 1/4-20 X 6-1/2 ZC	1
9	NT00101-12	NUT, 1/4-20 KEPS HEX	3
10	MT00566	BRACKET, COIL RETAINING, .625 #8 X .750	2
11	A-00618	ASSEMBLY, PLUNGER & TIP	1
12	SG00105	SPRING, COMP., .700 X 1.625 CONICAL	1
13	PL00133-05	SLEEVE, COIL, 1.88L WITH .188' EXTENSION	1
14	CL00109	COIL, 800T #23	1
15	PL00333	PLATE, LOCK	1
16	SC00157-04	SCREW, MACHINE, 2-56 X 1/2 PPH SEMS ZC	2
17	MT00491	PLATE, SWITCH, #4 X .375	1
18	DI00100	DIODE, 1N4004 RECTIFIER 1.0A 400VR	1
19	SW00118-D	SWITCH, MICRO, WITH ACTIVATOR, 1.500L	1
20	NT00104-06	NUT, 6-32 STOP NYLON INS ZC	1
21	A-00619	ASSEMBLY, BRACKET, MAIN	1

Proprietary and confidential information, not to be disclosed or copied without the express permission of CAPCOM® COIN-OP, INC.

SLINGSHOT ASSEMBLY

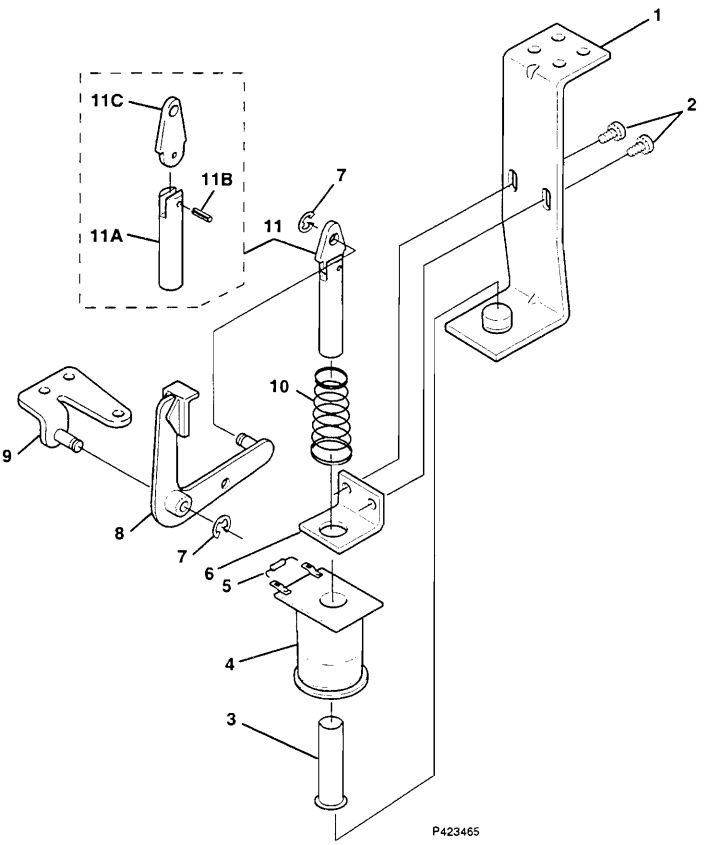

SLINGSHOT ASSEMBLY			
No.	Part Number	Description	Req.
	A-00540-1	ASSEMBLY, SLINGSHOT, STANDARD	
		consists of the following parts:	
1	A-00537	ASSEMBLY, BRACKET, COIL MOUNTING, SLINGSHOT	1
2	SC00101-02	SCREW, MACHINE, 8-32 X 1/4 PPH SEMS ZC	2
3	PL00132-01	SLEEVE, COIL	1
4	CL00109	COIL, 800T #23	1
5	DI00100	DIODE, 1N4004 RECTIFIER 1.0A 400VR	1
6	MT00136-01	BRACKET, COIL RETAINING	1
7	RR00100-25	E-RING, EXT., .250D SHAFT	1
8	A-00328	ASSEMBLY, ARM, SLINGSHOT	1
9	A-00538	ASSEMBLY, BRACKET, PIVOT, SLINGSHOT ARM	1
10	SG00105	SPRING, COMP, .700 X 1.625 CONICAL	1
11	A-00329	ASSEMBLY, PLUNGER/LINK	1
		consists of the following parts:	
11A	SM00113-06	PLUNGER, CLEVIS 2.000L	1
11B	RP00100-06	PIN, ROLL 1/8 X 5/8	1
11C	PL00246	LINK, PLUNGER	1

Proprietary and confidential information, not to be disclosed or copied without the express permission of CAPCOM® COIN-OP, INC.

OUTHOLE KICKER ASSEMBLY

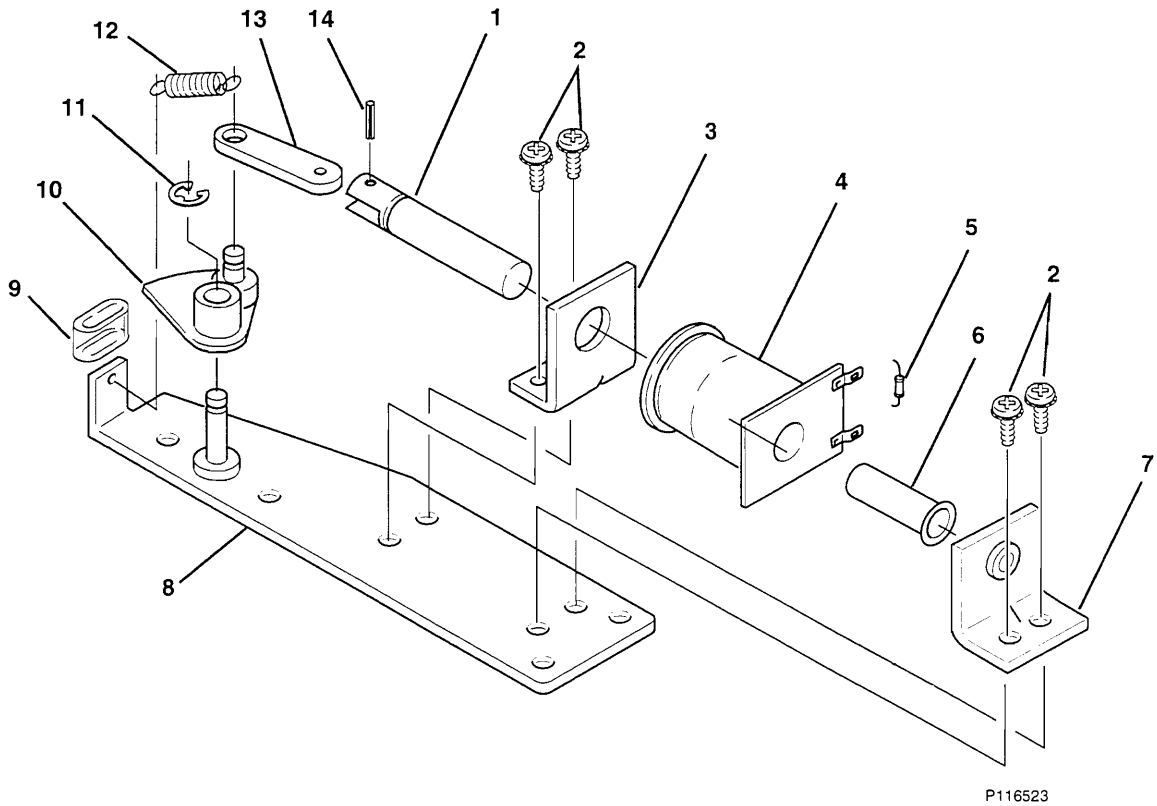

OUTHOLE KICKER ASSEMBLY			
No.	Part Number	Description	Req.
	A-00372	ASSEMBLY, BALL RETURN, OUTHOLE *consists of the following parts:*	
1	SM00216	PLUNGER	1
2	SC00100-02	SCREW, MACHINE, 6-32 X 1/4 PPHS EXT/SEMS	4
3	MT00494	BRACKET, COIL RETURN. .625 #6 X .375	1
4	CL00109	COIL, 800T #23	1
5	DI00100	DIODE, 1N4004 RECTIFIER 1.0A 400VR	1
6	PL00132-03	SLEEVE, COIL 1.686L	1
7	A-00523	ASSEMBLY, BRACKET, PLUNGER STOP #6 X .375	1
8	A-00522	ASSEMBLY, PLATE, MOUNTING	1
9	MS00164	BUMPER, CAM ARM	1
10	A-00524	ASSEMBLY, CAM ARM	1
11	RR00100-25	E-RING, .25D SHAFT	1
12	SG00125	SPRING	1
13	PL00285	LINK, PLUNGER	1
14	RP00100	PIN, ROLL 1/8 X 5/8L	1

Proprietary and confidential information, not to be disclosed or copied without the express permission of CAPCOM® COIN-OP, INC.

SINGLE BALL EJECTOR ASSEMBLY

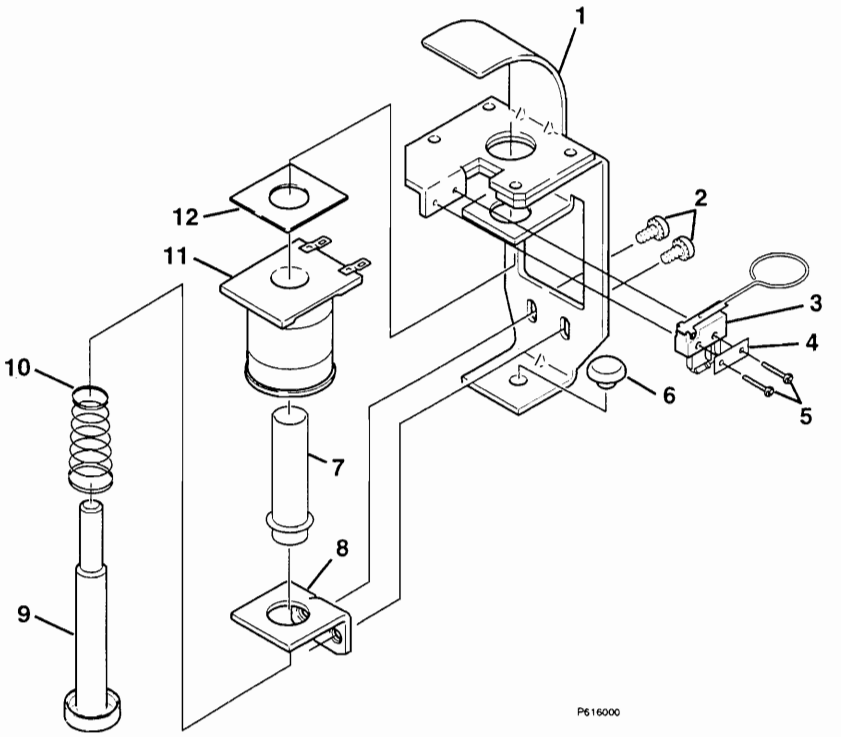

SINGLE BALL EJECTOR ASSEMBLY			
No.	Part Number	Description	Req.
	A-00547-D	ASSEMBLY, BALL EJECTOR *consists of the following parts:*	
1	A-00546	ASSEMBLY, SCOOP	1
2	SC00101-02	SCREW, MACHINE, 8-32 X .25L PHP SEMS	2
3	SW00139-D	SWITCH, MICRO, WITH ACTUATOR & DIODE	1
4	MT00491	PLATE, SWITCH, #4 X .375	1
5	SC00157-04	SCREW, MACHINE, 2-56 X .50L PHP SEMS ZC	2
6	RB00110	GROMMET, RUBBER 5/8D X 1/8H	1
7	PL00133-02	SLEEVE, COIL	1
8	MT00136	BRACKET, COIL RETAINING	1
9	A-00147	ASSEMBLY, PLUNGER AND TIP	1
10	SG00105	SPRING, COMP., .700 X 1.625 CONICAL	1
11	CL00109	COIL, 800T #23	1
12	FB00103	INSULATOR, COIL, 1.16 X 1.31 X .010	1

Proprietary and confidential information, not to be disclosed or copied without the express permission of CAPCOM® COIN-OP, INC.

TRIPLE BALL EJECTOR ASSEMBLY

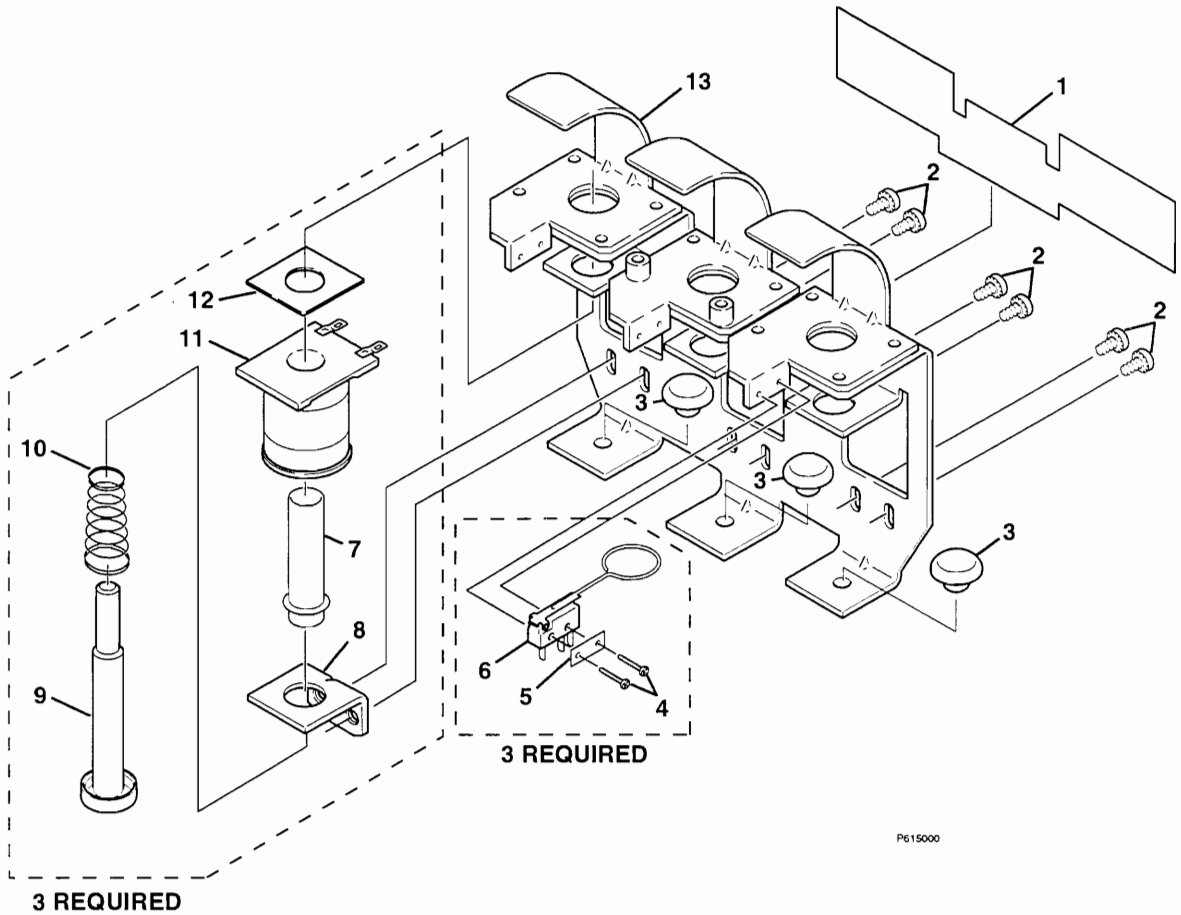

TRIPLE BALL EJECTOR ASSEMBLY			
No.	Part Number	Description	Req.
	A-00553-D	ASSEMBLY, BALL EJECTOR, TRIPLE *consists of the following parts:*	
1	FB00107	INSULATOR	1
2	SC00101-02	SCREW, MACHINE, 8-32 X 1/4 PPH SEMS ZC	6
3	RB00110	BUTTON, BUMPER, 5/8D 1/8H	3
4	SC00157-04	SCREW, MACHINE, 2-56 X 1/2 PPH SEMS ZC	6
5	MT00491	PLATE, SWITCH, #4 X .375	3
6	SW0139-D	SWITCH, MICRO, WITH ACTUATOR	3
7	PL00133-02	SLEEVE, COIL, 1.656L WITH .188 EXT	3
8	MT00136	BRACKET, COIL RETAINING, .625 8-32 X .375	3
9	A-00147	ASSEMBLY, SUB, PLUNGER & TIP	3
10	SG00105	SPRING, COMP., 0.70 X 1.62, .024, CONICAL	
11	CL00109	COIL, 800T #23	3
12	FB00103	INSULATOR, COIL, 1.16 X 1.31 X .010	3
13	A-00552	ASSEMBLY, SCOOP	1

Proprietary and confidential information, not to be disclosed or copied without the express permission of CAPCOM® COIN-OP, INC.

KICKBACK ASSEMBLY

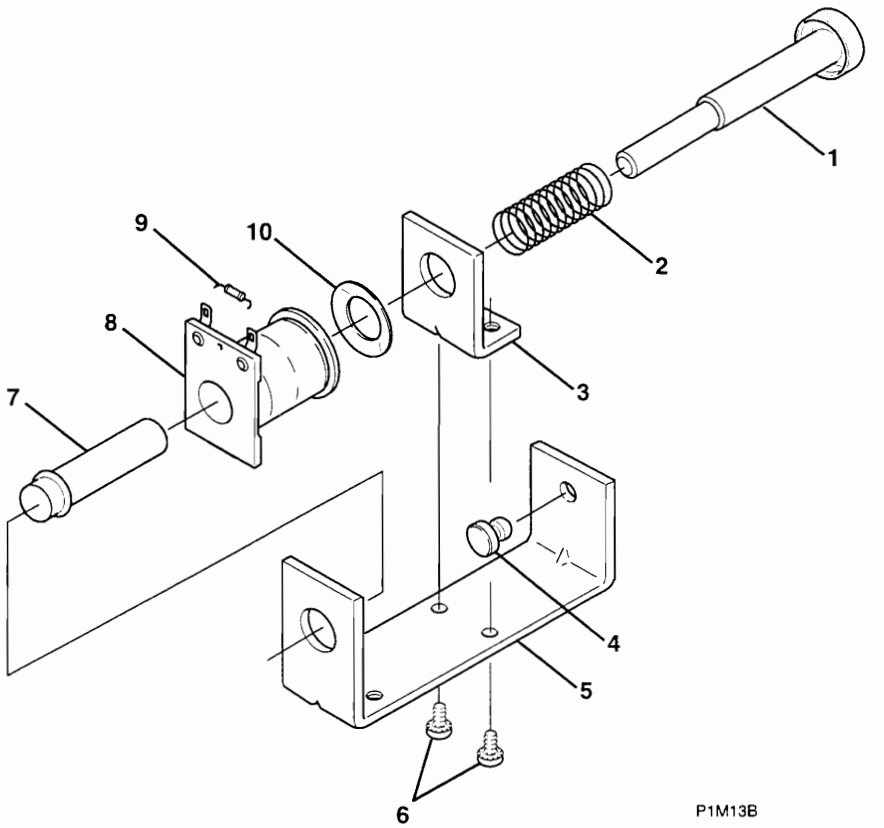

KICKBACK ASSEMBLY			
No.	Part Number	Description	Req.
	A-00148	ASSEMBLY, KICKBACK *consists of the following parts:*	
1	A-00147	ASSEMBLY, SUB, PLUNGER & TIP	1
2	SG00105	SPRING, COMP. 0.70 X 1.62, .024 CONICAL	1
3	MT00136	BRACKET, COIL RETAINING	1
4	RB00110	BUTTON, BUMPER, 5/8D X 1/8H	1
5	MT00203	BRACKET, COIL MOUNTING	1
6	SC00101-02	SCREW, MACHINE, 8-32 X 1/4 PPH SEMS ZC	2
7	PL00154-01	SLEEVE, COIL 1.81L WITH .25 EXT.	1
8	CL00109	COIL, 800T #23	1
9	DI00100	DIODE, 1N4004 RECTIFIER 1.0A 400VR	1
10	WS00107-02	WASHER, SPRING	1

Proprietary and confidential information, not to be disclosed or copied without the express permission of CAPCOM® COIN-OP, INC.

STAND UP TARGET ASSEMBLIES

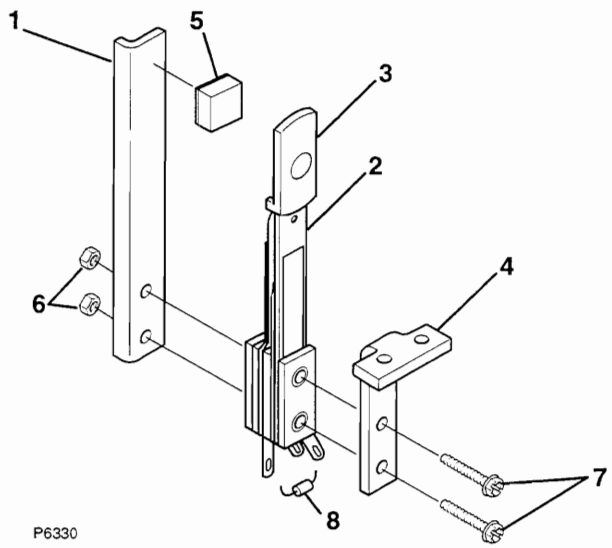

A-00330-

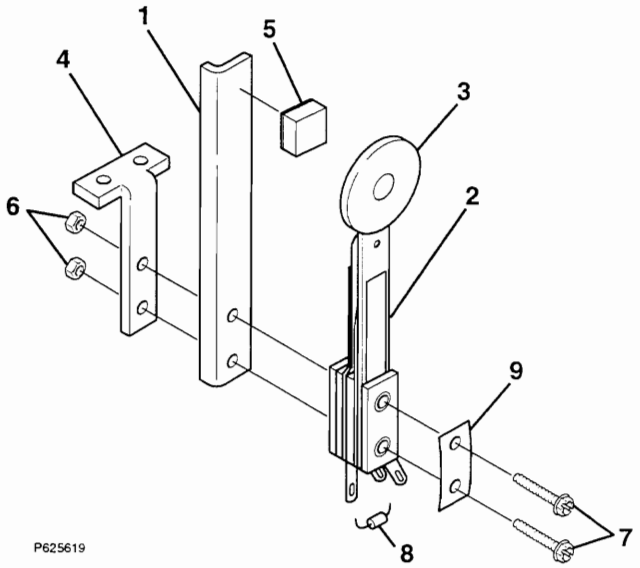

A-00579-

Ref.	Description	Component Part Number	Component Part Quantity	
			A-00330-Y-D	A-00579-Y-D
1	PLATE, BACK-UP, STAND-UP TARGET, LEFT	MT00275-L	1	1
2	SWITCH, LEAF, STAND-UP, TARGET	SW00140	1	
2	SWITCH, LEAF, STAND-UP TARGET, ROUND	SW00141		1
3	TARGET, STAND-UP TARGET, HALF, YELLOW	PL00247-Y	1	
3	TARGET, STAND-UP TARGET, 1.0"D, YELLOW	PL00217-Y		1
4	BRACKET, MOUNTING, STAND-UP, FRONT, SINGLE	MT00279	1	
4	BRACKET, MOUNTING, REAR, STAND-UP, SINGLE	MT00279-1		1
5	PAD, FOAM, ADH, 3/8" X 3/8" X 7/32"	MS00134	1	1
6	NUT, 6-32 KEPS HEX	NT00101-06	2	2
7	SCREW, MACHINE, 6-32 X 3/4" SLHWH, ZINC	SC00131-06	2	2
8	DIODE, 1N4004 RECTIFIED, 1.0A, 400VR	DI00100	1	1
9	PLATE, SWITCH, #6 X .375	MT00461		1

Proprietary and confidential information, not to be disclosed or copied without the express permission of CAPCOM® COIN-OP, INC.

LEFT POWER GATE ASSEMBLY

RIGHT POWER GATE ASSEMBLY

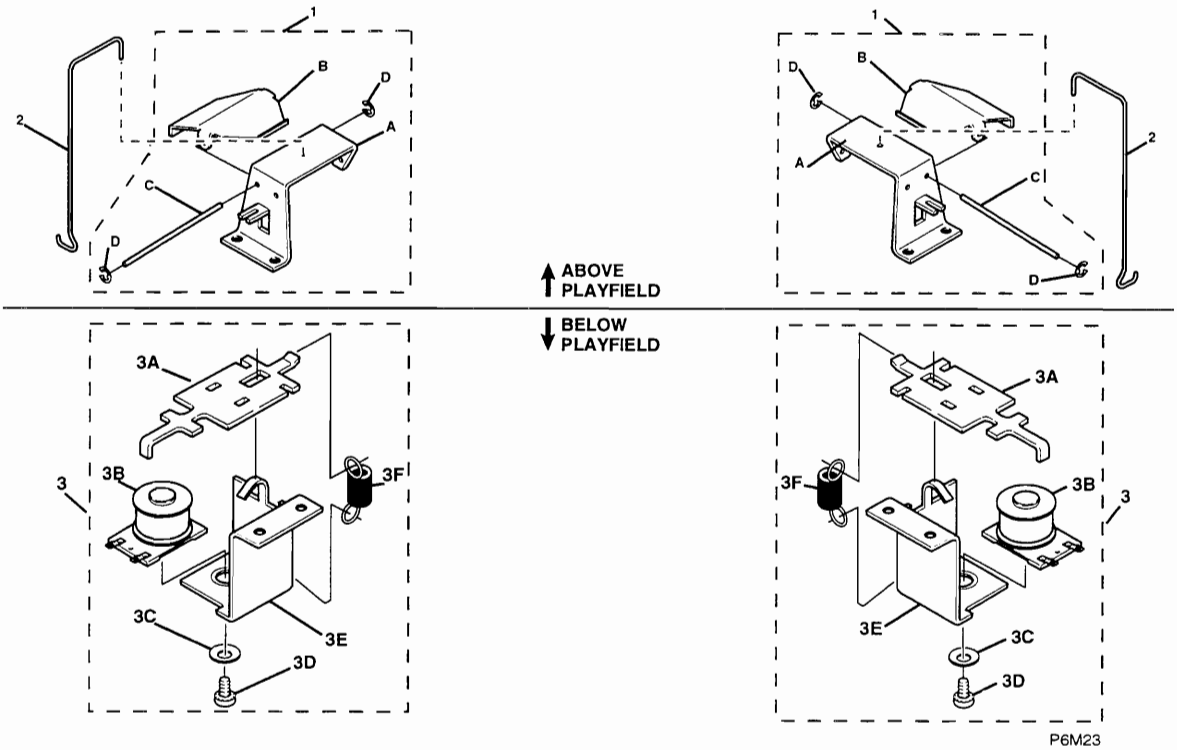

POWER GATE ASSEMBLIES				
Ref.	Part Number	Description	Quantity Required	
			Left Power Gate A-00526-1L	Right Power Gate A-00526-1R
1	A-00526-1L	ASSEMBLY, GATE, 1 WAY, LEFT	1	-----
1	A-00526-1R	ASSEMBLY, GATE, 1 WAY, RIGHT	-----	1
		left and right assemblies consist of the following parts:		
1A	MT00498-1	BRACKET	1	1
1B	MT00477-1	GATE	1	1
1C	SM00217-1	SHAFT	1	1
1D	RR00100-06	E-RING EXT., .062D SHAFT	2	2
2	WF00135	WIREFORM	1	1
3	A-00575-L	ASSEMBLY, COIL & BRACKET, LEFT	1	-----
3	A-00575-R	ASSEMBLY, COIL & BRACKET, RIGHT	-----	1
3A	A-00574	ACTUATOR	1	1
3B	CL00112	COIL, 600T #26 MINI	1	1
3C	WS00109-15	WASHER, FLAT #8 .438OD .064 T BRASS	1	1
3D	SC00101-03	SCREW, MACHINE, 8-32 X 3/8 PPH SEMS ZC	1	1
3E	A-00572-L	BRACKET, LEFT	1	-----
3E	A-00572-R	BRACKET, RIGHT	-----	1
3F	SG00126	SPRING, EXT, 0.200D X 21 ACTIVE COILS	1	1

Proprietary and confidential information, not to be disclosed or copied without the express permission of CAPCOM® COIN-OP, INC.

NOTES

Proprietary and confidential information. not to be disclosed or copied without the express permission of CAPCOM® COIN-OP, INC.

TROUBLESHOOTING GUIDE

POWER-UP PROBLEMS

SYMPTOM	POSSIBLE CAUSE	PROBABLE SOLUTION
Game Is Completely Dead -No Lights, No Sound, No Pushbuttons, No Display	Main Power Switch not set to ON position.	1. Set Main Power Switch to the ON position. (Switch located under cabinet near right front leg.)
	Broken Plug or Power Cord.	1. Inspect Cord and Plug for defects and repair or replace the entire cord set. 2. Check Plug for loose wires and tighten as required.
	No AC Power.	1. Connect Plug to AC power outlet. 2. Check building circuit breakers or fuses. 3. Check Power Transformer, Line Filter assemblies.
	Main Power Fuse defective.	1. Replace fuse with another of the exact same type. 2. Check Power Transformer, Line Filter assemblies. (Fuse located inside cabinet near right front leg.)
	Low Voltage AC Fuse defective.	1. Replace fuse with another of the exact same type. 2. Check Low Voltage DC Power rectifiers. (Fuse located inside backbox on top circuit board.)
	Low Voltage DC Fuse defective.	1. Replace fuse with another of the exact same type. 2. Check Low Voltage DC Voltage Regulator.
	Low Voltage DC Wiring Harness unplugged or damaged.	1. Check Low Voltage DC Wiring Harness Connectors. 2. Test Low Voltage DC Wiring Harness for continuity.
	Game set up for incorrect AC Line Voltage.	1. Check Power Transformer Line Voltage Wiring (Connector located near transformer in cabinet.)
Game Accepts Currency Or Tokens, But Does Not Start.	Acceptor Mechanism not seated fully on its own mounting bracket.	1. Open Coin Door and check each Acceptor by hand to ensure proper mounting. Ensure that each of the release latches is in the closed and locked position. 2. Check for switch activation when known good token or currency is inserted into Acceptor. Adjust switch or carefully bend lever to improve alignment if necessary.
	Faulty or intermittent Coin Door Wiring Harness connections.	1. Open coin door to enter System Menu, then select *Standard Tests* and go to the *Switches* routine. Check each device independently to locate trouble. 2. Look for pinched or cut wires where harness touches moving parts. Repair and reroute wires away from area.
Game Accepts Currency Or Tokens And Gives Players Instructions, But Does Not Produce A Ball To Begin Play.	High Voltage DC Power disabled.	1. Open coin door to enter System Menu, then select *Standard Tests* and go to *Voltage* to look for Check Interlock report. Pull out on switch actuator to reset. (Interlock Switch is located at left side of Coin Door.) 2. Switch damaged or broken. Replace Interlock Switch. (NOTE: The Switch routine will not test this switch!)
	High Voltage AC Fuse defective.	1. Replace fuse with another of the exact same type. 2. Check High Voltage DC Power rectifiers.
	High Voltage DC Fuse defective.	1. Replace fuse with another of the exact same type. 2. Check High Voltage DC Power filter capacitor.
	High Voltage DC Wiring Harness unplugged or damaged.	1. Check all High Voltage DC Power Wiring Connectors. 2. Check High Voltage DC Wiring Harness for continuity.

Proprietary and confidential information, not to be disclosed or copied without the express permission of CAPCOM® COIN-OP, INC.

COIN DOOR PROBLEMS

SYMPTOM	POSSIBLE CAUSE	PROBABLE SOLUTION
Game Will Not Start When Coins, Bills, Tokens, Etc. Are Inserted Into Acceptors.	Coin Door Wiring Harness unplugged or damaged.	1. Check Coin Door Wiring Harness Connectors. 2. Test Coin Door Wiring Harness for continuity.
	Acceptor Mechanism is jammed.	1. Open Coin Door, unlatch and remove Acceptor Mechanism, inspect and clear currency path as needed. 2. Object in cabinet blocking currency at Cash Box.
	Acceptor not level.	1. Repair or replace Coin Door if bent or damaged. 2. Adjust Game using internal Bubble Level.
	Cash Box filled to maximum capacity.	1. Check Cash Box for presence of counterfeit currency. 2. Remove currency from game more frequently.
	Acceptor Switch defective.	1. Open Coin Door to enter System Menu, then select Standard Tests and go to Switches to look for Dead reports. If manual switch activation does not change the Dead report then there is an electrical problem.
	Acceptor Assembly defective.	1. Clean and lubricate Acceptor Mechanism following specific manufacturer's detailed instructions. 2. Substitute known good Acceptor to verify that problem is not external to Acceptor.
Acceptor Mechanism Rejects Known Good Currency, Tokens, Etc.	Dirt or Debris in Acceptor Mechanism.	1. Open Coin Door, unlatch and remove Acceptor Mechanism, inspect and clear currency path as needed 2. Clean and lubricate Acceptor Mechanism following specific manufacturer's detailed instructions.
	Acceptor Mechanism out of adjustment.	1. Ensure that all removable parts are installed correctly and fully seated against the chassis of the Acceptor. 2. Clean and adjust Acceptor Mechanism following specific manufacturer's detailed instructions.
	Acceptor Mechanism defective.	1. Substitute known good unit to verify that problem is not external to Acceptor. 2. Repair or replace Acceptor assembly.
External Acceptor Indicators (Pricing, Flashing Arrows, Etc.) Not Illuminated.	No DC Power to indicator circuits.	1. Check Coin Door Wiring Connectors. 2. Test Coin Door Wiring Harness for continuity.
	Defective indicator lamp.	1. Go to System Menu and perform Lamp Test. 2. Substitute known good lamp to verify that problem is not external to Acceptor.
Acceptor Takes Known Good Currency But Game Will Not Start Or Continue.	Acceptor Switch out of adjustment.	1. Go to System Menu and perform Switch Test. 2. Clean and adjust Acceptor Switch following specific manufacturer's detailed instructions.
	Acceptor Switch defective.	1. Open Coin Door to enter System Menu, then select Standard Tests and go to Switches to look for Dead reports. If manual switch activation does not change the Dead report then there is an electrical problem. 2. Substitute known good switch to verify that problem is not external to Acceptor.

Proprietary and confidential information, not to be disclosed or copied without the express permission of CAPCOM® COIN-OP, INC.

DOT MATRIX DISPLAY PROBLEMS

SYMPTOM	POSSIBLE CAUSE	PROBABLE SOLUTION
Game Plays But Message Center (Dot Matrix Display) Is Completely Blank.	System Communication failure.	1. Check Communication Wiring Harness Connectors. 2. Test Communication Wiring Harness for continuity.
	Display Power Harness unplugged or damaged.	1 Check Display Power Wiring Harness Connectors. 2. Test Display Power Wiring Harness for continuity.
	Display Power AC Fuse defective.	1. Replace fuse with another of exact same type. 2. Check Display Power DC rectifiers, decoupling diode. (Fuse located inside backbox on top circuit board.)
	Display Board Assembly defective.	1. Check if any dot matrix display pixels are illuminated. 2. Inspect display glass for cracks, chips, darkened areas.
	Display Power Supply Board Assembly defective.	1. Test Display Power Supply diodes, transformer, caps. 2. Check Display Power Supply Switching Regulator IC.
Game Plays But Part Of Message Center Is Blank Or Illuminated All The Time.	System Communication failure.	1. Check Communication Wiring Harness Connectors. 2. Test Communication Wiring Harness for continuity.
	Display Board Assembly defective.	1. Inspect display glass for cracks, chips, darkened areas. 2. Check soldered connections between glass panel and printed circuit board, and resolder using minimum heat.
Random Patterns On Message Center (Some Images May Be Correct While Others Are Corrupted).	Incorrect Display Program.	1. Game or Image Memory IC installed in wrong order. 2. Music or Voice Memory IC installed on Processor Board Assembly (i.e., right chip, wrong socket). 3. Display or Game Memory IC defective. 4. Custom Control (FPGA) IC defective. 5. Microprocessor (MPU) IC defective.
	Display Board Assembly defective.	1. Open Coin Door to enter System Menu, then select Standard Tests and go to the Display routine. Check each pixel independently to locate trouble.
Checkerboard Pattern On Message Center (Display Never Changes).	No Display Program.	1. Game or Image Memory IC removed from socket. 2. Game or Image Memory IC defective.
Messages Appear Normal, Then Display Locks Up In The Same Place Every Time.	Corrupt Display Program.	1. Bent, broken, shorted pins on Memory IC. 2. Game or Image Memory IC defective.
Message Center Always In Game Menu And Troubleshooting Mode; Will Not Return To Game Play.	Coin Door open.	1. Close and lock Coin Door to go to normal game play.
	Mode Switch defective.	1. Switch Mounting Bracket bent, loose, or missing. 2. Mode Switch Wiring Harness may be faulty.
	Dirty or intermittent Mode circuit connection.	1. Check Mode Switch Wiring Harness Connectors. 2. Check Mode Switch Wiring Harness for continuity.
Game Will Not Retain Audit Information Or Custom Settings When Turned OFF. (An Error Message May Be Displayed).	Memory Back Up Battery or Memory IC defective.	1. Set Main Power Switch to the OFF position for one minute, then restore power to game. If RAM ERROR message appears, replace Processor Board Assembly. NOTE: The battery is integrated onto the Memory IC; it cannot be repaired or replaced separately.

Proprietary and confidential information, not to be disclosed or copied without the express permission of CAPCOM® COIN-OP, INC.

SOUND PROBLEMS

SYMPTOM	POSSIBLE CAUSE	PROBABLE SOLUTION
Game Plays But No Sound Is Heard At Any Time.	Volume set to zero loudness.	1. Open Coin Door to enter System Menu, then select SET VOLUME from the menu and use Flipper Buttons to adjust the sound to a comfortable loudness.
	Loudspeaker Wiring Harness unplugged or damaged.	1. Check Loudspeaker Wiring Connectors. 2. Test Loudspeaker Wiring Harnesses for continuity.
	Audio Power AC Fuse defective.	1. Replace fuse with another of exact same type. 2. Check Audio Power DC rectifiers. (Fuse located inside backbox on right side circuit board.)
	Faulty Loudspeaker.	1. Test each Loudspeaker for continuity. 2. Check each Loudspeaker for voice coil binding.
	System Communication failure.	1. Check Communication Wiring Harness Connectors. 2. Test Communication Wiring Harness for continuity.
	Sound Board Assembly defective.	1. Verify that the Light Emitting Diodes are functional. 2. Check Spike Protection Diodes, Audio Amplifier IC.
Game Plays But Sound Is Limited To Hum (Low Frequency Buzzing Noise) From All Loudspeakers.	Audio Power AC Fuse defective.	1. Replace fuse with another of exact same type. 2. Check Audio Power DC rectifiers, Filter Capacitors. (Fuse located inside backbox on right side circuit board.)
	Sound Board Assembly defective.	1. Check Audio Amplifier IC.
Weak Or Distorted Sound From One Or Two Loudspeakers.	Faulty Loudspeaker.	1. Check Loudspeakers for torn paper, liquid spills, etc. 2. Inspect speaker boxes for loose screws, dirt or debris
	Dirty or intermittent audio connections.	1. Carefully unplug and reseat each loudspeaker wire. 2. Check Loudspeaker Wiring Harnesses for continuity.
Little Or No High Frequency (Treble), Muffled Or Distant Sound Quality.	Loudspeakers disconnected.	1. Check small Loudspeakers in backbox for operation. 2. Test each small Loudspeaker for continuity. 3. Check Loudspeaker Wiring Harnesses for continuity.
Little Or No Low Frequency (Bass), Weak Or Hollow Sound Quality.	Loudspeakers disconnected or wired out of phase.	1. Check large Loudspeaker in cabinet for operation. 2. Connectors on small Loudspeakers installed in reverse. 3. Check Loudspeaker Wiring Harnesses for continuity.
Unintelligible Voice Messages, Strange Noises, Unrecognizable Music.	Incorrect Sound Program.	1. Music or Voice Memory ICs installed in wrong order. 2. Display or Game Memory ICs installed on audio board. 3. Defective Voice or Music Memory IC.
Continuous Medium Pitch Tone (Middle Frequency).	No Sound Program (1khz Self Test Tone is active).	1. Music or Voice Memory ICs removed from sockets. 2. Defective Music or Voice Memory IC.

Proprietary and confidential information, not to be disclosed or copied without the express permission of CAPCOM® COIN-OP, INC.

PLAYFIELD PROBLEMS - MECHANICAL

SYMPTOM	PROBABLE CAUSE	PROBABLE SOLUTION
Game Plays But One Or More Balls Continually Stick In One Area Of The Playfield.	Build up of dirt or debris.	1. Clean the playfield to remove any spills or sticky substances. Check for depressions on playfield surface. 2. Replace cracked cabinet glass or other sources of leaks.
	Loose screws cause parts to shift out of alignment.	1. Reposition parts and retighten screws firmly. 2. Apply removable threadlocking adhesive to fasteners.
	Damaged or broken guides, troughs, forms, etc.	1. Cracked or deformed items should be replaced. 2. Broken joints may be brazed or welded as a repair.
	Binding trip lever on position detection switch.	1. Move wiring harness out of lever path. 2. Loosen mounting screws and adjust switch position. 3. Carefully bend trip lever to improve alignment. 4. Repair or replace detection switch.
	Insufficient solenoid force to eject ball from assembly.	1. Clean and lubricate assembly linkages, bearings, etc. 2. Ensure that correct solenoid return spring is installed. 3. Open Coin Door to enter System Menu, then select Standard Tests and go to Sol. Volts to look for Low Voltage report. Check Power Transformer Line Voltage Wiring. (Connector located near transformer in cabinet.) 4. Check playfield angle using a protractor or level.
Game Plays OK But Balls Hit Hard And Bounce Too Much.	Excessive solenoid force.	1. Rubber bumper button damaged or missing from one or more solenoid assemblies. 2. Ensure that correct solenoid return spring is installed. 3. Open Coin Door to enter System Menu, then select Standard Tests and go to Sol. Volts to look for Hi Voltage report. Check Power Transformer Line Voltage Wiring. (Connector located near transformer in cabinet.) 4. Check playfield angle using a protractor or level.
Premature Breakage Of Posts, Targets, Buttons, Or Other Plastic Parts.	Aftermarket replacement parts installed during previous game repair.	1. Use only new *factory* parts and assemblies for repairs. Other parts may fit and function but they will not last. 2. Fasteners tightened excessively, cracking parts during installation. Do not use too much force when tightening.
One Or More Balls Are Missing When The Game Is Started Or In Play	Mechanical part failure or poor alignment (ball dropped in cabinet, stuck somewhere on the playfield, etc.)	1. Game will automatically initiate its own "ball search" by cycling through each solenoid and motor assembly a few times to dislodge a ball stuck on the playfield. 2. After an unsuccessful attempt at freeing a missing ball, the game will resume operation with fewer balls. A game will continue with only one ball.
	Ball removed from game or placed in cabinet during service.	1. Locate missing ball in cabinet and return to playfield. Game will accept ball and return to normal operation. 2. Check your pockets!
Ball Trough Is Inoperative (Jams, Not Able To Eject A Ball For The Shooter, Etc.)	Binding trip lever on position detection switch.	1. Check harness for wires caught in lever path. Relocate wires so they can not get into switch lever path again. 2. Loosen mounting screws and adjust switch position. Carefully bend lever to improve alignment if necessary. 3. Repair or replace detection switch.
	Loose part caught in Ball Trough Assembly.	1. Remove Bottom Arch from playfield to expose the interior of the Ball Trough Assembly. Extract loose part and realign as necessary to restore proper operation. 2. Reinstall Bottom Arch and loose part onto playfield.

Proprietary and confidential information, not to be disclosed or copied without the express permission of CAPCOM® COIN-OP, INC.

PLAYFIELD PROBLEMS - MECHANICAL (CONT.)

SYMPTOM	PROBABLE CAUSE	POSSIBLE SOLUTION
Tilt Or Slam Switches Are Stuck, Causing Constant Game Tilt	An item in the cabinet is pressing against the switch, causing a false Tilt or Slam indication.	1. Open Coin Door to enter System Menu, then select Standard Tests and go to the Switches routine. Check each device independently to locate trouble. 2. Look for objects that can touch either switch when the Coin Door would be in its closed and locked position.
	Loose part caught in mechanism.	1. Check Tilt Switch Assembly for loose thumbscrew on weight or hookwire separated from hanger bracket. 2. Make sure that playfield bottom assemblies do not contact either switch. Realign and tighten fasteners.

PLAYFIELD PROBLEMS - SOLENOIDS

SYMPTOM	PROBABLE CAUSE	POSSIBLE SOLUTION
Solenoids Firing Randomly, Sometimes Two At One Time.	Faulty or intermittent solenoid connections.	1. Open coin door to enter System Menu, then select Standard Tests and go to the Solenoids routine. Check each device independently to locate trouble. 2. Look for pinched or cut wires where harness touches moving parts. Repair and reroute wires away from area. 3. Damaged or missing diodes on solenoid coils. 4. Test Communication Wiring Harness for continuity.
	Driver Board Assembly defective.	1. Damaged or missing diodes on Driver Board Assembly. Repair or replace Driver Board Assembly.
Flippers Respond Too Slowly Or Do Not Reset Quickly.	Flipper Assembly binding or defective.	1. Clean and lubricate assembly linkages, bearings, etc. 2. Ensure that correct solenoid return spring is installed. 3. Open coin door to enter System Menu, then select Standard Tests and go to the Solenoids routine. Check each device independently to locate trouble.
None Of The Solenoids Work.	High Voltage DC Power disabled.	1. Open coin door to enter System Menu, then select Standard Tests and go to Voltage to look for Check Interlock report. Pull out on switch actuator to reset. (Interlock Switch is located at left side of Coin Door.) 2. Switch damaged or broken. Replace Interlock Switch. (NOTE: The Switch routine will not test this switch!)
	High Voltage AC Fuse defective.	1. Replace fuse with another of the exact same type. 2. Check High Voltage DC Power rectifiers.
	High Voltage DC Fuse defective.	1. Replace fuse with another of the exact same type. 2. Check High Voltage DC Power filter capacitor.
	High Voltage DC Wiring Harness unplugged or damaged.	1. Check all High Voltage DC Power Wiring Connectors. 2. Check High Voltage DC Wiring Harness for continuity.
None Of The Solenoids Work.	System Communication failure.	1. Check Communication Wiring Harness Connectors. 2. Test Communication Wiring Harness for continuity.
	Driver Board Assembly defective.	1. Check Low Voltage DC Power filter capacitor and coil.
Game Plays But A Small Group Of Solenoids Do Not Operate.	Solenoid Assembly Wiring Harness unplugged or damaged.	1. Check Solenoid Assembly Wiring Harness Connectors. 2. Test Solenoid Assembly Wiring Harnesses for continuity.
	System Communication failure.	1. Check Communication Wiring Harness Connectors. 2. Test Communication Wiring Harness for continuity.

Proprietary and confidential information, not to be disclosed or copied without the express permission of CAPCOM® COIN-OP, INC.

PLAYFIELD PROBLEMS - SOLENOIDS (CONT.)

One Or More Solenoids, Lamps, Or Motors Is Always On When Main Power Is ON.	Cross connection between two DC Voltage sources.	1. Look for pinched or cut wires where harness touches moving parts. Repair and reroute wires away from area.
	Driver Board Assembly defective.	1. Check Smart Solid State Relays (Power IC devices).
Solenoids Repeatedly Burn Out.	System Communication failure.	1. Check Communication Wiring Harness Connectors. 2. Test Communication Wiring Harness for continuity.

PLAYFIELD PROBLEMS - SWITCHES

SYMPTOM	PROBABLE CAUSE	POSSIBLE SOLUTION
Premature Failure Of A Few Switches, Causing Irregular Scoring Or Inability To Complete All Steps In Game.	Excessive solenoid force.	1. Use only new factory parts and assemblies for repairs. Other parts may fit and function but they will not last. 2. Fasteners tightened excessively, cracking parts during installation. Do not use too much force when tightening. 3. Open Coin Door to enter System Menu, then select Standard Tests and go to Sol. Volts to look for Hi Voltage report. Check Power Transformer Line Voltage Wiring. (Connector located near transformer in cabinet.) 4. Check playfield angle using built-in bubble level.
Switches Firing Randomly, Sometimes Two At One Time.	Faulty or intermittent switch connections.	1. Open coin door to enter System Menu, then select Standard Tests and go to the Switches routine. Check each device independently to locate trouble. 2. Look for pinched or cut wires where harness touches moving parts. Repair and reroute wires away from area. 3. Test Communication Wiring Harness for continuity.
Too Many Or Not Enough Tilt Or Slam Detections.	Incorrect switch adjustment.	1. Slam Switch caught on clothing or cash box and bent. Refer to Slam Switch Sensitivity Adjustment instructions. 2. Tilt Switch caught on wiring or aligned incorrectly. Refer to Tilt Switch Sensitivity Adjustment instructions.
A Standard Switch Has Not Been Activated In Several Games.	Players are concentrating on other shots or not skilled enough to activate switch.	1. Open Coin Door to enter System Menu, then select Standard Tests and go to Switches to look for Dead reports. If manual switch activation changes the report to OK then players are the cause of this condition.
	Switch defective.	1. Open Coin Door to enter System Menu, then select Standard Tests and go to Switches to look for Dead reports. If manual switch activation does not change the Dead report then there is an electrical problem.
An Optical Switch Has Not Been Activated In Several Games.	External light leakage is enough to prevent normal activation of switch.	1. Open Coin Door to enter System Menu, then select Standard Tests and go to Switches to look for Dead reports. If manual switch path blockage changes the report to OK then leakage is the cause of this condition. 2. Check for missing light shields or misalignment.
	Switch defective.	1. Open Coin Door to enter System Menu, then select Standard Tests and go to Switches to look for Dead reports. If manual switch activation does not change the Dead report then there is an electrical problem. 2. Ensure that Optodetector Board Assembly is oriented properly

Proprietary and confidential information, not to be disclosed or copied without the express permission of CAPCOM® COIN-OP, INC.

PLAYFIELD PROBLEMS - SWITCHES (CONT.)

SYMPTOM	PROBABLE CAUSE	POSSIBLE SOLUTION
	Faulty or intermittent switch connections.	1. Open Coin Door to enter System Menu, then select Standard Tests and go to the Switches routine. Check each device independently to locate trouble. 2. Look for pinched or cut wires where harness touches moving parts. Repair or reroute wires away from area.
None Of The Switches Work.	Low Voltage DC Wiring Harness unplugged or damaged.	1. Check Low Voltage DC Power Wiring Connectors. 2. Test Low Voltage DC Wiring Harness for continuity.
	System Communication failure.	1. Check Communication Wiring Harness Connectors. 2. Test Communication Wiring Harness for continuity.
	Switch Board Assembly defective.	1. Check Low Voltage DC Power filter capacitor and coil. 2. Repair or replace Switch Board Assembly.
System Menu Is Not Displayed When Opening Coin Door.	Cabinet Switch Wiring Harness unplugged or damaged.	1. Check Cabinet Switch Wiring Harness Connectors. 2. Test Cabinet Switch Wiring Harness for continuity.
	Switch defective.	1. Temporarily jumper switch to get into System Menu. 2. Test System Menu Switch for continuity.
	Processor Board Assembly defective.	1. Check signal diodes for rectification and leakage.

PLAYFIELD PROBLEMS - ILLUMINATION

SYMPTOM	PROBABLE CAUSE	POSSIBLE SOLUTION
Premature Burn Out Of Many Lamps (Bulbs May Or May Not Appear Excessively Bright).	Higher than normal line voltage or excessive temperature stresses bulbs.	1. Open coin door to enter System Menu, then select Standard Tests and go to Sol. Volts to look for Hi Line report. Check Power Transformer Line Voltage Wiring. (Connector located near transformer in cabinet.) 2. Move game away from sources of heat such as heat registers and high intensity lighting. Ensure that air flows freely around cabinet and backbox ventilation holes.
	Incorrect bulbs used as a replacement during a previous game repair.	1. Use only new factory parts and assemblies for repairs. Other parts may fit and function but they will not last.
Lamps Firing Randomly, Sometimes Two At One Time.	Faulty or intermittent lamp connections.	1. Open coin door to enter System Menu, then select Standard Tests and go to the Lamps routine. Check each device independently to locate trouble. NOTE: Some lamps are wired in pairs; refer to Lamp Matrix charts. 2. Look for pinched or cut wires where harness touches moving parts. Repair and reroute wires away from area. 3. Damaged or missing diodes on lamp sockets. 4. Test Communication Wiring Harness for continuity.
	Driver Board Assembly defective.	1. Damaged or missing diodes on Driver Board Assembly. Repair or replace Driver Board Assembly.
	Medium Voltage DC Wiring Harness unplugged or damaged.	1. Check Medium Voltage DC Wiring Harness Connectors. 2. Test Medium Voltage DC Wiring Harness for continuity.
Game Plays But About Half Of The Lamps Are Not Illuminated.	Medium Voltage AC Fuse defective.	1. Replace fuse with another of the exact same type. 2. Check Medium Voltage DC Power rectifiers.

Proprietary and confidential information, not to be disclosed or copied without the express permission of CAPCOM® COIN-OP, INC.

PLAYFIELD PROBLEMS - ILLUMINATION (CONT.)

SYMPTOM	PROBABLE CAUSE	POSSIBLE SOLUTION
	Medium Voltage DC Fuse defective.	1. Replace fuse with another of the exact same type. 2. Check Medium Voltage DC Power filter capacitor.
Game Plays But A Small Group Of Lamps Are Not Illuminated.	Lamp Matrix Row or Column Wiring Harness unplugged or damaged.	1. Check Lamp Matrix Wiring Harness Connectors. 2. Test Lamp Matrix Wiring Harnesses for continuity.
	System Communication failure.	1. Check Communication Wiring Harness Connectors. 2. Test Communication Wiring Harness for continuity.
Game Plays But A Small Group Of Lamps Are Constantly Illuminated.	One Lamp Matrix Row or Column stuck ON (continuously powered).	1. Look for pinched or cut wires where harness touches moving parts. Repair and reroute wires away from area.
	Driver Board Assembly defective.	1. Check Smart Solid State Relays (Power IC devices). 2. Check Field Effect Transistors (Power Transistors).
One Or More Lamps Very Dim But Still Illuminated.	Incorrect bulbs used as a replacement during a previous game repair.	1. Use only new factory parts and assemblies for repairs. Other parts may fit and function but they will not last.
	Blackened glass, weak or old bulb filament, etc.	1. Replace bulb with another of the exact same type. 2. Test lamp diode for rectification and leakage.
Several Lamps Illuminate When Only One Or Two Should Be On ("Phantom" Effect).	Lamp Matrix defective.	1. Open coin door to enter System Menu, then select Standard Tests and go to Lamps routine. Check each device independently to locate trouble. 2. Test lamp diode for rectification and leakage.
	Lamp Wiring Harness damaged.	1. Look for pinched or cut wires where harness touches moving parts. Repair and reroute wires away from area.
One Or More Large Lamps ("Flashers") Are Constantly Illuminated.	Lamp Wiring Harness damaged.	1. Look for pinched or cut wires where harness touches moving parts. Repair and reroute wires away from area.
	Driver Board Assembly defective.	1. Check Field Effect Transistors (Power Transistors). 2. Test lamp diode for rectification and leakage.

Proprietary and confidential information, not to be disclosed or copied without the express permission of CAPCOM® COIN-OP, INC.

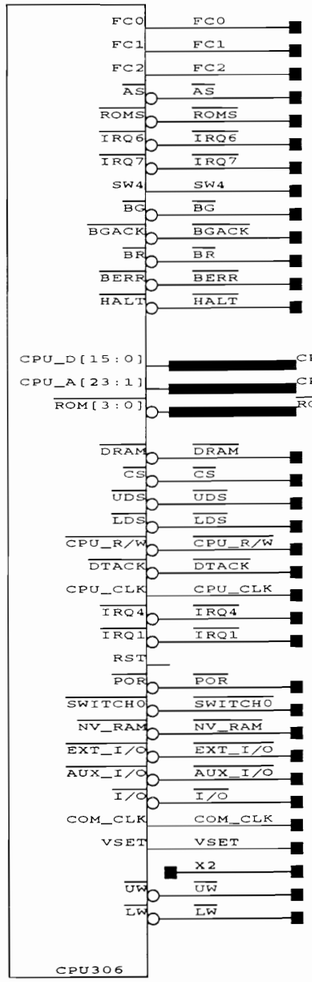

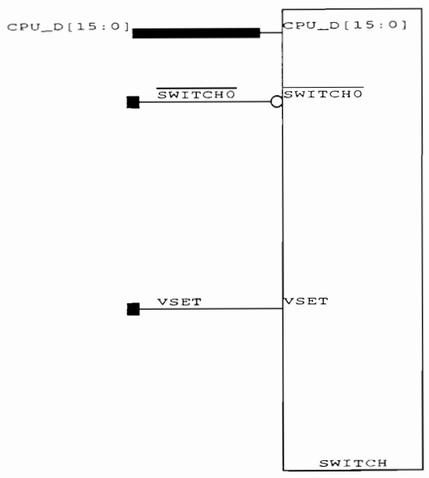

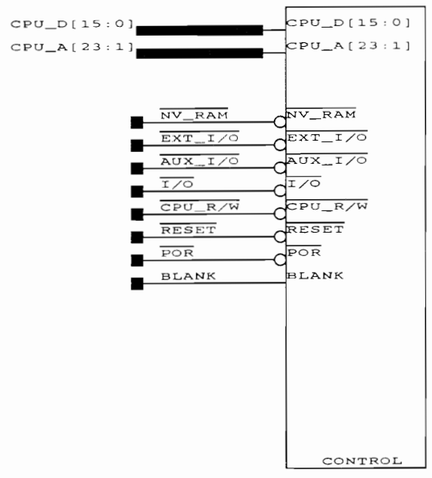

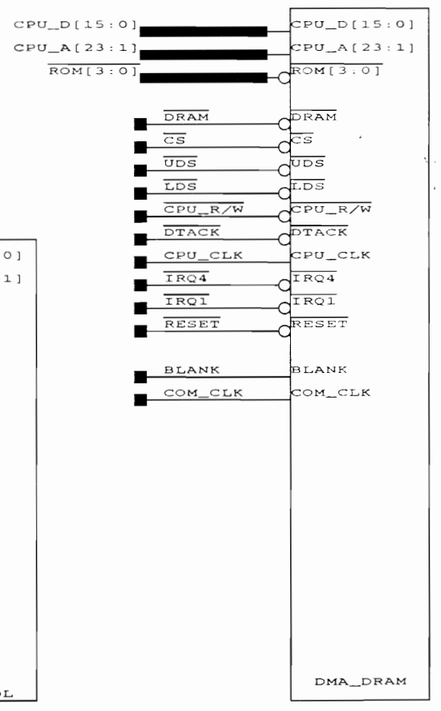

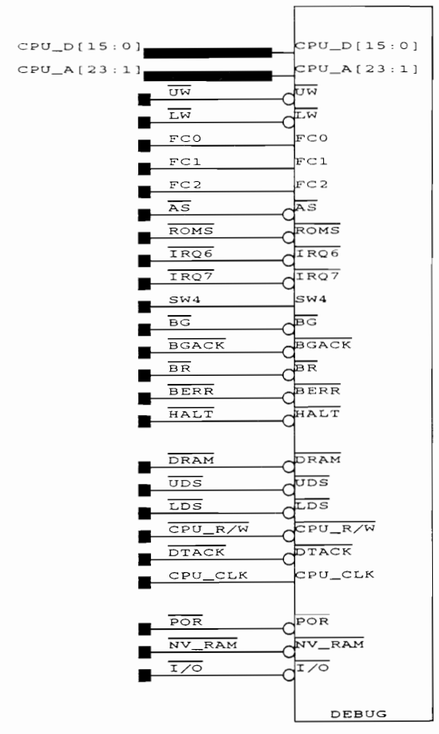

MAR 1 5 1996

PCB

B0015404

CAPCOM COIN-OP, INC.	
TITLE SYS_CPU	
PROJECT ENGINEER MARK COLDEBELLA	ASSEMBLY # A0015405
DATE FEBRUARY 29,1996	SHEET # 1 OF 6 / REV --

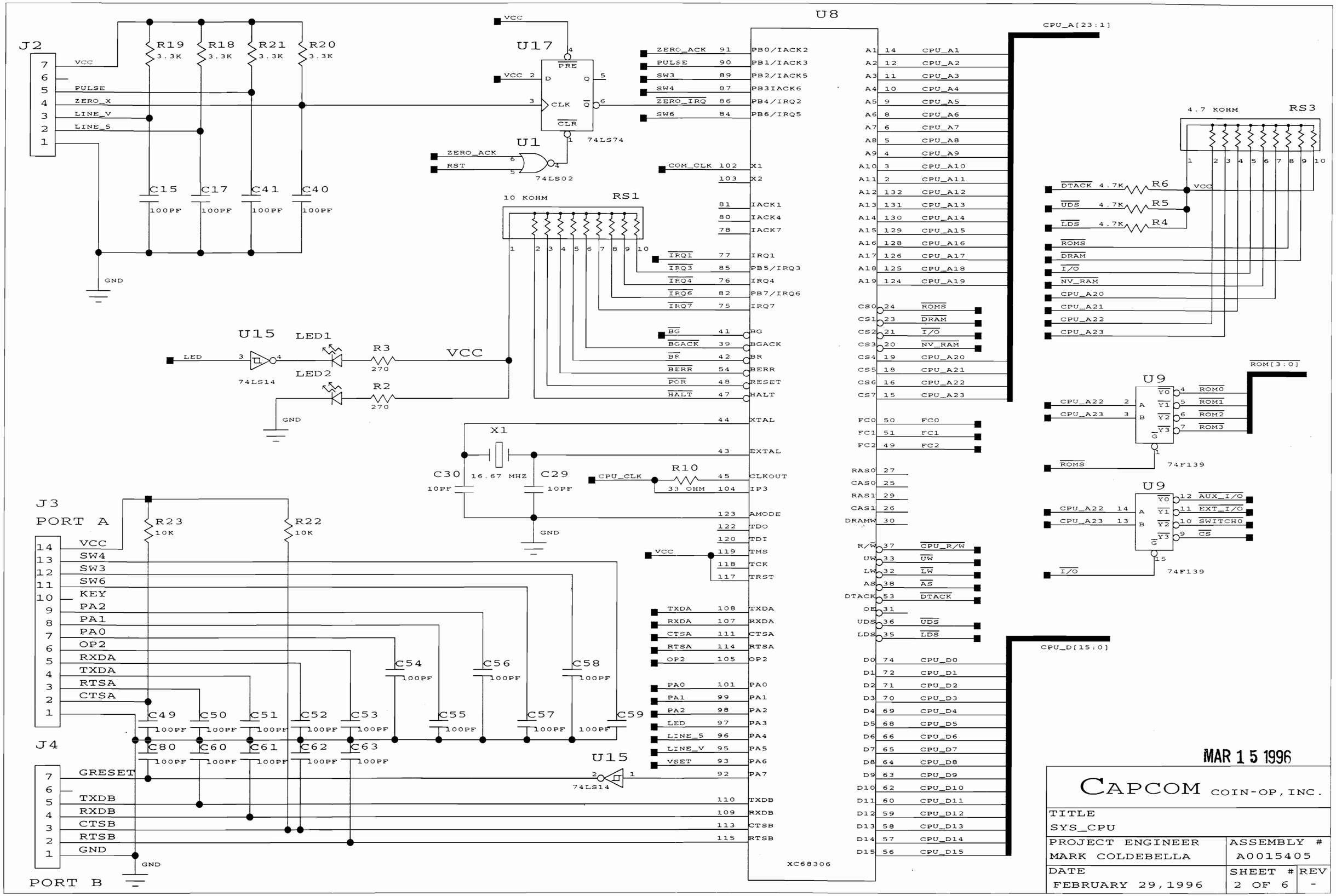

J2
VCC
PULSE
ZERO_X
LINE_V
LINE_5
R19 3.3K
R18 3.3K
R21 3.3K
R20 3.3K
C15 100PF
C17 100PF
C41 100PF
C40 100PF
GND
U17
74LS74
U1
74LS02
ZERO_ACK
RST
U8
XC68306
CPU_A[23:1]
CPU_D[15:0]
RS1
10 KOHM
RS3
4.7 KOHM
R6
R5
R4
DTACK 4.7K
UDS 4.7K
LDS 4.7K
ROMS
DRAM
I/O
NV_RAM
CPU_A20
CPU_A21
CPU_A22
CPU_A23
U15
74LS14
LED1
LED2
LED
R3 270
R2 270
VCC
X1
16.67 MHZ
C30 10PF
C29 10PF
R10 33 OHM
CPU_CLK
U9
74F139
ROM[3:0]
ROM0
ROM1
ROM2
ROM3
AUX_I/O
EXT_I/O
SWITCH0
CS
J3
PORT A
R23 10K
R22 10K
SW4
SW3
SW6
KEY
PA2
PA1
PA0
OP2
RXDA
TXDA
RTSA
CTSA
C54 100PF
C56 100PF
C58 100PF
C49 100PF
C50 100PF
C51 100PF
C52 100PF
C53 100PF
C55 100PF
C57 100PF
C59 100PF
C80 100PF
C60 100PF
C61 100PF
C62 100PF
C63 100PF
J4
GRESET
TXDB
RXDB
CTSB
RTSB
GND
PORT B
MAR 15 1996
CAPCOM COIN-OP, INC.
TITLE
SYS_CPU
PROJECT ENGINEER
MARK COLDEBELLA
ASSEMBLY #
A0015405
DATE
FEBRUARY 29, 1996
SHEET #
2 OF 6
REV
-

CPU_D[15:0]

RS6 10K OHM

RS7 2.2 KOHM

VCC

74LS245 U2

CPU_D15 2 A1 B1 18
CPU_D14 3 A2 B2 17
CPU_D13 4 A3 B3 16
CPU_D12 5 A4 B4 15
CPU_D11 6 A5 B5 14
CPU_D10 7 A6 B6 13
CPU_D9 8 A7 B7 12
CPU_D8 9 A8 B8 11
G 19 DIR 1

GND

LM339 U13 (2, 5)
LM339 U13 (1, 7)
LM339 U13 (14, 9)
LM339 U13 (13, 11)
LM339 U12 (2, 5)
LM339 U12 (1, 7)
LM339 U12 (14, 9)
LM339 U12 (13, 11) — LEVEL

RS4 2.2 KOHM

RS5 10K OHM

VCC

74LS245 U3

CPU_D7 2 A1 B1 18
CPU_D6 3 A2 B2 17
CPU_D5 4 A3 B3 16
CPU_D4 5 A4 B4 15
CPU_D3 6 A5 B5 14
CPU_D2 7 A6 B6 13
CPU_D1 8 A7 B7 12
CPU_D0 9 A8 B8 11
G 19 DIR 1

SWITCH0

GND

LM339 U11 (13, 11)
LM339 U11 (14, 9)
LM339 U11 (1, 7)
LM339 U11 (2, 5)
LM339 U10 (13, 11)
LM339 U10 (14, 9)
LM339 U10 (1, 7)
LM339 U10 (2, 5) — LEVEL

R8 1.2K LEVEL

Q1 2N3904

R9 1.2K VSET

R7 2.7K

GND

C64 C65 C66 C67 C68 C69 C70 C71 100PF
C72 C73 C74 C75 C76 C77 C78 C79 100PF

1N4148 D16
1N4148 D15
1N4148 D14
1N4148 D13
1N4148 D12
1N4148 D11
1N4148 D10
1N4148 D9
1N4148 D8
1N4148 D7
1N4148 D6
1N4148 D5
1N4148 D4
1N4148 D3
1N4148 D2
1N4148 D1

J6
6 SW13
5 SW14
4 KEY
3 SW15
2 SW16
1

J7
10 SW16
9 SW15
8 SW14
7 KEY
6 SW13
5 SW12
4 SW11
3 SW10
2 SW9
1

J9
10 SW8
9 KEY
8 SW7
7 SW6
6 SW5
5 SW4
4 SW3
3 SW2
2 SW1
1

GND

MAR 1 5 1996

CAPCOM COIN-OP, INC.

TITLE SYS_CPU		
PROJECT ENGINEER MARK COLDEBELLA	ASSEMBLY # A0015405	
DATE FEBRUARY 29, 1996	SHEET # 3 OF 6	REV -

CPU_D[15:0]

U14

CPU_A[23:1]

CPU_D7 19 D7 — A14 1 CPU_A15
CPU_D6 18 D6 — A13 26 CPU_A14
CPU_D5 17 D5 — A12 2 CPU_A13
CPU_D4 16 D4 — A11 23 CPU_A12
CPU_D3 15 D3 — A10 21 CPU_A11
CPU_D2 13 D2 — A9 24 CPU_A10
CPU_D1 12 D1 — A8 25 CPU_A9
CPU_D0 11 D0 — A7 3 CPU_A8
A6 4 CPU_A7
A5 5 CPU_A6
A4 6 CPU_A5
A3 7 CPU_A4
CPU_R/W 27 WE — A2 8 CPU_A3
NV_RAM 20 CE — A1 9 CPU_A2
22 OE — A0 10 CPU_A1
GND
BAT_RAM

10K OHM RS9 RS10 10K OHM

1 2 3 4 5 6 7 8 9 10 — 10 9 8 7 6 5 4 3 2 1

VCC

10K OHM RS11 10K OHM RS12

1 2 3 4 5 6 7 8 9 10 — 1 2 3 4 5 6 7 8 9 10

VCC

U5

CPU_D15 18 B1 — A1 2
CPU_D14 17 B2 — A2 3
CPU_D13 16 B3 — A3 4
CPU_D12 15 B4 — A4 5
CPU_D11 14 B5 — A5 6
CPU_D10 13 B6 — A6 7
CPU_D9 12 B7 — A7 8
CPU_D8 11 B8 — A8 9
DIR
G
74LS245 1 19

U4

CPU_D7 18 B1 — A1 2
CPU_D6 17 B2 — A2 3
CPU_D5 16 B3 — A3 4
CPU_D4 15 B4 — A4 5
CPU_D3 14 B5 — A5 6
CPU_D2 13 B6 — A6 7
CPU_D1 12 B7 — A7 8
CPU_D0 11 B8 — A8 9
DIR
G
74LS245 1 19

CPU_R/W

J10

BD15	1	2	
BD14	3	4	
BD13	5	6	
BD12	7	8	
BD11	9	10	
BD10	11	12	
BD9	13	14	
BD8	15	16	
BD7	17	18	
BD6	19	20	
BD5	21	22	
BD4	23	24	
BD3	25	26	
BD2	27	28	
BD1	29	30	
BD0	31	32	
BA1	33	34	
BA18	35	36	
BA19	37	38	
BA20	39	40	
B_R/W	41	42	
BLANKING	43	44	
AUX_I/O	45	46	
EXT_I/O	47	48	
BRESET	49	50	

25X2

GND

U1

I/O 2
CPU_A23 3 — 1
74LS02

U15

13 — 12
74LS14

U15

VCC 11 — 10
74LS14

U24

VCC 1 VCC — GND 8
2 VCC — RST 7
3 GND — NC 6
4 GND — NC 5
MAX699

MAX699

GND

U15 U15

POR 5 — 6 RST 9 — 8 RESET
74LS14 74LS14

U6

CPU_A1 18 B1 — A1 2
CPU_A18 17 B2 — A2 3
CPU_A19 16 B3 — A3 4
CPU_A20 15 B4 — A4 5
CPU_R/W 14 B5 — A5 6
BLANK 13 B6 — A6 7
12 B7 — A7 8
11 B8 — A8 9
DIR
G
74LS245 1 19

GND

CAPCOM COIN-OP, INC.

TITLE SYS_CPU		
PROJECT ENGINEER MARK COLDEBELLA	ASSEMBLY # A0015405	
DATE FEBRUARY 29, 1996	SHEET # 4 OF 6	REV -

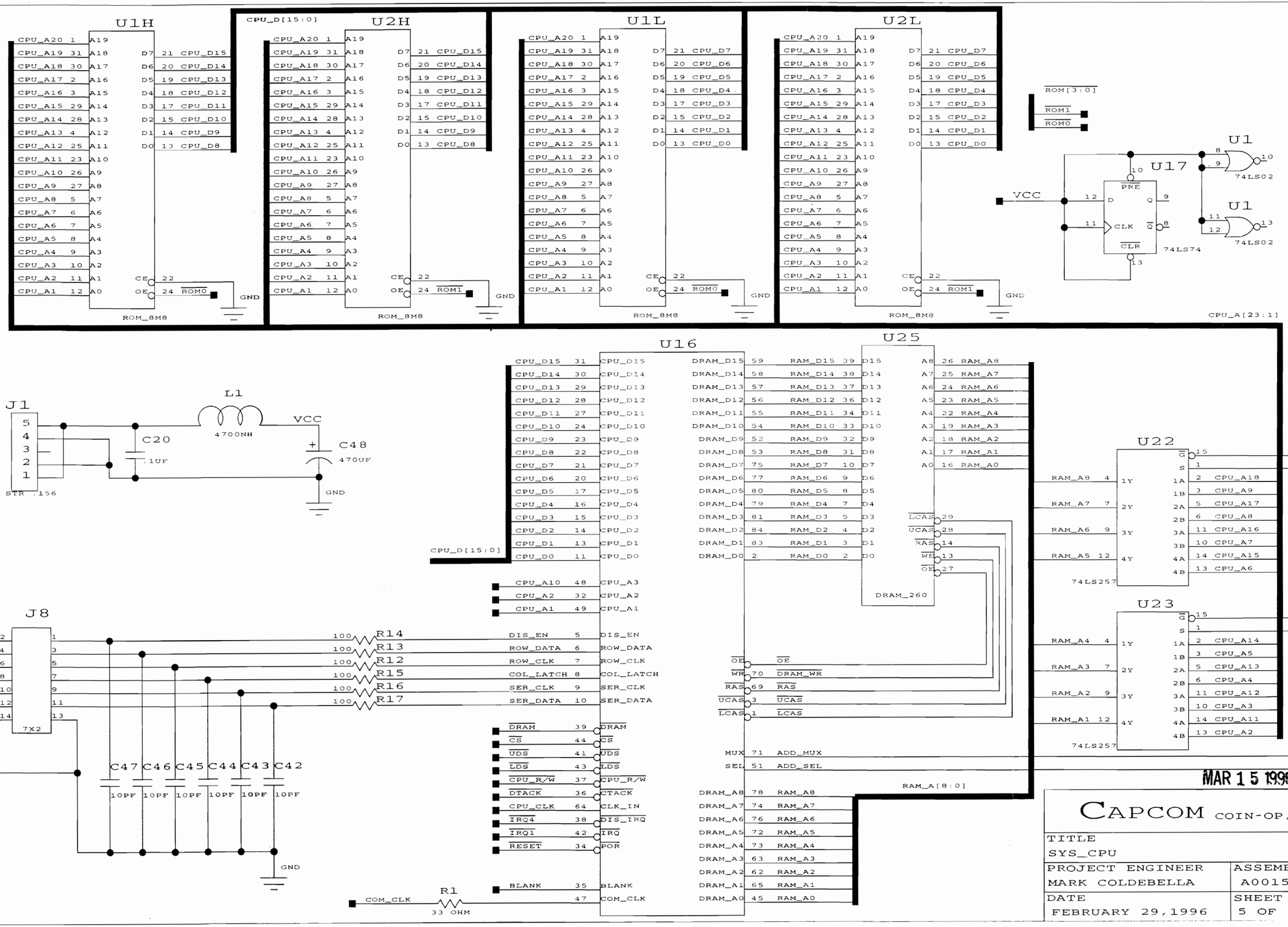
U1H
U2H
U1L
U2L
CPU_D[15:0]
CPU_A20 1
CPU_A19 31
CPU_A18 30
CPU_A17 2
CPU_A16 3
CPU_A15 29
CPU_A14 28
CPU_A13 4
CPU_A12 25
CPU_A11 23
CPU_A10 26
CPU_A9 27
CPU_A8 5
CPU_A7 6
CPU_A6 7
CPU_A5 8
CPU_A4 9
CPU_A3 10
CPU_A2 11
CPU_A1 12
A19
A18
A17
A16
A15
A14
A13
A12
A11
A10
A9
A8
A7
A6
A5
A4
A3
A2
A1
A0
D7 21 CPU_D15
D6 20 CPU_D14
D5 19 CPU_D13
D4 18 CPU_D12
D3 17 CPU_D11
D2 15 CPU_D10
D1 14 CPU_D9
D0 13 CPU_D8
D7 21 CPU_D7
D6 20 CPU_D6
D5 19 CPU_D5
D4 18 CPU_D4
D3 17 CPU_D3
D2 15 CPU_D2
D1 14 CPU_D1
D0 13 CPU_D0
CE 22
OE 24 ROM0
OE 24 ROM1
GND
ROM_8M8
ROM[3:0]
ROM1
ROM0
U1
U17
74LS02
74LS74
VCC
PRE
CLR
CLK
D
Q
Q1
CPU_A[23:1]
J1
STR .156
L1
4700NH
C20
.1UF
C48
470UF
GND
U16
U25
U22
U23
DRAM_D15 59
DRAM_D14 58
DRAM_D13 57
DRAM_D12 56
DRAM_D11 55
DRAM_D10 54
DRAM_D9 52
DRAM_D8 53
DRAM_D7 75
DRAM_D6 77
DRAM_D5 80
DRAM_D4 79
DRAM_D3 81
DRAM_D2 84
DRAM_D1 83
DRAM_D0 2
RAM_D15 39
RAM_D14 38
RAM_D13 37
RAM_D12 36
RAM_D11 34
RAM_D10 33
RAM_D9 32
RAM_D8 31
RAM_D7 10
RAM_D6 9
RAM_D5 8
RAM_D4 7
RAM_D3 5
RAM_D2 4
RAM_D1 3
RAM_D0 2
D15
D14
D13
D12
D11
D10
D9
D8
D7
D6
D5
D4
D3
D2
D1
D0
DRAM_260
A8 26 RAM_A8
A7 25 RAM_A7
A6 24 RAM_A6
A5 23 RAM_A5
A4 22 RAM_A4
A3 19 RAM_A3
A2 18 RAM_A2
A1 17 RAM_A1
A0 16 RAM_A0
LCAS 29
UCAS 28
RAS 14
WE 13
OE 27
OE
WR 70 DRAM_WR
RAS 69 RAS
UCAS 3 UCAS
LCAS 1 LCAS
MUX 71 ADD_MUX
SEL 51 ADD_SEL
RAM_A[8:0]
RAM_A8 4
RAM_A7 7
RAM_A6 9
RAM_A5 12
RAM_A4 4
RAM_A3 7
RAM_A2 9
RAM_A1 12
G 15
S 1
1A 2 CPU_A18
1B 3 CPU_A9
2A 5 CPU_A17
2B 6 CPU_A8
3A 11 CPU_A16
3B 10 CPU_A7
4A 14 CPU_A15
4B 13 CPU_A6
1A 2 CPU_A14
1B 3 CPU_A5
2A 5 CPU_A13
2B 6 CPU_A4
3A 11 CPU_A12
3B 10 CPU_A3
4A 14 CPU_A11
4B 13 CPU_A2
1Y
2Y
3Y
4Y
74LS257
J8
7X2
R14
R13
R12
R15
R16
R17
100
DIS_EN 5 DIS_EN
ROW_DATA 6 ROW_DATA
ROW_CLK 7 ROW_CLK
COL_LATCH 8 COL_LATCH
SER_CLK 9 SER_CLK
SER_DATA 10 SER_DATA
C47 C46 C45 C44 C43 C42
10PF
DRAM 39 DRAM
CS 44 CS
UDS 41 UDS
LDS 43 LDS
CPU_R/W 37 CPU_R/W
DTACK 36 DTACK
CPU_CLK 64 CLK_IN
IRQ4 38 DIS_IRQ
IRQ1 42 IRQ
RESET 34 POR
BLANK 35 BLANK
COM_CLK 47 COM_CLK
R1
COM_CLK
33 OHM
MAR 15 1996
CAPCOM COIN-OP, INC.
TITLE
SYS_CPU
PROJECT ENGINEER
MARK COLDEBELLA
ASSEMBLY #
A0015405
DATE
FEBRUARY 29,1996
SHEET #
5 OF 6
REV
-

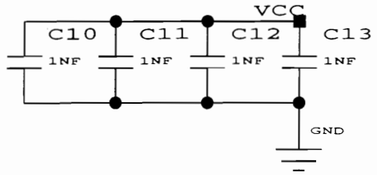

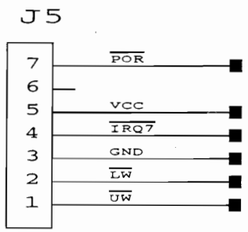

CPU_D[15:0]

CPU_A[23:1]

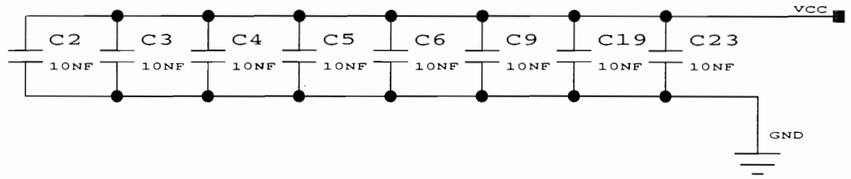

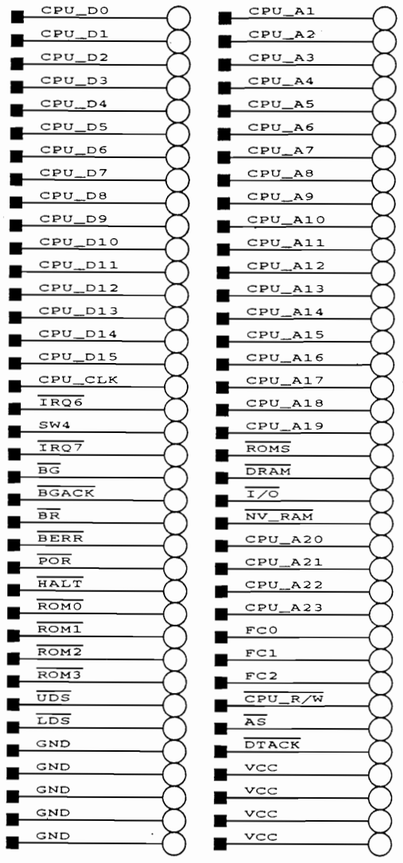

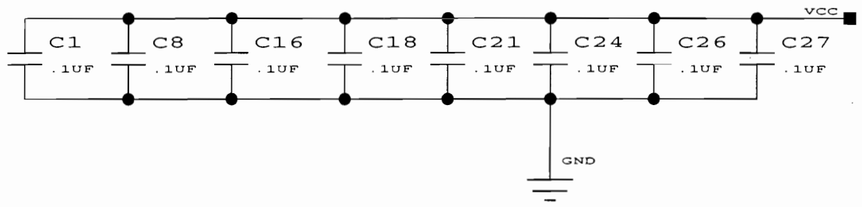

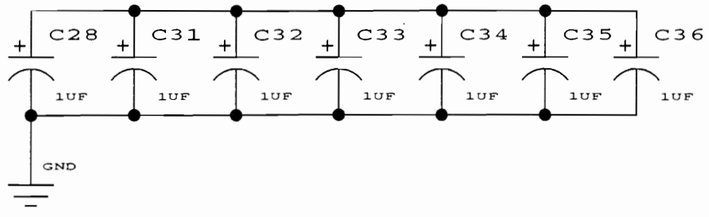

MAR 1 5 1996

CAPCOM COIN-OP, INC.

TITLE SYS_CPU		
PROJECT ENGINEER MARK COLDEBELLA	ASSEMBLY # A0015405	
DATE FEBRUARY 29, 1996	SHEET # 6 OF 6	REV -

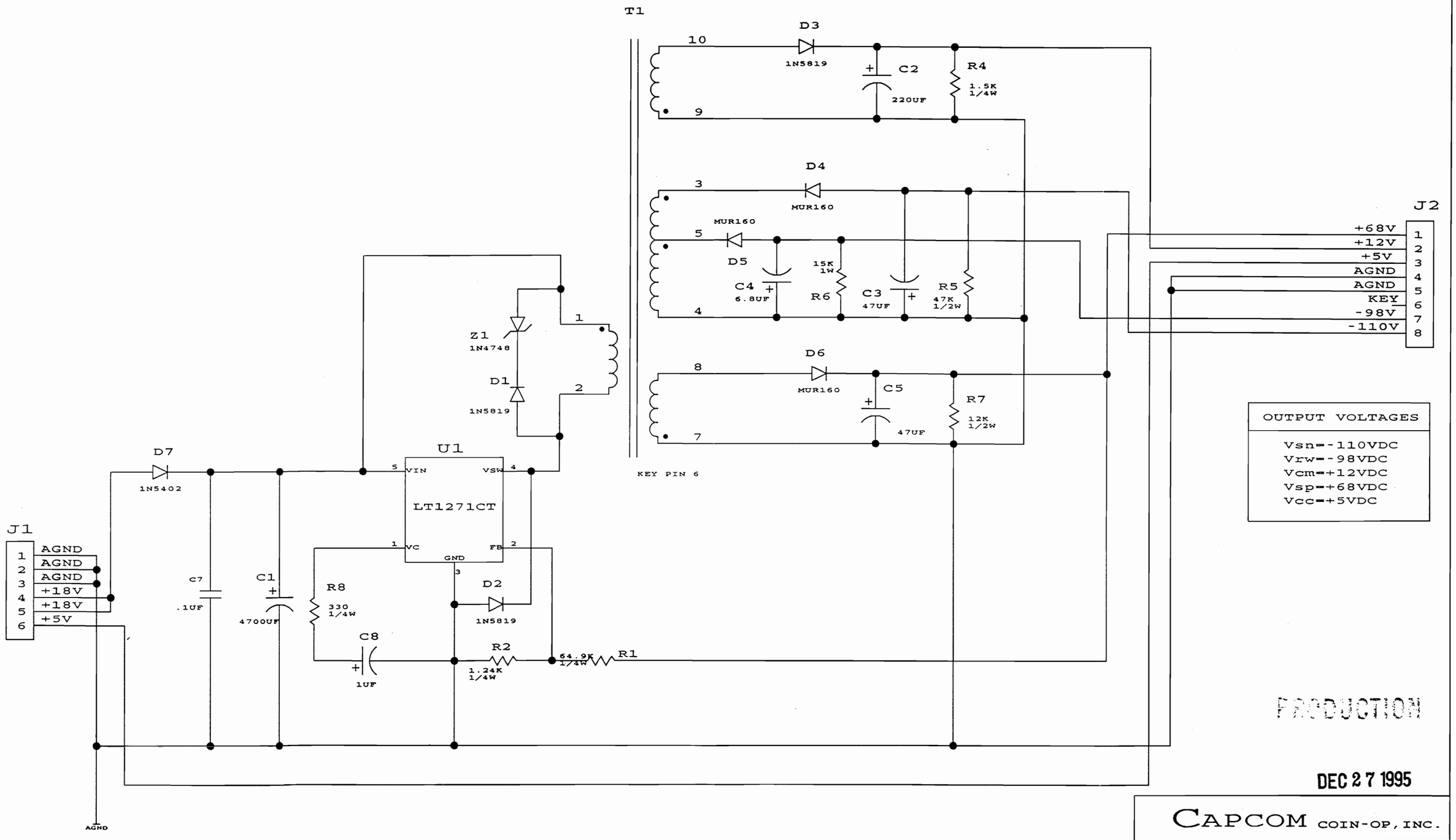

PRODUCTION

DEC 2 7 1995

CAPCOM COIN-OP, INC.	
TITLE DOT DISPLAY SWITCHING POWER SUPPLY	
PROJECT ENGINEER STEVE MILEWSKI/KD	ASSEMBLY # A0015505
DATE 11/22/95	SHEET # 1 OF 1 / REV -

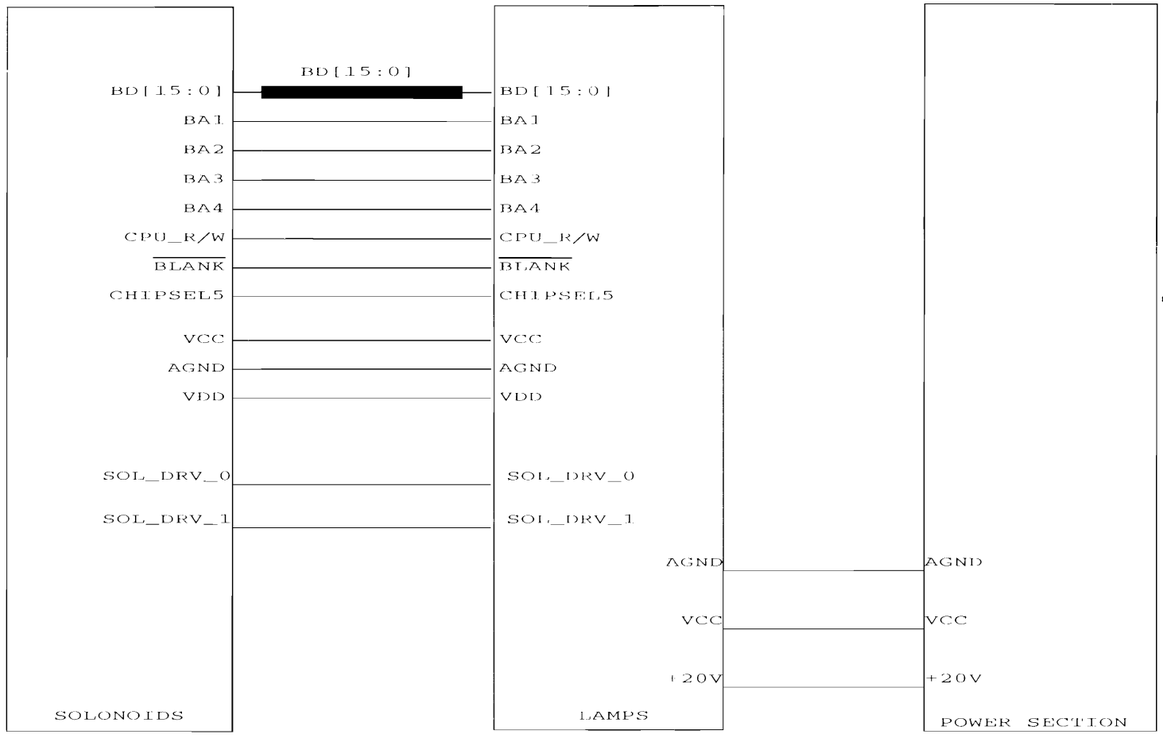

PCB B0017703

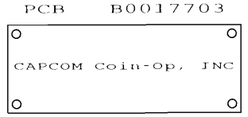

LOW COST POWER/DRIVER PC BOARD

CAPCOM COIN-OP, INC.

TITLE (MAIN1.1) PINBALL POWER DRIVER	
PROJECT ENGINEER GREG TOPEL	ASSEMBLY # A0017703
DATE 2/29/96	SHEET # 1 OF 8 / REV

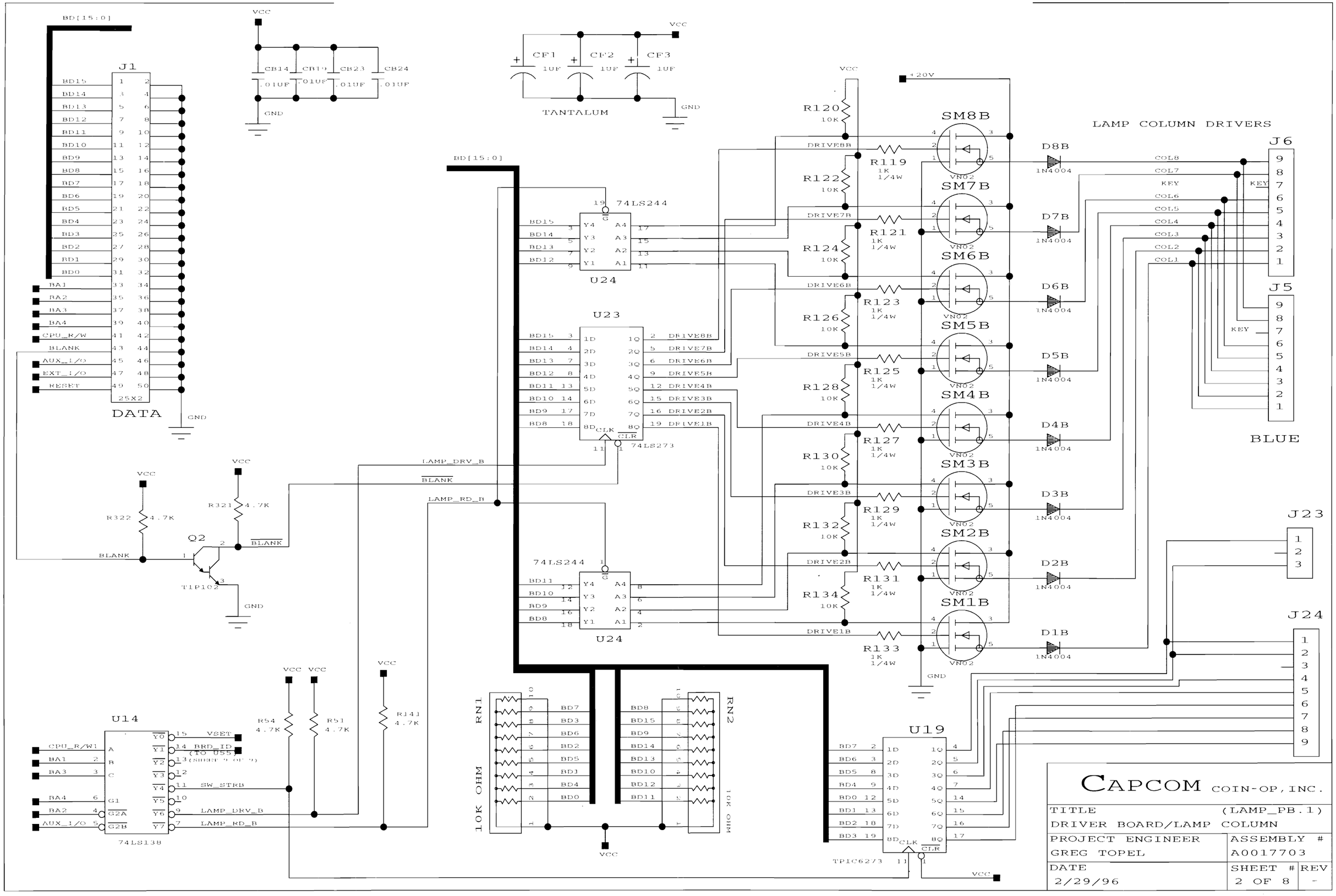

CAPCOM COIN-OP, INC.

TITLE (LAMP_PB.1) DRIVER BOARD/LAMP COLUMN	
PROJECT ENGINEER GREG TOPEL	ASSEMBLY # A0017703
DATE 2/29/96	SHEET # 2 OF 8 / REV -

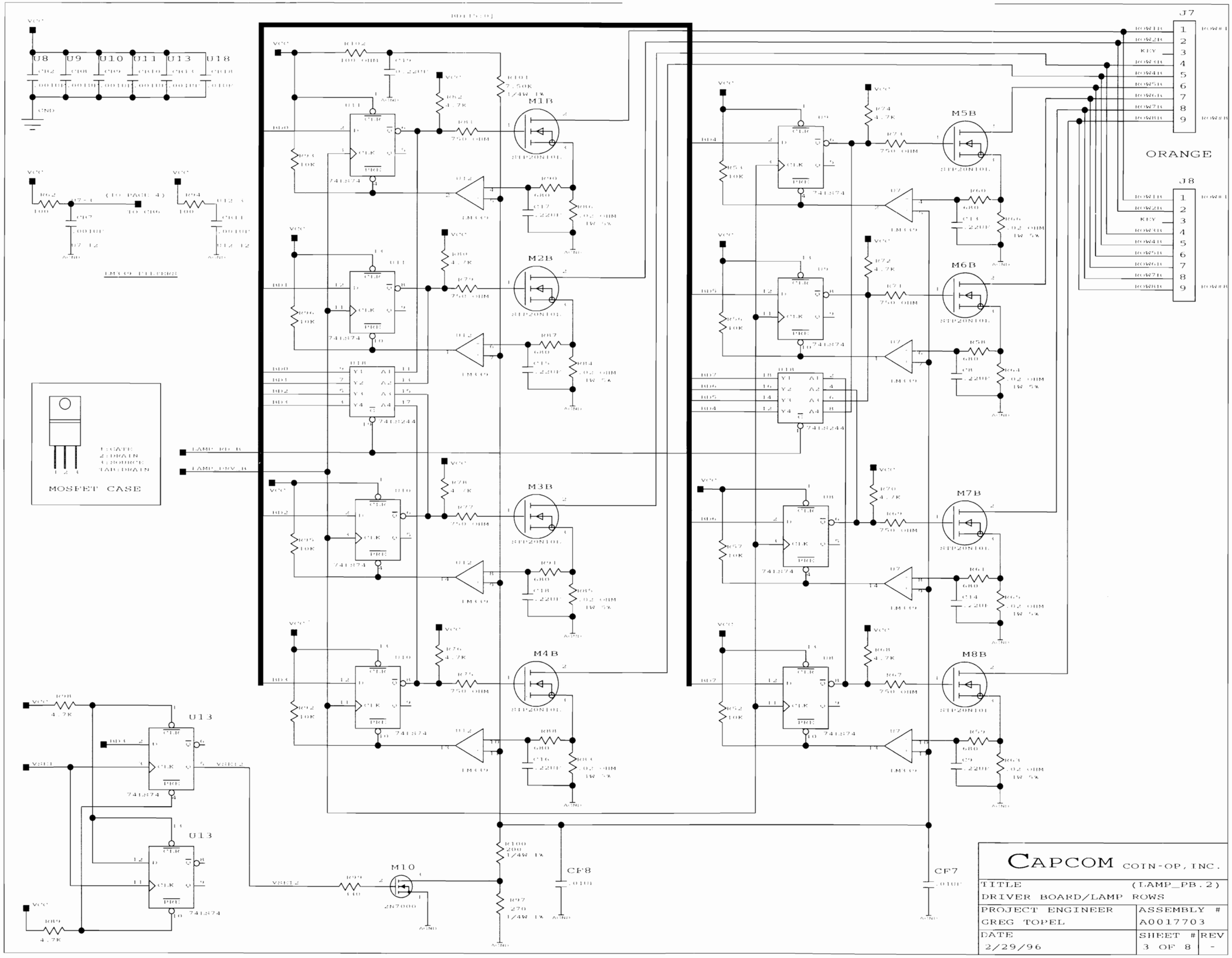

CAPCOM COIN-OP, INC.

TITLE (LAMP_PB.2) DRIVER BOARD/LAMP ROWS	
PROJECT ENGINEER GREG TOPEL	ASSEMBLY # A0017703
DATE 2/29/96	SHEET # 3 OF 8 / REV -

BOLT SOL

U15 U16 U26 U34 U28
C001 C002 C003 C004 C005 C006
.001UF .001UF .001UF .001UF .001UF .001UF
GND

U29 U30 U31
C007 C008 C009 C010
.001UF .001UF .001UF .001UF
GND

R165 100 OHM
C027 .001UF
U27 14 GND

U33 8
C033 .001UF
U33 12 GND

LM339 FILTERS

BOLT SOL

R160 100 OHM
C27 .22UF
U28 1, 2
R159 10K
R169 4.7K
R170 750 OHM
R162 7.50K 1/4W 1%
S1 STP20N10L
U27 14
LM339
R164 56 OHM
C26 .22UF
R167 .02 OHM 1W 5%
AGND

R172 4.7K
R171 750 OHM
R154 10K
S2 STP20N10L
R157 56 OHM
C24 .22UF
R165 .02 OHM 1W 5%

U26 74HC244
U34 74HC244
BLANK

R173 4.7K
R174 750 OHM
R155 10K
S3 STP20N10L
R163 56 OHM
C25 .22UF
R168 .02 OHM 1W 5%

R176 4.7K
R175 750 OHM
R158 10K
S4 STP20N10L
R156 56 OHM
C23 .22UF
R166 .02 OHM 1W 5%
R161 470 1/4W
C16 .01UF

SOLENOID DECODE
U15 74HC240
R152 4.7K
R153 4.7K
R151 4.7K
R150 4.7K
BA0 BA1 BA2 BA3 BA4 BA5 BA6 EXT I/O
EL SOL DRV 0
EL SOL RD 0
SOL DRV 1
SOL RD 1

R200 100 OHM
C34 .22UF
R192 10K
R177 4.7K
R178 750 OHM
R204 7.50K 1/4W 1%
S5 STP20N10L
R202 56 OHM
C33 .22UF
R197 .02 OHM 1W 5%

R191 10K
R179 750 OHM
S6 STP20N10L
R190 56 OHM
C29 .22UF
R196 .02 OHM 1W 5%

R197 10K
R181 4.7K
R182 750 OHM
S7 STP20N10L
R201 56 OHM
C32 .22UF
R198 .02 OHM 1W 5%

R198 10K
R184 4.7K
R183 750 OHM
S8 STP20N10L
R189 56 OHM
C28 .22UF
R186 .02 OHM 1W 5%

VREF32
(TO PAGE 7)
C010 .01UF
R200 470 1/4W 1%

J17
SOL1 1
SOL2 2
SOL3 3
SOL4 4
SOL5 5
SOL6 6
SOL7 7
KEY 8
SOL8 9
BROWN

J18
SOL1 1
SOL2 2
SOL3 3
SOL4 4
SOL5 5
SOL6 6
SOL7 7
KEY 8
SOL8 9

DIODE TIE BACKS
ALL DIODES ARE 1N4004

J20
SOL1 D1 1
SOL2 D2 2
SOL3 D3 3
SOL4 D4
SOL5 D5
SOL6 D6
SOL7 D7
SOL8 D8

MOSFET CASE
1=GATE
2=DRAIN
3=SOURCE
TAB=DRAIN

CAPCOM COIN-OP, INC.

TITLE (DRIVER1.1)	
DRIVER BOARD/SOLENOIDS	
PROJECT ENGINEER	ASSEMBLY #
GREG TOPEL	A0017703
DATE	SHEET # / REV
2/29/96	4 OF 8 / -

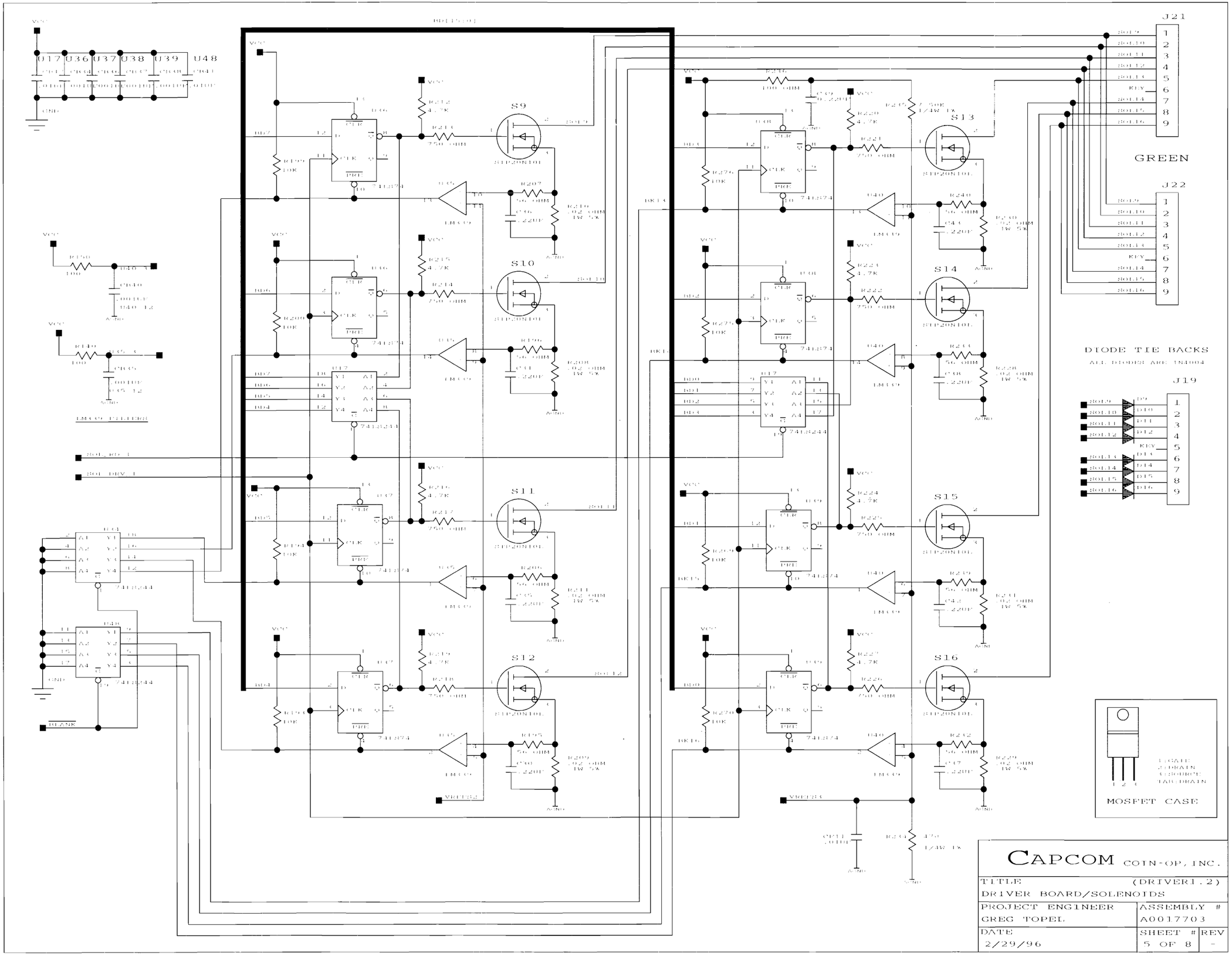

CAPCOM COIN-OP, INC.

TITLE (DRIVER1.2) DRIVER BOARD/SOLENOIDS	
PROJECT ENGINEER GREG TOPEL	ASSEMBLY # A0017703
DATE 2/29/96	SHEET # 5 OF 8 / REV -

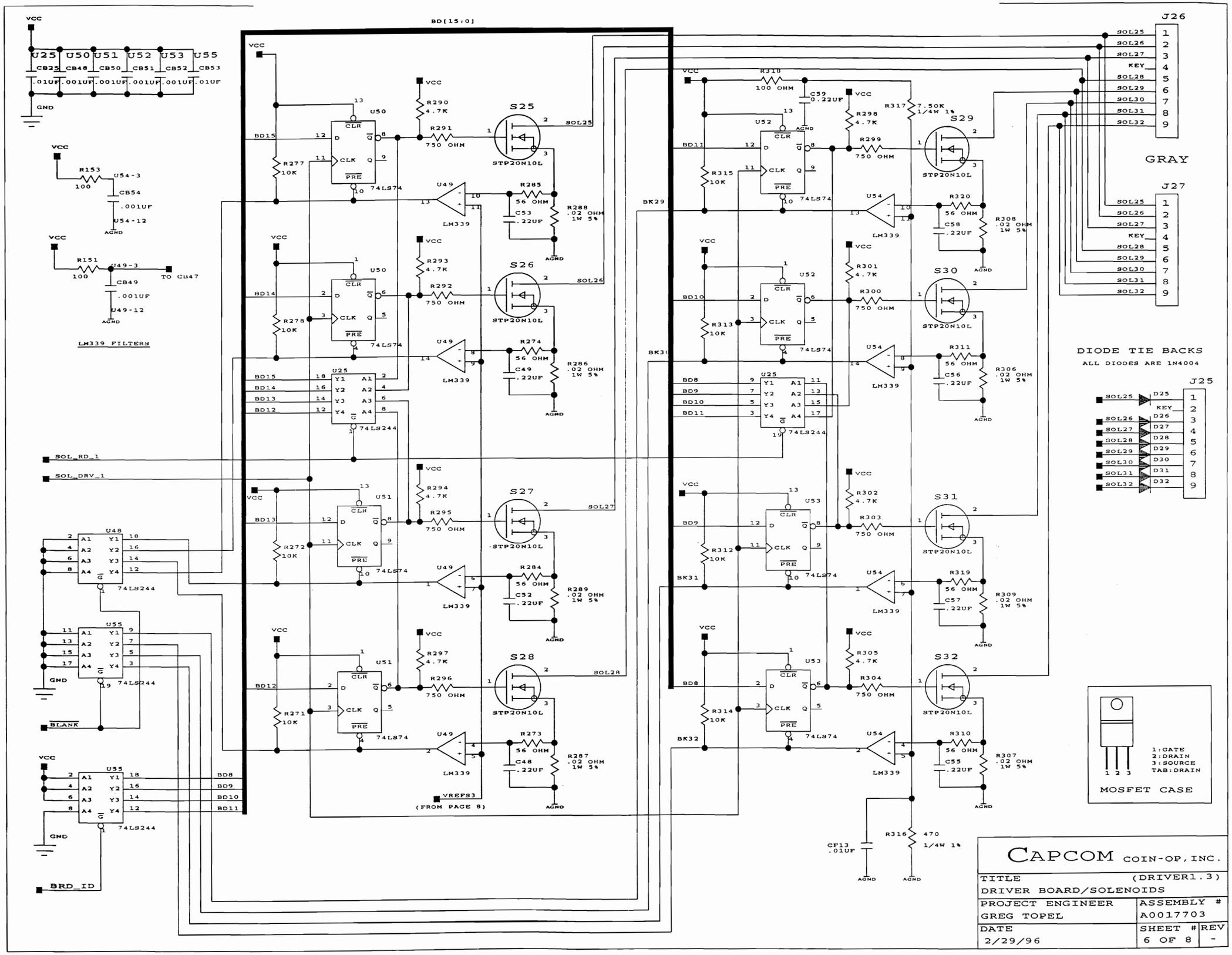
BD[15:0]
LM339 FILTERS
DIODE TIE BACKS
ALL DIODES ARE 1N4004
GRAY
J26
J27
J25
MOSFET CASE
1:GATE
2:DRAIN
3:SOURCE
TAB:DRAIN
SOL_RD_1
SOL_DRV_1
BLANK
BRD_ID
VREFS3
(FROM PAGE 8)
TO CB47
74LS74
74LS244
LM339
STP20N10L
CAPCOM COIN-OP, INC.
TITLE (DRIVER1.3)
DRIVER BOARD/SOLENOIDS
PROJECT ENGINEER
GREG TOPEL
ASSEMBLY #
A0017703
DATE
2/29/96
SHEET #
6 OF 8
REV
-

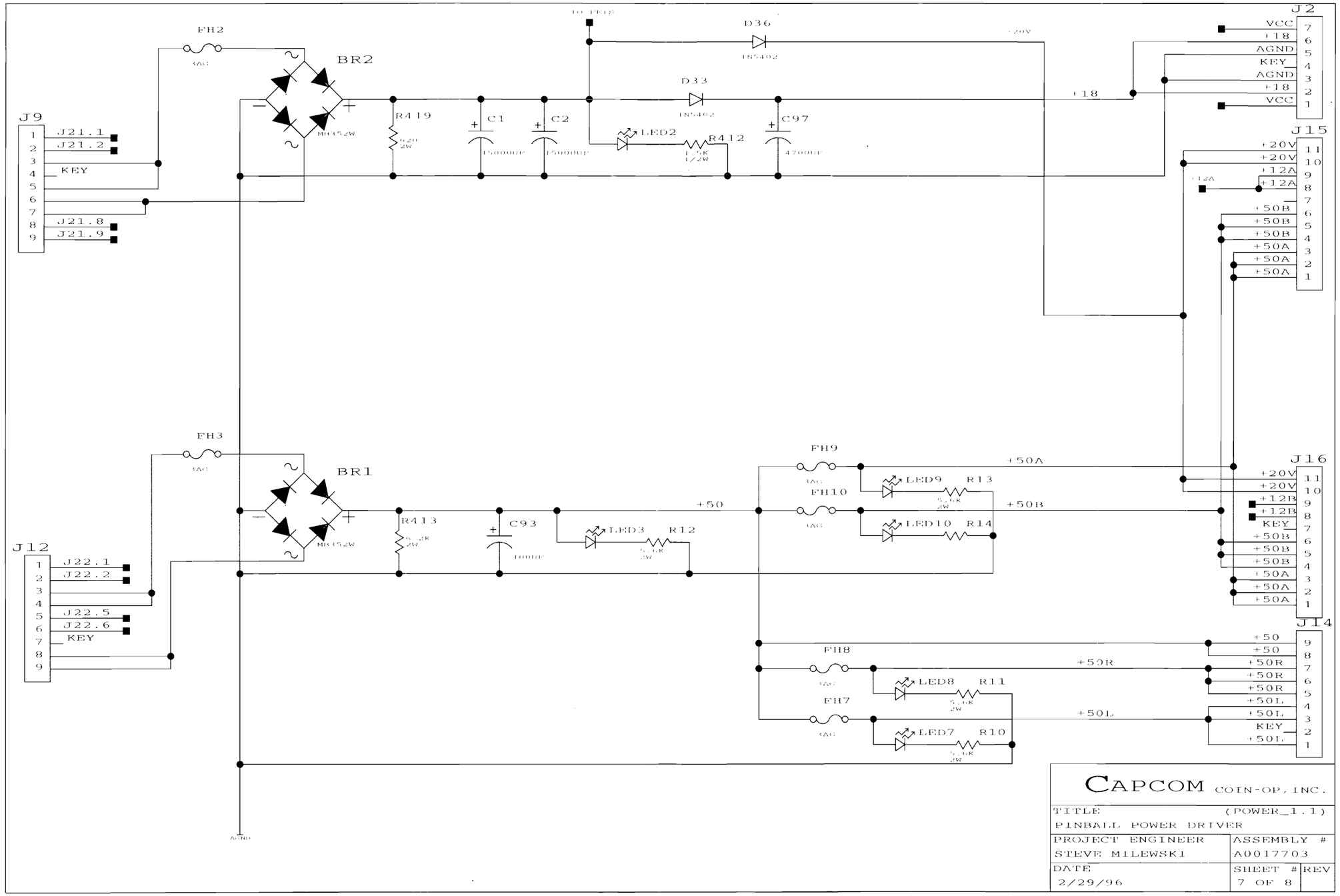

CAPCOM COIN-OP, INC.

TITLE (POWER_1.1) PINBALL POWER DRIVER		
PROJECT ENGINEER STEVE MILEWSKI	ASSEMBLY # A0017703	
DATE 2/29/96	SHEET # 7 OF 8	REV

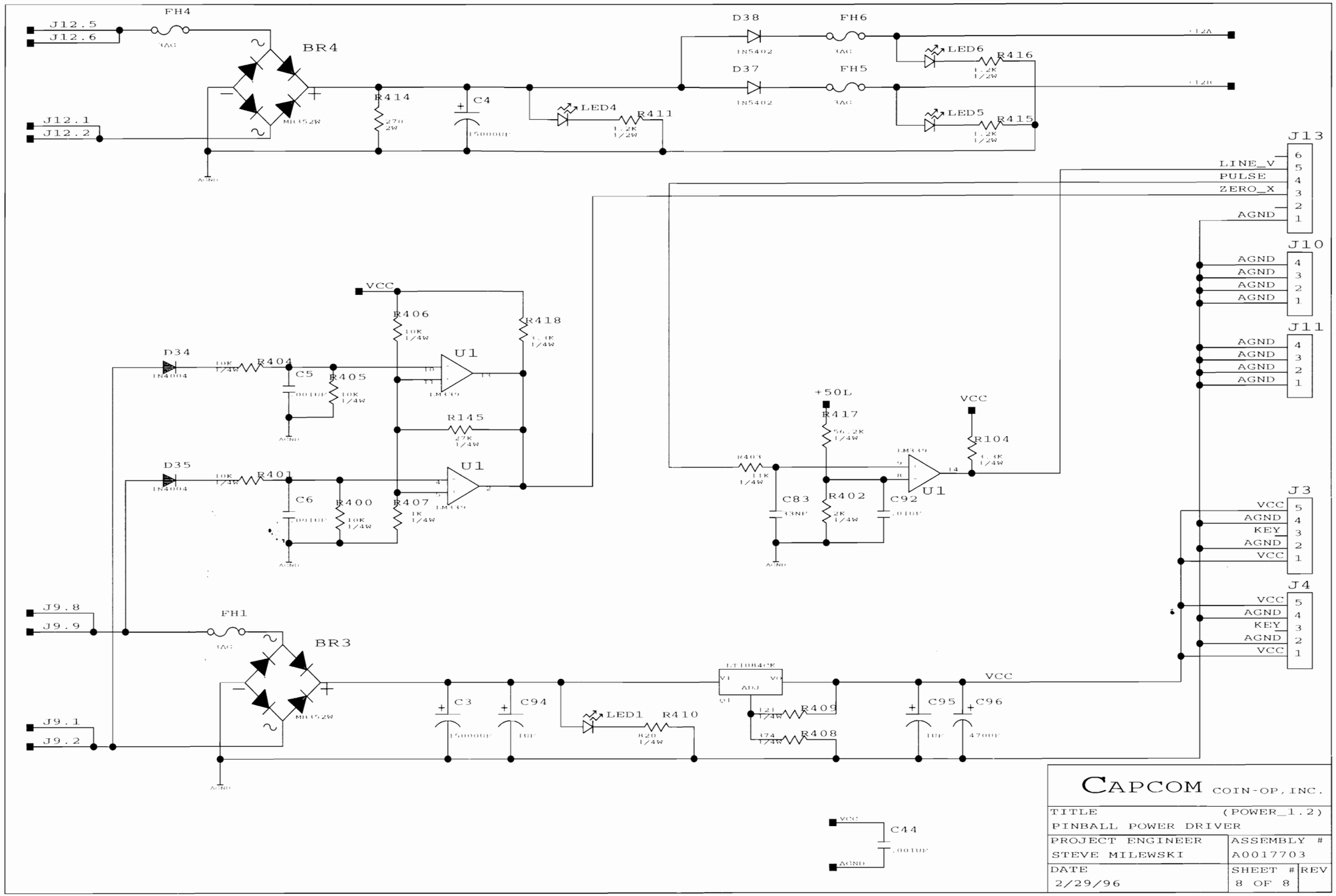

CAPCOM COIN-OP, INC.

TITLE (POWER_1.2)		
PINBALL POWER DRIVER		
PROJECT ENGINEER	ASSEMBLY #	
STEVE MILEWSKI	A0017703	
DATE	SHEET #	REV
2/29/96	8 OF 8	

REV	REASON
1	NPR 2/21/96 704

U24 87C52
U34 74LS373
U35 74LS373
U36 74LS373
U25 74LS08
U18 74LS04
U39 74LS161
U32 74HC74
U16 74LS161
U33 74LS00
U26 74LS08
U38 74LS161
U17 74LS161
U19 74LS04
U28 ROM_8M8
U29 ROM_8M8
U30 ROM_8M8
U31 ROM_8M8
U27 32Kx8 RAM SRAM32K8

COMPONENTS NOT INSERTED

CAPCOM COIN-OP, INC.

TITLE	MPEGSND.1
SINGLE MPEG PB SOUND PCB	
PROJECT ENGINEER	ASSEMBLY #
JOHN BOYDSTON	A0021701
DATE	SHEET # / REV
01/04/96	1 OF 4 / 1

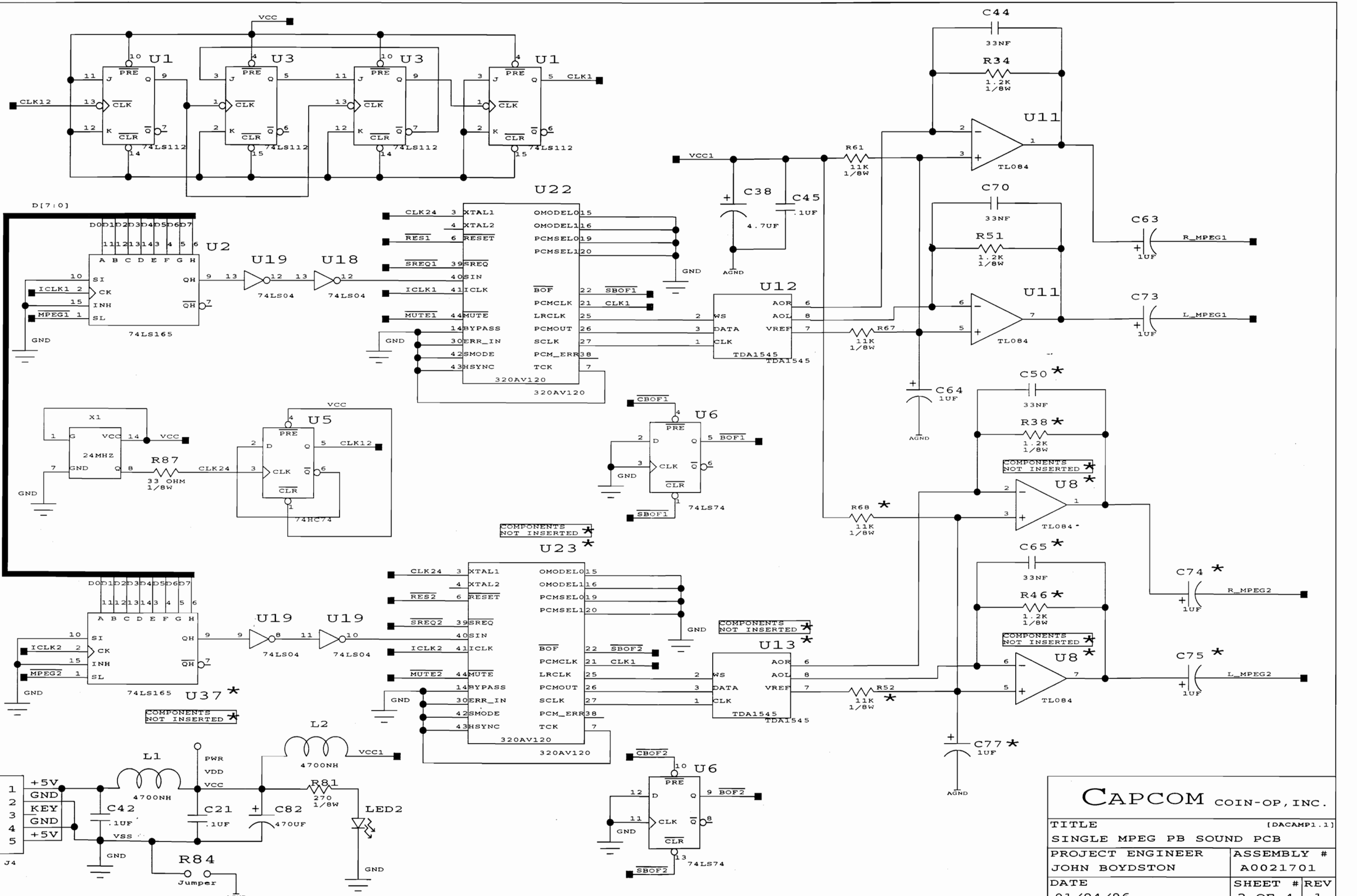

CAPCOM COIN-OP, INC.

TITLE	[DACAMP1.1]
SINGLE MPEG PB SOUND PCB	
PROJECT ENGINEER JOHN BOYDSTON	ASSEMBLY # A0021701
DATE 01/04/96	SHEET # 2 OF 4 / REV 1

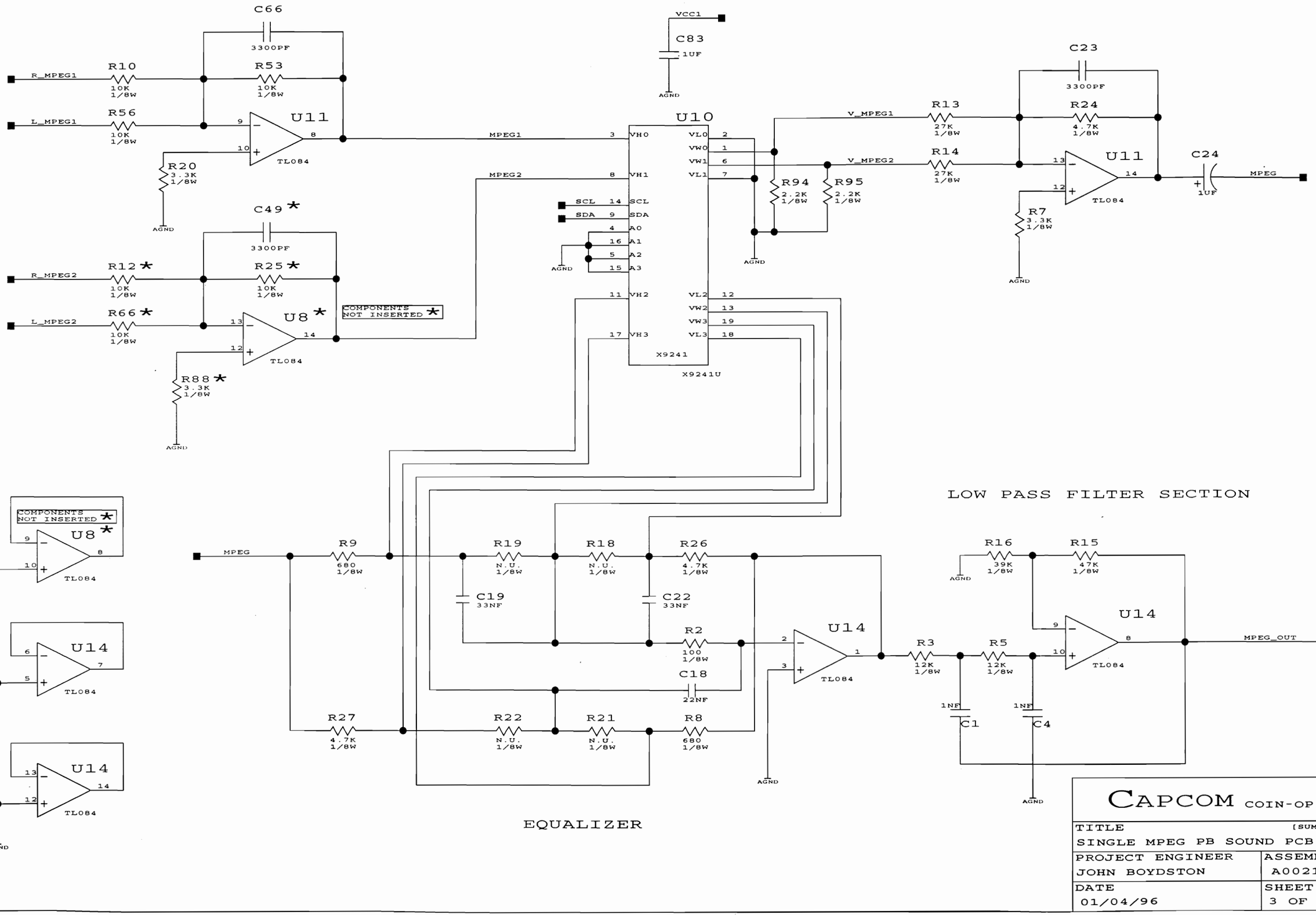

CAPCOM COIN-OP, INC.

TITLE [SUM_GAIN.1]		
SINGLE MPEG PB SOUND PCB		
PROJECT ENGINEER	ASSEMBLY #	
JOHN BOYDSTON	A0021701	
DATE	SHEET #	REV
01/04/96	3 OF 4	1

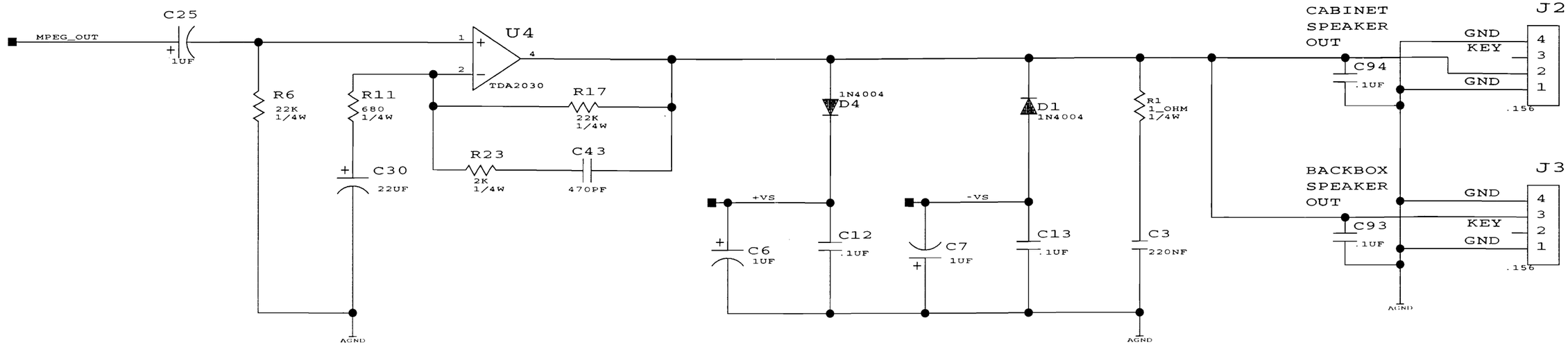

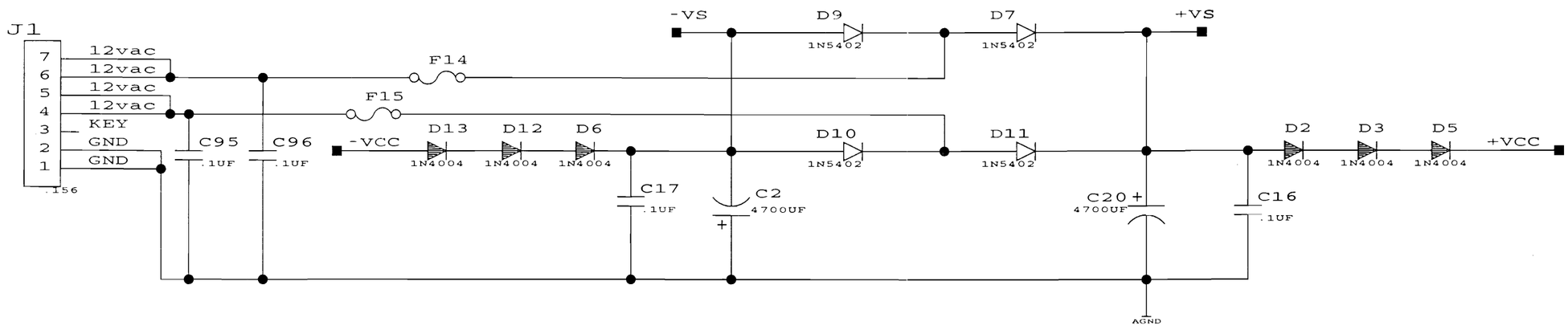

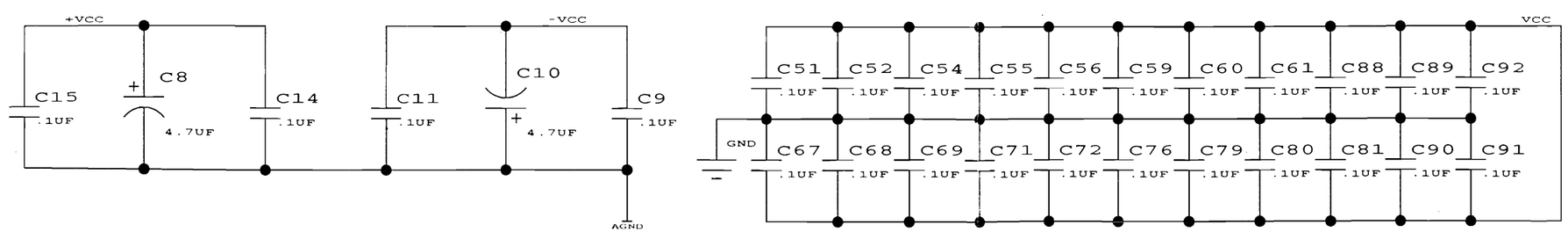

CAPCOM COIN-OP, INC.

TITLE [AMP-3.1] SINGLE MPEG PB SOUND PCB		
PROJECT ENGINEER JOHN BOYDSTON	ASSEMBLY # A0021701	
DATE 01/04/96	SHEET # 4 OF 4	REV 1

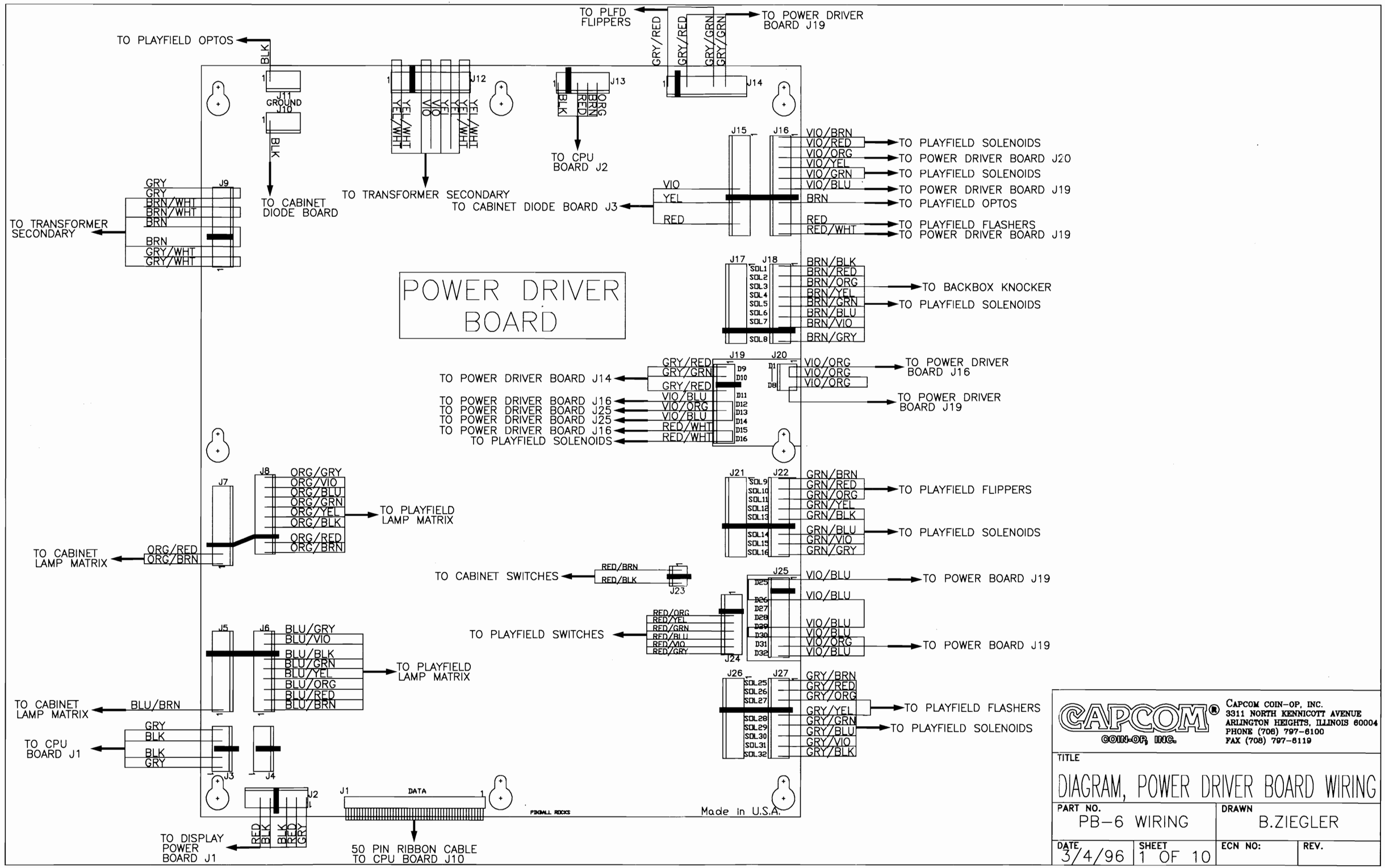

CAPCOM® COIN-OP, INC.

CAPCOM COIN-OP, INC.
3311 NORTH KENNICOTT AVENUE
ARLINGTON HEIGHTS, ILLINOIS 60004
PHONE (708) 797-6100
FAX (708) 797-6119

TITLE

DIAGRAM, POWER DRIVER BOARD WIRING

PART NO.	DRAWN		
PB-6 WIRING	B.ZIEGLER		
DATE 3/4/96	SHEET 1 OF 10	ECN NO:	REV.

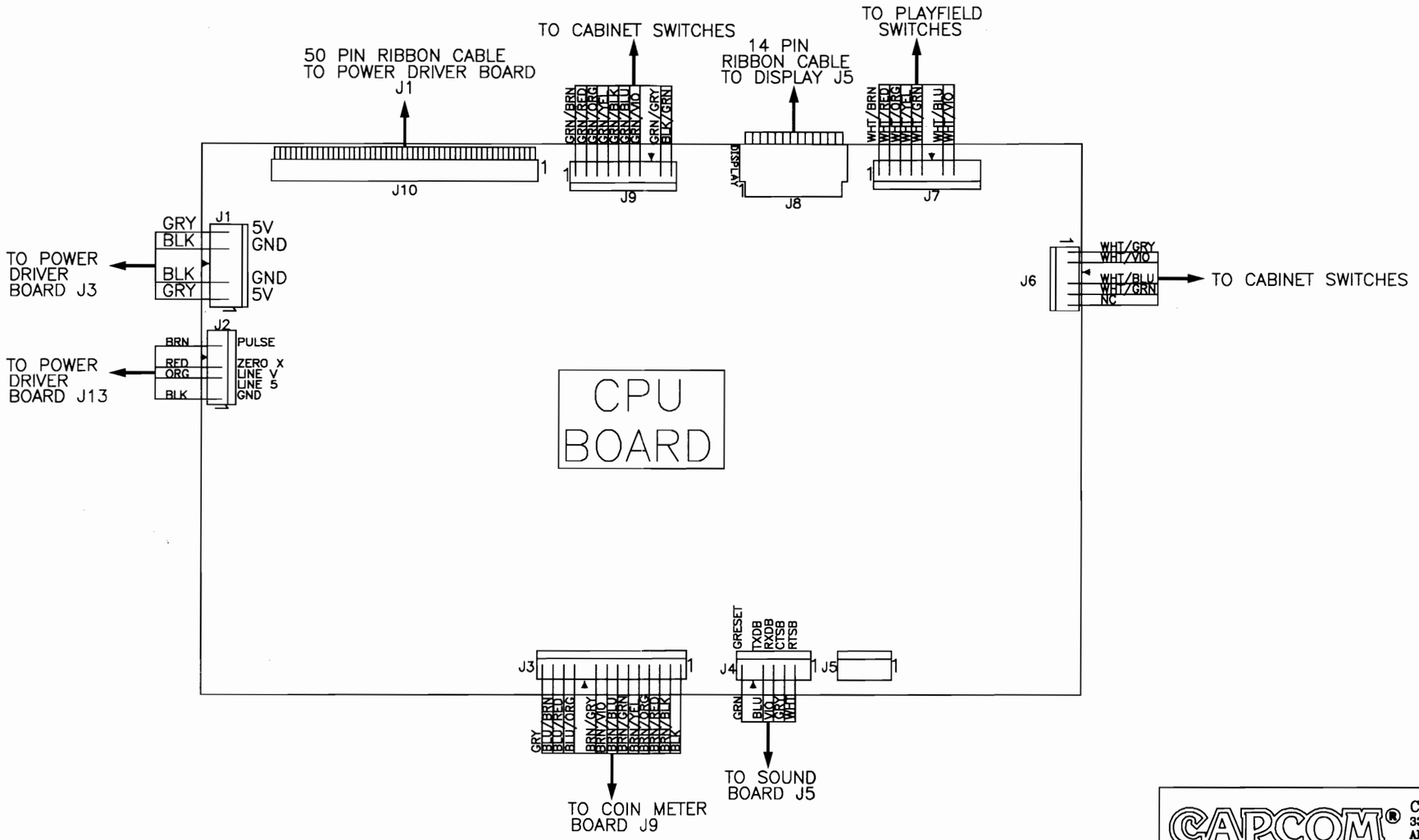

CAPCOM COIN-OP, INC.
3311 NORTH KENNICOTT AVENUE
ARLINGTON HEIGHTS, ILLINOIS 60004
PHONE (708) 797-6100
FAX (708) 797-6119

TITLE

DIAGRAM, CPU BOARD WIRING

PART NO.	DRAWN		
PB-6 WIRING	B.ZIEGLER		
DATE 3/4/96	SHEET 2 OF 10	ECN NO:	REV.

DISPLAY BOARD

P1
VSN ORG/RED
VRW ORG/BRN
GND BLK
GND BLK
VCC GRY
VCM GRY
VSP VIO
→ TO DISPLAY POWER J2

DISPLAY
J5
→ 14 PIN RIBBON CABLE TO CPU J8

DISPLAY POWER

J1
GND BLK
GND BLK
18V RED
18V RED
+5V GRY
→ TO POWER DRIVER BOARD J2

J2
VSP VIO
VCM YEL
VCC GRY
GND BLK
GND BLK
VRW ORG/BRN
VSN ORG/BRN
→ TO DISPLAY BOARD P1

SOUND BOARD

J4
GRY
BLK
BLK
GRY
← TO POWER DRIVER BOARD J13

J5
WHT CTS
GRY RTS
VIO TXD
BLU RXD
GRN GRESET
← TO CPU BOARD J8

TO LEFT & RIGHT B.B. SPEAKERS
BLK GRN/GRY
J3
B.B.

TO CABINET SPEAKER
WHT/BLK WHT/GRY
J2
CAB

TO TRANSFORMER SECONDARY P2
GRN/BLK GRN/BRN GRN/GRY
J1
CT AC AC

CAPCOM® COIN-OP, INC.
CAPCOM COIN-OP, INC.
3311 NORTH KENNICOTT AVENUE
ARLINGTON HEIGHTS, ILLINOIS 60004
PHONE (708) 797-6100
FAX (708) 797-6119

TITLE
DIAGRAM, DISPLAY & SOUND BOARD WIRING

PART NO.	DRAWN		
PB-6 WIRING	B.ZIEGLER		
DATE 3/4/96	SHEET 3 OF 10	ECN NO:	REV.

100 VAC

BRN

1040
2050
3060

BRN/WHT

CAPCOM PART NUMBER
C-00252-1

115 VAC

RED

1040
2050
3060

RED/WHT

CAPCOM PART NUMBER
C-00252-2

200 VAC

ORG

1040
2050
3060

CAPCOM PART NUMBER
C-00252-3

215 VAC

YEL

1040
2050
3060

CAPCOM PART NUMBER
C-00252-4

230 VAC

GRN

1040
2050
3060

CAPCOM PART NUMBER
C-00252-5

SERVICE OUTLET BOX

SERVICE OUTLET

SWITCH BOX

EMI FILTER
115/250 VAC
6A/40° C
50/60HZ

WHT
GRN
BLK

8A SLOW BLOW
115V GAMES
(5A SLOW BLOW
230V GAMES)

BLK

MOV
275V

FEMALE CONN.
FROM PRIMARY CABLE
P1

WHT/BLK 3
NC 2
BLK/WHT 1

WHT
BLK

MALE CONN.
FROM TRANSFORMER
PRIMARY P1

FEMALE CONN.
FROM TRANSFORMER
P3
TO FLOURESCENT LAMP (BB)

2 WHT
1 WHT/BLK

FEMALE CONN.
FROM TRANSFORMER
P2
(VOLTAGE CONFIGURATION)
(SEE ABOVE)

1 WHT
2 ORG
3 WHT/BLK
4 WHT/ORG
5 BRN
6 BLK

TRANSFORMER

100 VAC
WHT
WHT
WHT

15 VAC
ORG
WHT/BLK
WHT/BLK

15 VAC
WHT/ORG
BRN

100 VAC
BLK
BLK

FEMALE CONN.
SECONDARY OF TRANSFORMER
P4

+9.4 VAC N/L
GRY 1
GRY 2

+12.6 VAC N/L
NC 3
GRN/GRY 4

+12.6 VAC N/L
GRN/BLK 5
GRN/BRN 6

+12.6 VAC N/L
YEL 7
YEL 8

+55.6 VAC N/L
VIO 9
VIO 10
BRN 11
BRN 12

+16.4 VAC N/L

3 AMP SLOW BLOW
BLU
GRN
3 AMP SLOW BLOW

+16.5 VAC N/L

FEMALE CONN.
SECONDARY OF TRANSFORMER
P5

+12.2 VAC N/L
BLU/WHT 1
GRN/WHT 2
ORG/WHT 3
BLK/WHT 4

+55 VAC N/L

+55 VAC N/L

MALE CONN.
G.I. FUSE CABLE

3 AMP SLOW BLOW
ORG
BLK
3 AMP SLOW BLOW

BLU 1
GRN 3
BLU/WHT 2
GRN/WHT 4
NC 5
ORG/WHT 7
BLK/WHT 9
ORG 6
BLK 8

FEMALE CONN.
TO PLAYFIELD G.I.'S
P6

GRN/BLK 5
GRN/BRN 6
NC 3
GRN/GRY 4
GRY/WHT 2
BRN 11
BRN/WHT 12
GRY 1
YEL/WHT 8
VIO/GRY 9
YEL 7
VIO/WHT 10

P4
MALE CONN.
TO SECONDARY
OF TRANFORMER

GRN/BLK 1
GRN/BLK 2
KEY 3
GRN/BRN 4
GRN/BRN 5
GRN/GRY 6
GRN/GRY 7

TO SOUND
BOARD J1

GRY/WHT 1
GRY/WHT 2
BRN 3
KEY 4
BRN 5
BRN/WHT 6
BRN/WHT 7
GRY 8
GRY 9

TO POWER DRIVER
BOARD J9

VIO/GRY

50V INTERLOCK
SWITCH

VIO

YEL/WHT 1
YEL/WHT 2
VIO 3
VIO 4
YEL 5
YEL 6
KEY 7
VIO/WHT 8
VIO/WHT 9

TO POWER DRIVER
BOARD J12

MALE CONN.
TO G.I. FUSE CABLE
P6

1 BLU
2 BLU/WHT
3 GRN
4 GRN/WHT
5 NC
6 ORG
7 ORG/WHT
8 BLK
9 BLK/WHT

PLAYFIELD
G.I. LAMPS

X13
X12
X14 (2 IN CABINET)
X15

CAPCOM COIN-OP, INC.
3311 NORTH KENNICOTT AVENUE
ARLINGTON HEIGHTS, ILLINOIS 60004
PHONE (708) 797-6100
FAX (708) 797-6119

TITLE

DIAGRAM, CABINET PRIMARY,SECONDARY,&TRANSFORMER WIRING

PART NO.	DRAWN		
PB-6 WIRING	B.ZIEGLER		
DATE 3/4/96	SHEET 4 OF 10	ECN NO:	REV.

LAMP # & DESCRIPTION	
13	START
14	BUY-IN (CONTINUE)

SWITCH # & DESCRIPTION	
5	LEFT FLIPPER
6	RIGHT FLIPPER
7	START
8	COIN DOOR OPEN
21	UR. FLIPPER
30	TILT BOB
31	BUY-IN (CONTINUE)

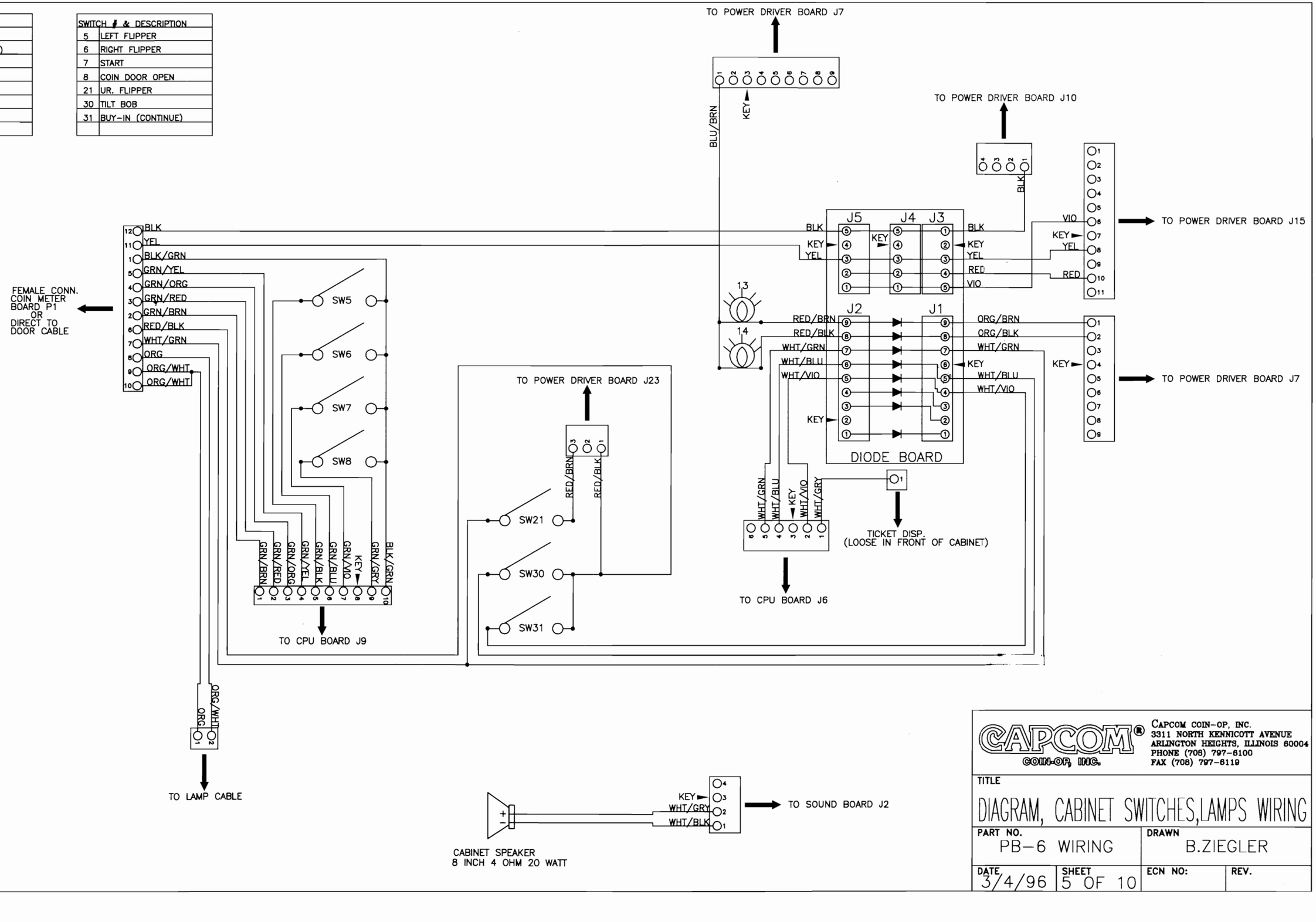

CAPCOM COIN-OP, INC.®
CAPCOM COIN-OP, INC.
3311 NORTH KENNICOTT AVENUE
ARLINGTON HEIGHTS, ILLINOIS 60004
PHONE (708) 797-6100
FAX (708) 797-6119

TITLE

DIAGRAM, CABINET SWITCHES,LAMPS WIRING

PART NO.	DRAWN		
PB-6 WIRING	B.ZIEGLER		
DATE 3/4/96	SHEET 5 OF 10	ECN NO:	REV.

DEVICE # & DESCRIPTION	
S1	OUTHOLE
S2	TROUGH
S3	KNOCKER
S4	LEFT SLINGSHOT
S5	RIGHT SLINGSHOT
S6	KICKER
S7	R. DROP RESET
S8	BONUS SAUCER

DEVICE # & DESCRIPTION	
S9	L. FLIPPER
S10	R. FLIPPER
S11	UR. FLIPPER
S12	CENTER POST UP
S13	L. DROP RESET
S14	CENTER POST DOWN
S15	RIGHT TOPGATE
S16	LEFT TOPGATE

DEVICE # & DESCRIPTION	
S17	UNUSED
S18	UNUSED
S19	UNUSED
S20	UNUSED
S21	UNUSED
S22	UNUSED
S23	UNUSED
S24	UNUSED

DEVICE # & DESCRIPTION	
S25	CNTR. POCKET L.
S26	CNTR. POCKET C.
S27	PLUNGER FLASH
S28	CNTR. POCKET FLASH
S29	R. STAR BUMPER
S30	C. STAR BUMPER
S31	L. STAR BUMPER
S32	CNTR. POCKET R.

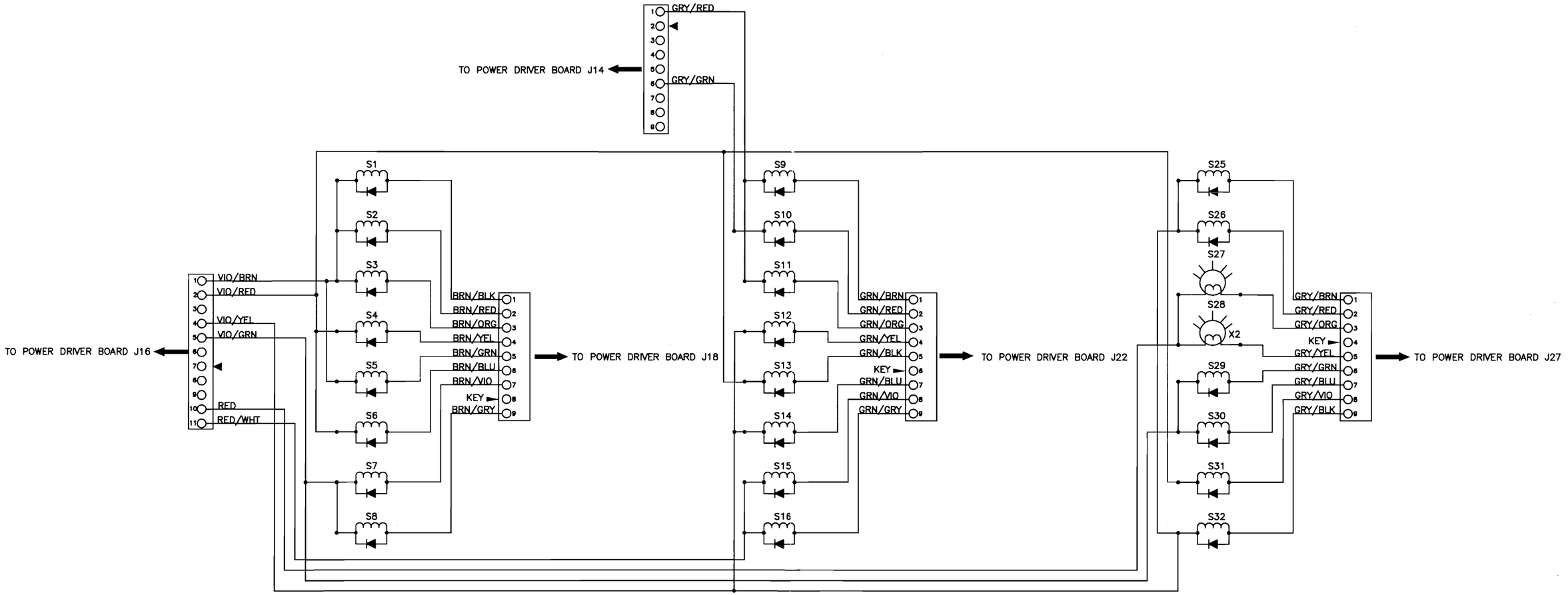

CAPCOM COIN-OP, INC.
3311 NORTH KENNICOTT AVENUE
ARLINGTON HEIGHTS, ILLINOIS 60004
PHONE (708) 797-6100
FAX (708) 797-6119

TITLE

DIAGRAM,PLFD DEVICES,FLASHERS,WIRING

PART NO.	DRAWN		
PB-6 WIRING	B.ZIEGLER		
DATE 3/4/96	SHEET 6 OF 10	ECN NO:	REV.

SWITCH # & DESCRIPTION	
17	UNUSED
18	UNUSED
19	UNUSED
20	UNUSED
21	UR. FLIPPER
22	UNUSED
23	UNUSED
24	UNUSED

SWITCH # & DESCRIPTION	
25	UNUSED
26	UNUSED
27	UNUSED
28	UNUSED
29	SLAM TILT
30	TILT BOB
31	BUY IN
32	UNUSED

SWITCH # & DESCRIPTION	
33	L. FLIPPER EOS
34	R. FLIPPER EOS
35	OUTHOLE
36	TROUGH OPTO 1
37	TROUGH OPTO 2
38	TROUGH OPTO 3
39	UNUSED
40	UNUSED

SWITCH # & DESCRIPTION	
41	L. SLINGSHOT
42	R. SLINGSHOT
43	SHOOTER LANE
44	L. INLANE
45	R. INLANE
46	L. OUTLANE
47	R. OUTLANE
48	UNUSED

SWITCH # & DESCRIPTION	
49	R. DROP L.
50	R. DROP C.
51	R. DROP R.
52	R. DROP STANDUP
53	L. ORBIT OPTO
54	R. ORBIT OPTO
55	CAPTIVE STANDUP
56	UNUSED

SWITCH # & DESCRIPTION	
57	L. STAR BUMPER
58	C. STAR BUMPER
59	R. STAR BUMPER
60	L. TOPLANE
61	C. TOPLANE
62	R. TOPLANE
63	BANKSHOT LANE
64	UNUSED

SWITCH # & DESCRIPTION	
65	CNTR. PKT. OPTO
66	CENTER POST
67	BONUS SAUCER
68	CNTR. PKT. L.
69	CNTR. PKT. C.
70	CNTR. PKT. R.
71	UR. FLIPPER EOS
72	UNUSED

SWITCH # & DESCRIPTION	
73	L. DROP L.
74	L. DROP C.
75	L. DROP R.
76	L. DROP STANDUP
77	L. LITE SUPER Q
78	R. LITE SUPER Q
79	CAPTIVE ROLLOVER
80	UNUSED

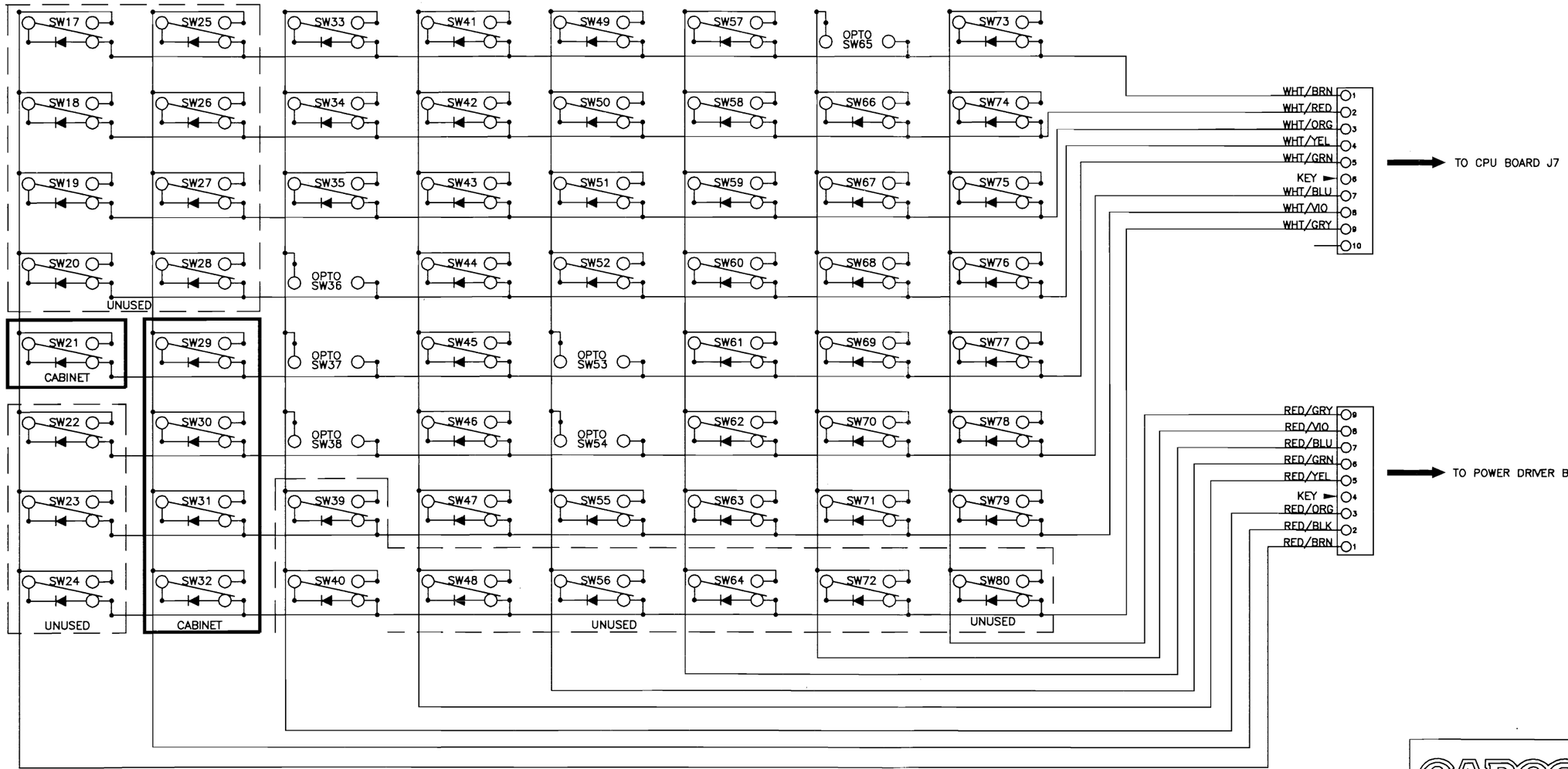

NOTE: THIS IS A TYPICAL OPTO CIRCUIT THE COMPONENTS IN THE DASHED LINES ARE THE ACTUAL BOARDS

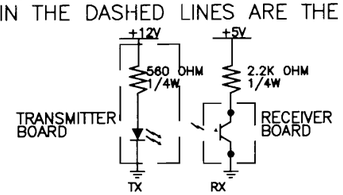

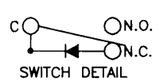

NOTE: ALL SWITCHES IN DASHED LINES ARE UNUSED
ALL SWITCHES IN SOLID LINES ARE IN THE CABINET

NOTE: ALL OPTOS SHOWN ARE RECEIVER SIDE ONLY
TRANSMITTER POWER COMES FROM POWER DRIVER BOARD J16

CAPCOM COIN-OP, INC.
3311 NORTH KENNICOTT AVENUE
ARLINGTON HEIGHTS, ILLINOIS 60004
PHONE (708) 797-6100
FAX (708) 797-6119

TITLE

DIAGRAM, PLAYFIELD SWITCHES WIRING

PART NO.	DRAWN		
PB-6 WIRING	B.ZIEGLER		
DATE 3/4/96	SHEET 7 OF 10	ECN NO:	REV.

LAMP	NUMBER & DESCRIPTION
11	START BUTTON
12	BUY IN BUTTON
13	CAPTIVE BALL 1
14	CAPTIVE BALL 2
15	CAPTIVE BALL 3
16	SHOOT AGAIN
17	R. SUPER CUE
18	CAPTIVE BALL EB

LAMP	NUMBER & DESCRIPTION
21	1 BALL
22	2 BALL
23	JACKPOT
24	L. SUPER CUE
25	3 BALL
26	9 BALL
27	10 BALL
28	11 BALL

LAMP	NUMBER & DESCRIPTION
31	6 BALL
32	14 BALL
33	L. DROP SPOT 9
34	9 BALL POINTS
35	ROTATION OPTION
36	9 BALL XBALL
37	8 BALL OPTION
38	9 BALL SPCL

LAMP	NUMBER & DESCRIPTION
41	L. CNTR. PKT. GI
42	R. CNTR. PKT. GI
43	RIGHT TOPLANE
44	KICKER
45	4 BALL
46	LITE SUPER CUE L.
47	12 BALL
48	CENTER TOPLANE

LAMP	NUMBER & DESCRIPTION
51	ORBIT SPOT 9
52	CALL YOUR SHOT
53	COLLECT BONUS
54	8 BALL
55	13 BALL
56	LITE SUPER CUE R.
57	5 BALL
58	BALLORAMA

LAMP	NUMBER & DESCRIPTION
61	9 BALL OPTION
62	CNTR. POCKET L.
63	CNTR. POCKET C.
64	CNTR. POCKET R.
65	LEFT TOPLANE
66	R. DROP SPOT 9
67	15 BALL
68	7 BALL

LAMP	NUMBER & DESCRIPTION
71	BANK SHOT
72	BONUS RACK 1
73	BONUS RACK 2
74	BONUS RACK 3
75	BONUS RACK 4
76	BONUS RACK 5
77	BONUS RACK 6
78	BONUS RACK 7

LAMP	NUMBER & DESCRIPTION
81	BONUS RACK 8
82	BONUS RACK 9
83	BONUS RACK 10
84	BONUS RACK 11
85	BONUS RACK 12
86	BONUS RACK 13
87	BONUS RACK 14
88	BONUS RACK 15

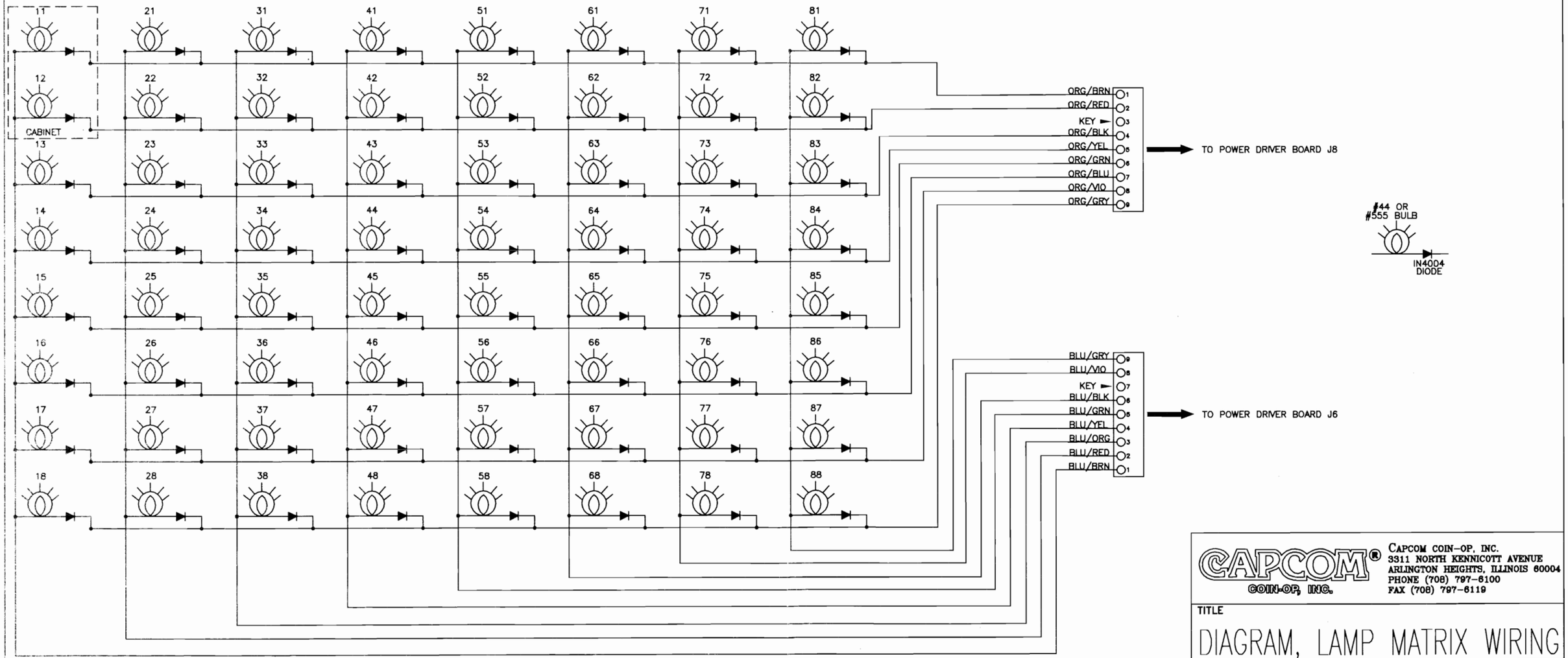

CAPCOM COIN-OP, INC.
3311 NORTH KENNICOTT AVENUE
ARLINGTON HEIGHTS, ILLINOIS 60004
PHONE (708) 797-6100
FAX (708) 797-6119

TITLE

DIAGRAM, LAMP MATRIX WIRING

PART NO.	DRAWN		
PB-6 WIRING	B.ZIEGLER		
DATE 3/4/96	SHEET 8 OF 10	ECN NO:	REV.

1 ENTRY C120
NRI G-13
MARS CASHFLOW 330
COIN ACCEPTORS

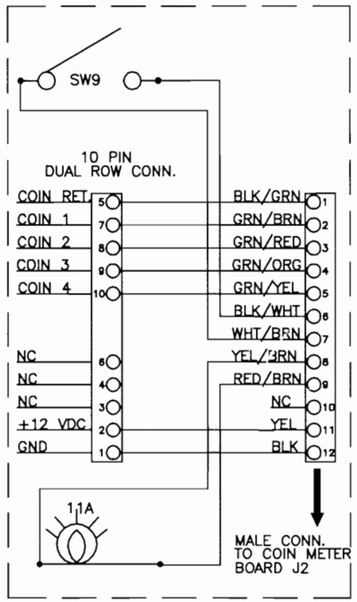

1 ENTRY C220
COIN ACCEPTOR

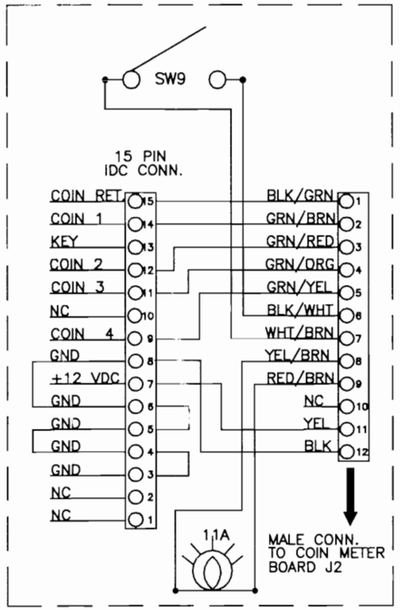

1 ENTRY MECHANICAL
COIN DOOR

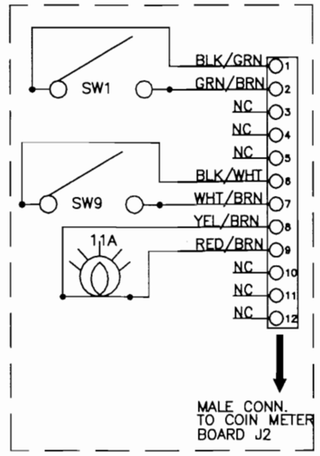

2 ENTRY MECHANICAL
COIN DOOR

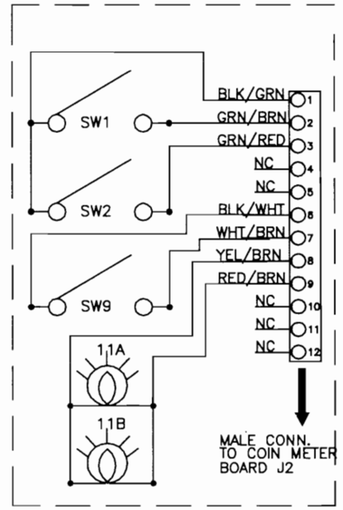

3 ENTRY MECHANICAL
COIN DOOR

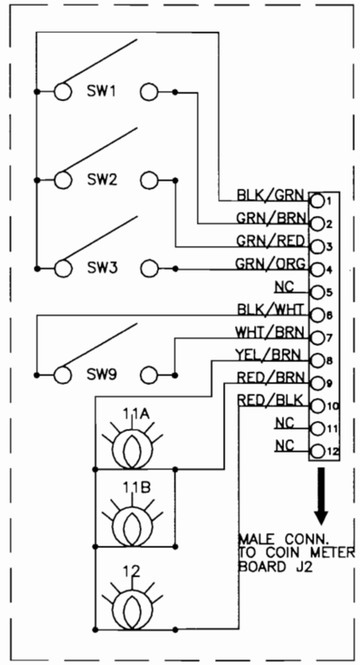

2 ENTRY C120
COIN ACCEPTOR

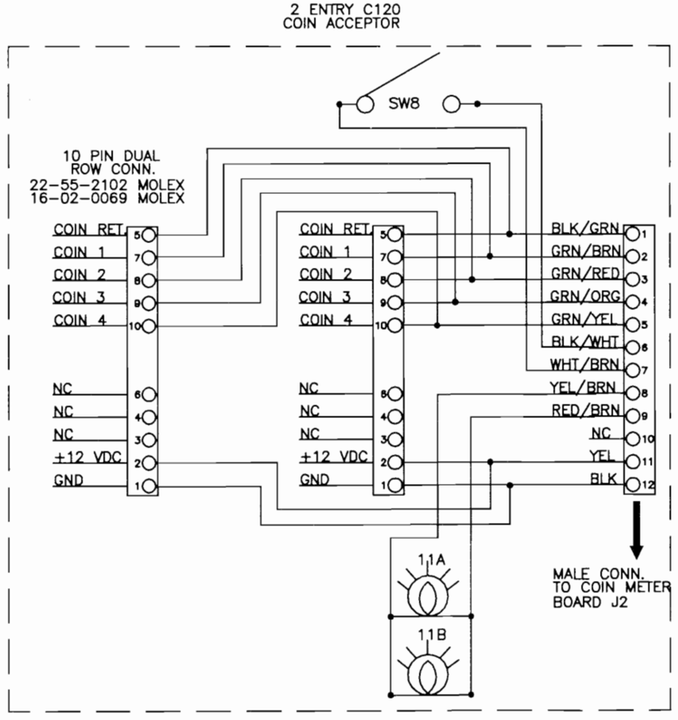

LAMP # & DESCRIPTION	
11	COIN DOOR 1&2
12	COIN DOOR 3&4

SWITCH # & DESCRIPTION	
1	COIN 1
2	COIN 2
3	COIN 3
4	COIN 4
9	SLAM

CAPCOM® COIN-OP, INC.
CAPCOM COIN-OP, INC.
3311 NORTH KENNICOTT AVENUE
ARLINGTON HEIGHTS, ILLINOIS 60004
PHONE (708) 797-6100
FAX (708) 797-6119

TITLE

DIAGRAM,COIN DOORS,WIRING

PART NO.	DRAWN		
PB-6 WIRING	B.ZIEGLER		
DATE 2/27/96	SHEET 9 OF 10	ECN NO:	REV.

GERMAN CONFIGURATION

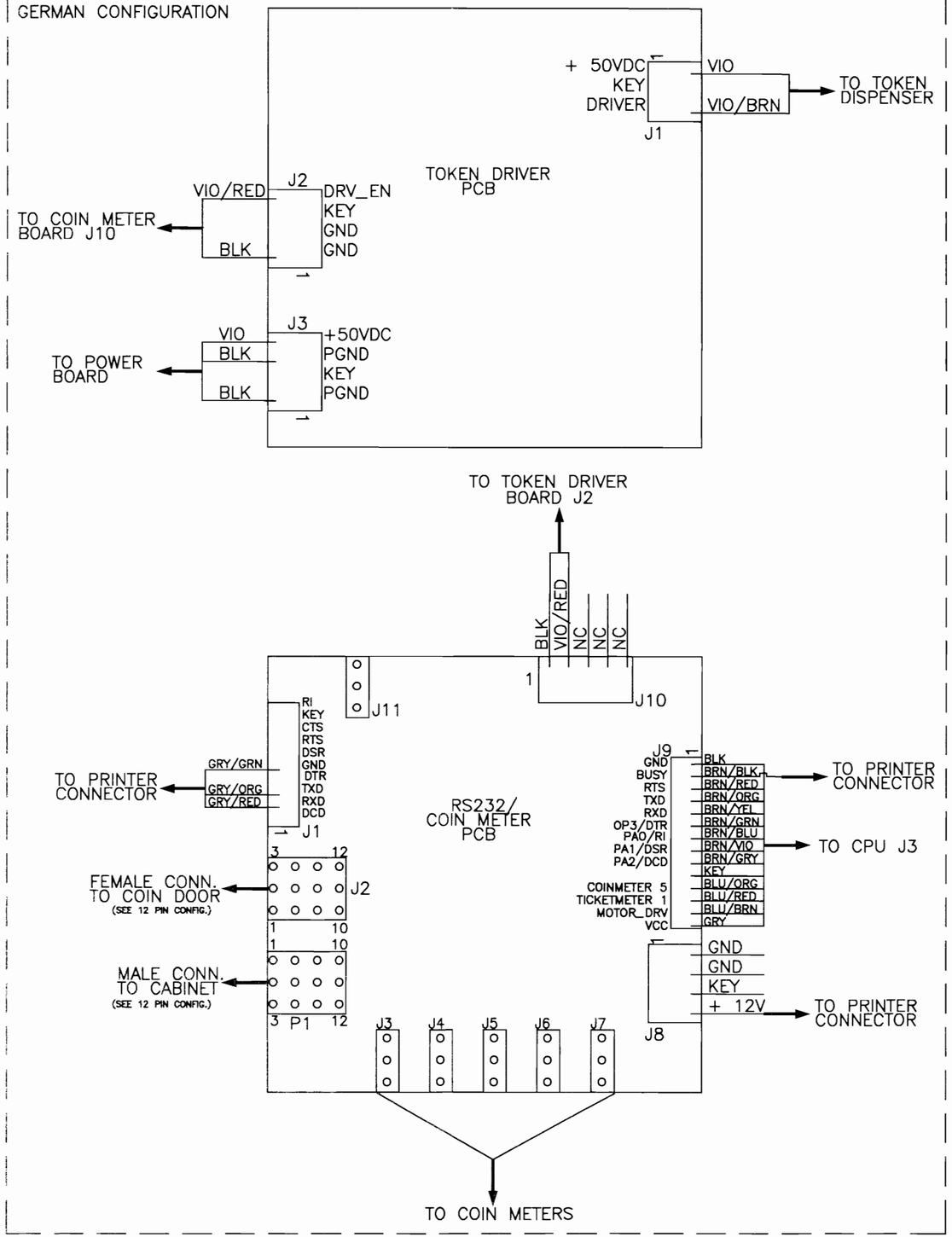

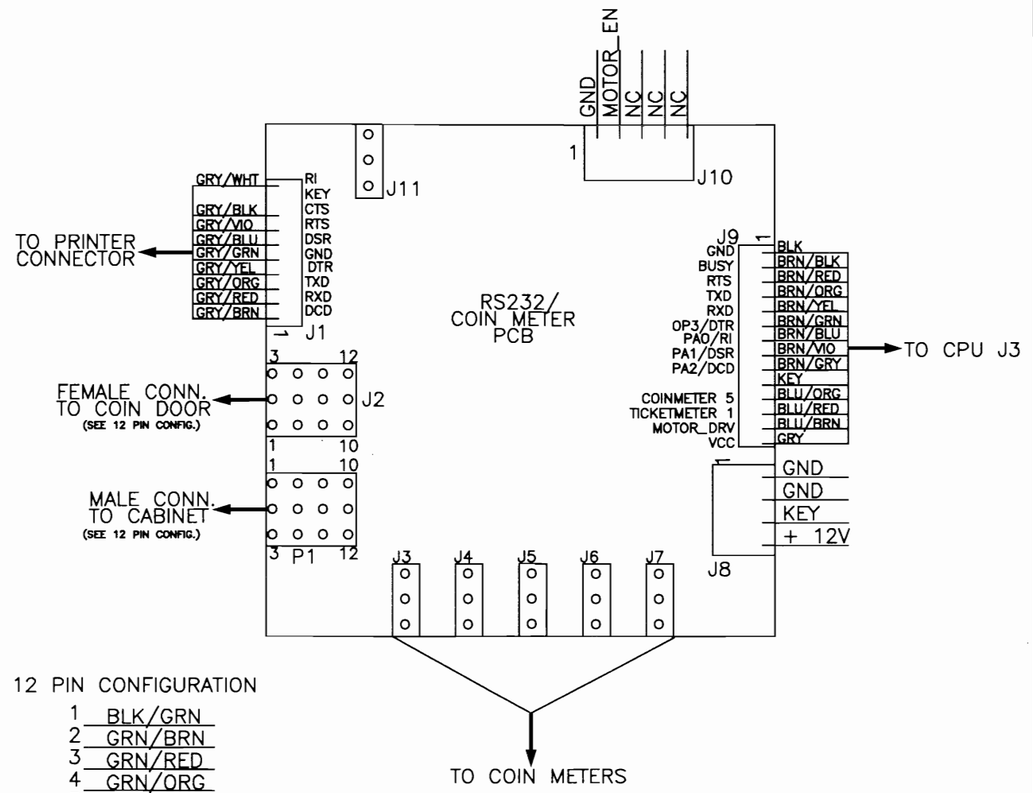

12 PIN CONFIGURATION

1	BLK/GRN
2	GRN/BRN
3	GRN/RED
4	GRN/ORG
5	GRN/YEL
6	BLK/WHT
7	WHT/BRN
8	YEL/BRN
9	RED/BRN
10	NC
11	YEL
12	BLK

CAPCOM COIN-OP, INC.
3311 NORTH KENNICOTT AVENUE
ARLINGTON HEIGHTS, ILLINOIS 60004
PHONE (708) 797-6100
FAX (708) 797-6119

TITLE

DIAGRAM,PRINTER INTERFACE,WIRING

PART NO.	DRAWN		
PB-6 WIRING	B.ZIEGLER		
DATE	SHEET	ECN NO:	REV.
2/27/96	10 OF 10		

AMENDMENT TO BREAKSHOT™ OPERATORS MANUAL PM00147

REFERENCE: *SCHEMATICS* SECTION OF THE MANUAL, CABINET PRIMARY, SECONDARY, & TRANSFORMER WIRING DIAGRAM, PAGE 4 OF 10

DESCRIPTION: THE TRANSFORMER SECONDARY OUTPUTS TO THE PLAYFIELD G.I.'S SHOULD EACH READ **+6.9VAC.** ALSO, THE G.I. FUSES SHOULD READ **5** AMP SLOW BLOW INSTEAD OF 3 AMP SLOW BLOW.

NOTE: SCHEMATIC CHANGES ARE SHOWN IN **BOLD**

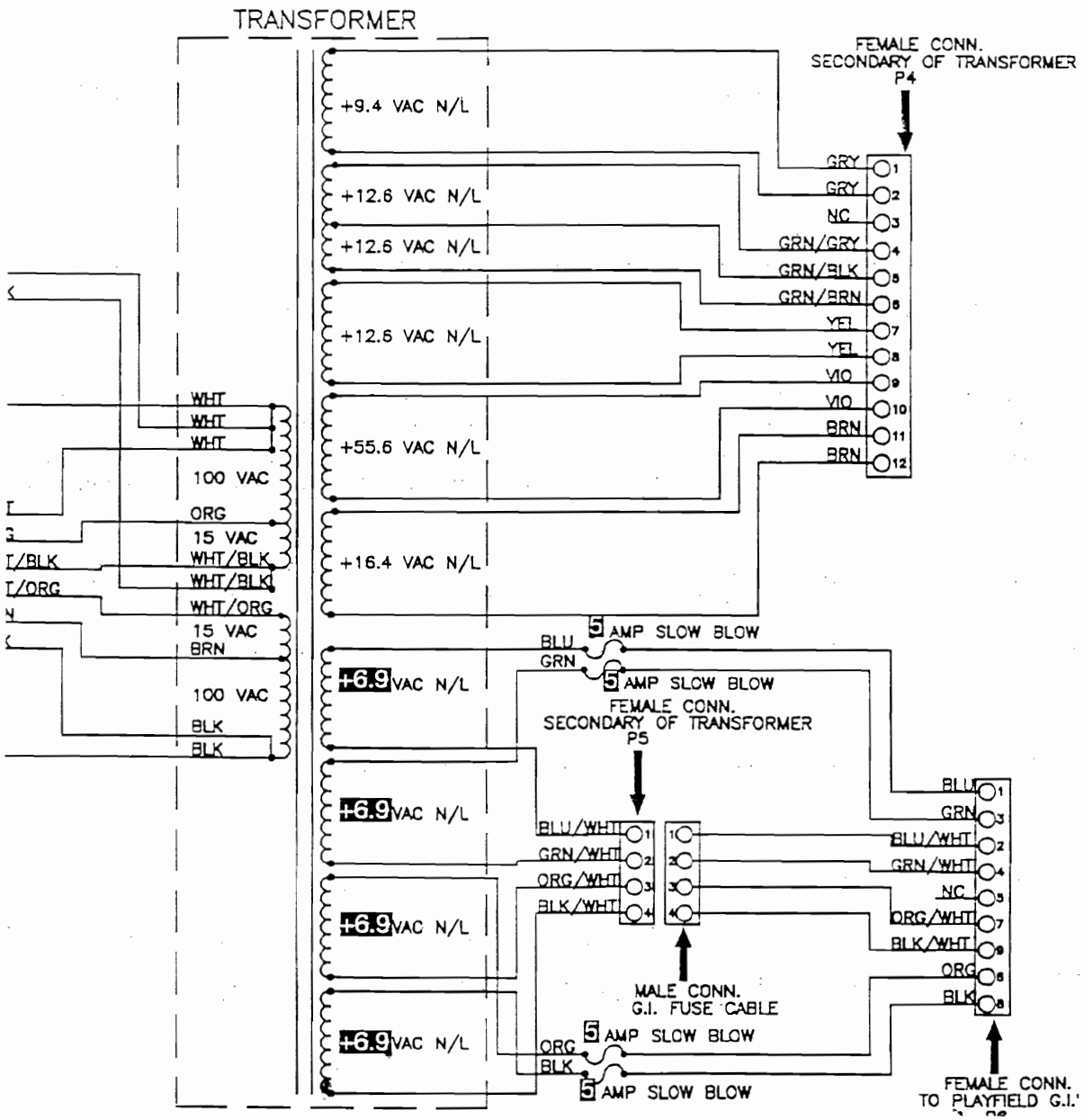

Proprietary and confidential information, not to be disclosed or copied without the express permission of CAPCOM® COIN-OP, INC.

LAMP MATRIX "A"

This matrix is not applicable to the "CAPCOM CLASSIC SERIES" of games.

LAMP MATRIX "B"

POWER DRIVER BOARD

CPU BOARD

Row \ Column	Column 1 J9/10.1 Blu/Brn	Column 2 J9/10.2 Blu/Red	Column 3 J9/10.3 Blu/Org	Column 4 J9/10.4 Blu/Yel	Column 5 J9/10.5 Blu/Grn	Column 6 J9/10.7 Blu/Blk	Column 7 J9/10.8 Blu/Vio	Column 8 J9/10.9 Blu/Gry
Row 1 J4/5.1 Org/Brn	(11) Start Button (CABINET)	(21) 1 Ball	(31) 6 Ball	(41) Left Center Pocket GI	(51) Orbit Spot 9 Ball	(61) 9 Ball Option	(71) Bank Shot Lane	(81) Bonus Rack 8
Row 2 J4/5.2 Org/Red	Not Used	(22) 2 Ball	(32) 14 Ball	(42) Right Center Pocket GI	(52) Call Your Shot	(62) Center Pocket Left	(72) Bonus Rack 1	(82) Bonus Rack 9
Row 3 J4/5.3 Org/Blk	(13) Captive Ball 1	(23) Jackpot (two)	(33) Left Drop Spot 9 Ball	(43) Right Toplane Diamond	(53) Collect Bonus	(63) Center Pocket Center	(73) Bonus Rack 2	(83) Bonus Rack 10
Row 4 J4/5.5 Org/Yel	(14) Captive Ball 2	(24) Left Super Cue	(34) 9 Ball Points	(44) Kickback	(54) 8 Ball	(64) Center Pocket Right	(74) Bonus Rack 3	(84) Bonus Rack 11
Row 5 J4/5.6 Org/Grn	(15) Captive Ball 3	(25) 3 Ball	(35) Rotation Option	(45) 4 Ball	(55) 13 Ball	(65) Left Toplane Diamond	(75) Bonus Rack 4	(85) Bonus Rack 12
Row 6 J4/5.7 Org/Blu	(16) Shoot Again	(26) 9 Ball	(36) 9 Ball Extra Ball	(46) Light Super Cue Left	(56) Light Super Cue Right	(66) Right Drop Spot 9 Ball	(76) Bonus Rack 5	(86) Bonus Rack 13
Row 7 J4/5.8 Org/Vio	(17) Right Super Cue	(27) 10 Ball	(37) 8 Ball Option	(47) 12 Ball	(57) 5 Ball	(67) 15 Ball	(77) Bonus Rack 6	(87) Bonus Rack 14
Row 8 J4/5.9 Org/Gry	(18) Captive Ball Extra Ball	(28) 11 Ball	(38) 9 Ball Special	(48) Center Toplane Diamond	(58) Ball -O- Rama	(68) 7 Ball	(78) Bonus Rack 7	(88) Bonus Rack 15

Cabinet | **Playfield**

Note: Rows 1 & 2 and Columns 1 & 2 should be run to both the cabinet and the playfield.

FUSE INFORMATION

LOCATION	COMPONENT	REF.	FUSE TYPE	PART NO.
BACKBOX	POWER DRIVER BOARD	F1	SLO-BLO 7.0A 250V 3AG	FS00100-07
BACKBOX	POWER DRIVER BOARD	F2-3	SLO-BLO 10.0A 250V 3AG	FS00100-10
BACKBOX	POWER DRIVER BOARD	F4-6	SLO-BLO 3.0A 250V 3AG	FS00100-03
BACKBOX	POWER DRIVER BOARD	F7-10	SLO-BLO 4.0A 250V 3AG	FS00100-04
BACKBOX	SOUND BOARD	F14,F15	SLO-BLO 3.0A 250V 3AG	FS00100-03
CABINET	FUSE BLOCK	-------	SLO-BLO 5.0A 250V 3AG	FS00100-05
*CABINET	LINE FUSE	-------	SLO-BLO 8.0A 250V 3AG	FS00100-08
**CABINET	LINE FUSE	-------	SLO-BLO 5.0A 250V 3AG	FS00100-05

*NOTE: FOR GAMES CONFIGURED FOR 100V AC OR 115V AC SOURCE VOLTAGES.

**NOTE: FOR GAMES CONFIGURED FOR 200V AC, 215V AC, OR 230V AC SOURCE VOLTAGES.

Proprietary and confidential information, not to be disclosed or copied without the express permission of CAPCOM® COIN-OP, INC.

NOTICE

This equipment has been tested and found to comply with the limits for a Class A digital device, pursuant to Part 15 of the FCC Rules. These limits are designed to provide reasonable protection against harmful interference when the equipment is operated in a commercial environment. This equipment generates, uses, and can radiate radio frequency energy and, if not installed and used in accordance with the instruction manual, may cause harmful interference to radio communications. Operation of this equipment in a residential area is likely to cause harmful interference, in which case the user will be required to correct the interference at his own expense.

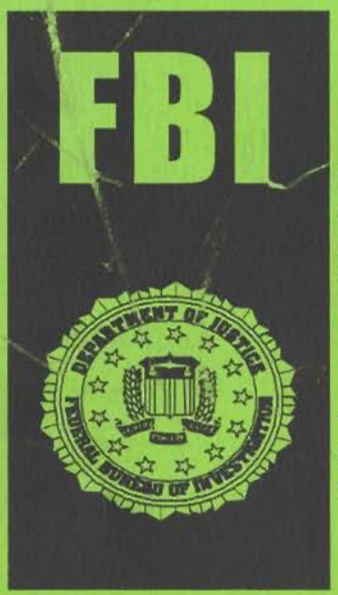

WARNING

Federal law provides severe civil and criminal penalties for the unauthorized reproduction, distribution, or exhibition of copyrighted audiovisual works and video games.

The Federal Bureau of Investigation investigates allegations of criminal copyright infringement.

CAPCOM® COIN-OP, INC.
3311 N. Kennicott Avenue
Arlington Heights, Illinois 60004
Phone: (847) 797-6100
Fax: (847) 797-6306

Copyright © 1996 CAPCOM ® COIN-OP, INC., All Rights Reserved