Optional Kits available through your Distributor:

Flipper Rebuild Kit (Left) 500-6307-10

Flipper Base Plate Kit (Left) 515-6617-01

Kit includes: *Flipper Base Plate (Left) pre-threaded with securing hardware; see the Flipper Drawing for view.*

Flipper Rebuild Kit (Right) 500-6307-00

Flipper Base Plate Kit (Right) 515-6617-00

Kit includes: *Flipper Base Plate (Left) pre-threaded with securing hardware; see the Flipper Drawing for view.*

Pinball Location Maintenance Standard Kit (for X-MEN LE Pinball) 502-6002-D2

Standard Kit includes : *8 oz. Novus Wax #2 Fine (Red) (**675-0003-01**), Cloth, Rubber Rings (used above playfield), Bulbs (Bulb quantities vary and is limited to 25 per type), Fuses (1/per type) and 4 Pinballs.* ***Note:*** *Quanties, sizes and contents subject to change without notice.*

Pinball Location Maintenance Deluxe Kit (for X-MEN LE Pinball) 502-6003-D2

Deluxe Kit includes : *Pinball Location Maintenance Standard Kit as described above plus a quantity of Flipper Rebuild Kits.* ***Note:*** *Quantity varies which equals the same quantity of flippers used in this game.*

▲ THIS GAME KIT INCLUDES (2) FLIPPER REBUILD KITS ▲

Plastics*Kit (for X-MEN LE Pinball) 803-5000-D2

Plastics Kit includes: *Plastic Sets (830-6161-XX)*

Decals*Kit (for X-MEN LE Pinball) 802-5000-D2

Decals Kit includes: *Decal Set (820-6901-XX),(820-6912-XX),(820-6913-XX),(820-6914-XX)*

Attention: *No individual Plastic or Decal can be ordered separately, unless noted otherwise. Plastics & Decals are subject to change without notice during and / or after production. Key Fobs subject to availability and may or may not be included in the plastic set. All designs, shapes & pieces used subject to change without notice. Kit contents subject to change. Service Bulletin(s) will announce any critical changes, if warranted. The last 2-digits shown on plastics or decals are for reference only.*

Ball Shooter (Plunger) Assembly, 500-6146-00-04 (Items 1-6)

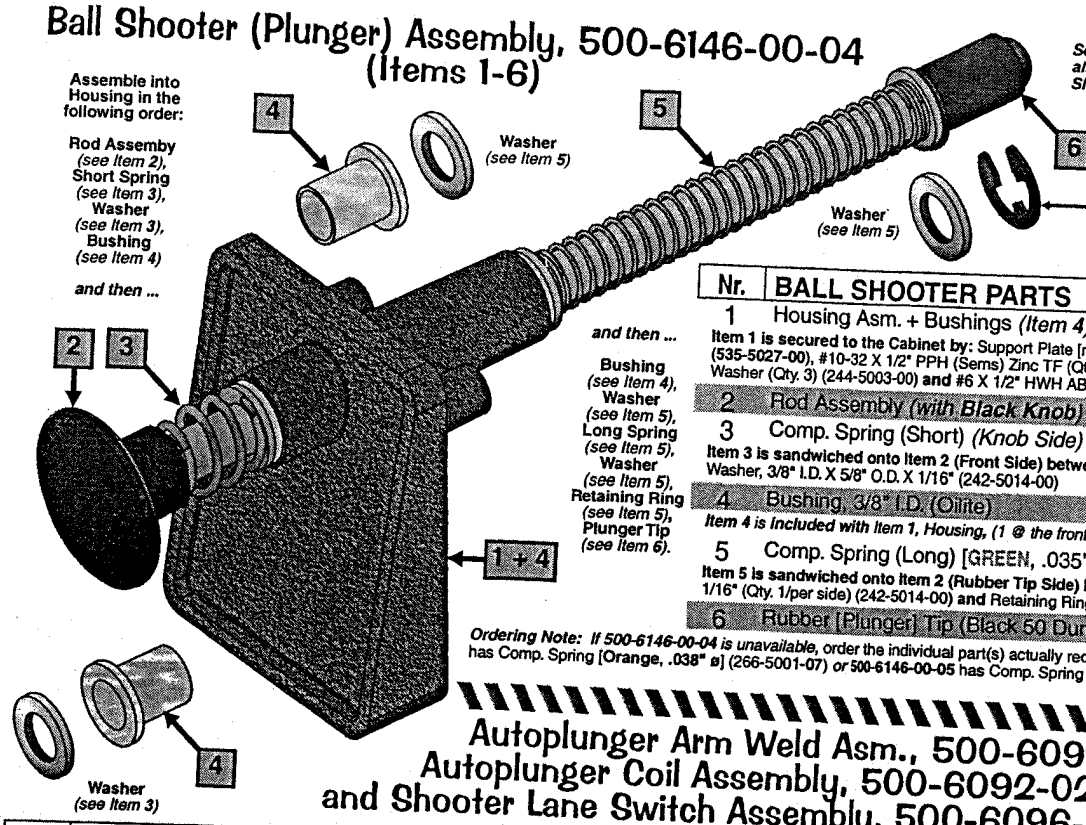

Nr.	BALL SHOOTER PARTS	QTY.	SPI PART Nr.
1	Housing Asm. + Bushings *(Item 4)*	1	535-5067-02
	Item 1 is secured to the Cabinet by: Support Plate [not included with Item 1 *or* Assembly] (535-5027-00), #10-32 X 1/2" PPH (Sems) Zinc TF (Qty. 3) (237-6033-00), #10 Split Lock Washer (Qty. 3) (244-5003-00) **and** #6 X 1/2" HWH AB (Zinc) Red (Qty. 2) (234-5001-02)		
2	Rod Assembly *(with Black Knob)*	1	515-6557-00
3	Comp. Spring (Short) *(Knob Side)*	1	266-5010-00
	Item 3 is sandwiched onto Item 2 (Front Side) between the knob and by: Washer, 3/8" I.D. X 5/8" O.D. X 1/16" (242-5014-00)		
4	Bushing, 3/8" I.D. (Oilite)	2	280-5010-00
	Item 4 is included with Item 1, Housing, (1 @ the front; 1 @ the back) as shown.		
5	Comp. Spring (Long) [GREEN, .035" ø]	1	266-5001-04
	Item 5 is sandwiched onto Item 2 (Rubber Tip Side) by: Washer, 3/8" I.D. X 5/8" O.D. X 1/16" (Qty. 1/per side) (242-5014-00) **and** Retaining Ring, 3/8" ø Shaft (270-5012-00)		
6	Rubber [Plunger] Tip (Black 50 Duro)	1	545-5276-00

Ordering Note: *If* **500-6146-00-04** *is unavailable,* order the individual part(s) actually required. ... Identical to **500-6146-00-07** has Comp. Spring **[Orange, .038" ø]** (266-5001-07) *or* **500-6146-00-05** has Comp. Spring **[Blue, .031" ø]** (266-5001-05).

Autoplunger Arm Weld Asm., 500-6091-00 (Items 1-5), Autoplunger Coil Assembly, 500-6092-02-ND (Items 6-9) and Shooter Lane Switch Assembly, 500-6096-00 (Items 10-12)

Nr.	AUTOPL. ARM WELD PARTS	QTY.	SPI PART Nr.
1	Arm Weld Assembly	1	515-6526-00
	Item 1 is secured to Item 2 by: Retaining Ring, 1/4" ø Shaft (Qty. 1) (270-5002-00)		
2	Autoplunger Fulcrum	1	535-7697-00
3	Nyliner, 1/4" (Thomson #4I1-FF)	2	545-5423-00
4	Plunger & Link Assembly	0	511-5183-00
	Item 4 is secured to Item 1 by: Retaining Ring, 1/4" ø Shaft (Qty. 1) (270-5002-00) ***For Individual Items use :*** Plunger 1.81" Lg. (530-5025-05), Plunger Link (545-5293-00) **and** Roll Pin 1/8" ø x 5/8" Lg. (251-5008-00)		
5	Compression (Return) Spring	1	266-5020-00
	(ASM. REF. 500-6091-00, Items 1-5)		

Nr.	AUTOPLNGR. COIL PARTS	QTY.	SPI PART Nr.
6	Autoplunger Coil Bracket Assembly	1	515-6527-00
	Items 1 & 6 are secured below the P/F by: #8 X 1/2" SHWH AB (Zc.) (Qty. 9) (234-5101-00)		
7	Coil Retainer Bracket	1	535-5203-03
	Item 7 is secured to Item 6 by: #8-32 X 1/4" PPH MS (Sems) Zinc (Qty. 2) (232-5300-00)		
8	Coil, 24-940 [NO DIODE]	1	090-5036-ND
	COIL DOES NOT REQUIRE A DIODE. SEE ⥁ COIL NOTE BELOW FOR DETAILS.		
9	Coil Sleeve	1	545-5031-00
	(ASM. REF. 500-6092-02-ND, Items 6-9)		

Nr.	SWITCH PARTS	QTY.	SPI PART Nr.
10	Switch *(for Shooter Lane)*	1	180-5157-00
	Switch has a Diode (1N4004) (112-5003-00). *Can be replaced with (1N4001) (112-5001-00).*		
11	Switch Mounting Bracket	1	535-6173-00
	Item 11 is secured to Playfield by: #6 X 1/2" SLT HWH AB (Zinc) (Qty. 2) (234-5001-02)		
12	Switch Body Protect Plate	14	535-6539-00
	Item 12 is secured to Items 10-11 by: #2-56 X 1/2" Unslotted Ser. HWH #4 Head TR3 Black (Qty. 2) (237-5937-02) **and** #2-56 Hex Nut (Qty. 2) (240-5301-0)		
	(ASM. REF. 500-6096-00, Items 10-12)		

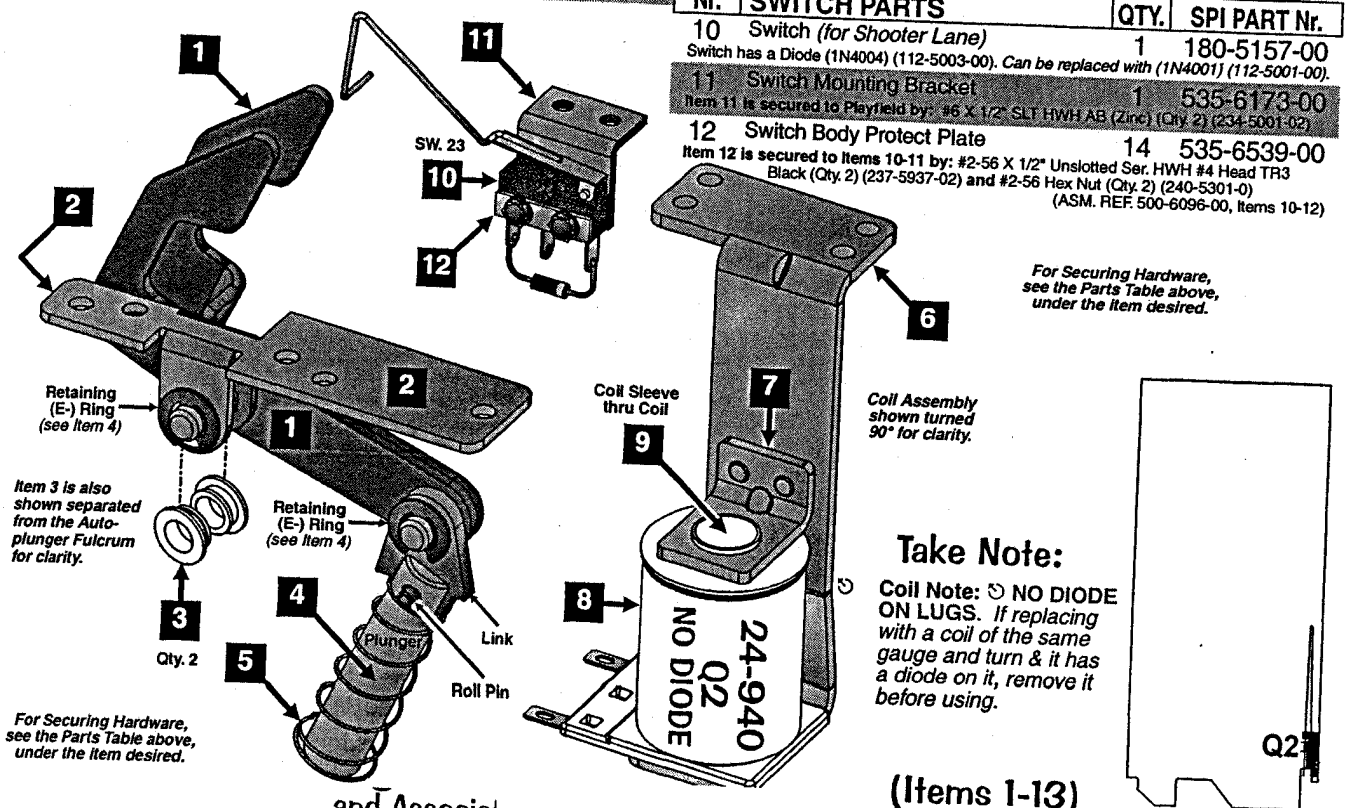

Take Note:

Coil Note: ⥁ NO DIODE ON LUGS. *If replacing with a coil of the same gauge and turn & it has a diode on it, remove it before using.*

and Associat (Items 1-13) Table Below.

Assemblies & Ramps

4-Ball Trough Assembly, 500-6318-24-ND (Items 1-13) and Associated Parts: See Parts Table Below.

Ordering Note: Identical to 500-6318-14 with exceptions, see note below Item 13 (Parts Table).

Nr.	4-BALL TROUGH PARTS	QTY.	SPI PART Nr.
1	Ball Trough Outhole Mounting Bracket Item 1 is secured below the playfield by: #8 X 1/2" SHWH AB (Zc) (Qty. 4) (234-5101-00)	1	515-6580-01
2	Coil Mounting Bracket Item 2 is secured to Item 1 by: #8-32 X 3/8" HWH Swage (Sr.) Zinc (Qty. 4) (237-5975-00)	1	535-7330-01
3	Coil Retaining Bracket Item 3 is secured to Item 2 by: #8-32 X 1/4" SHWH (Ser) Zinc (Qty. 2) (237-5975-04)	1	535-5203-03
4	Coil, 26-1200 [NO DIODE] COIL DOES NOT REQUIRE A DIODE. SEE ↻ COIL NOTE BELOW FOR DETAILS.	1	090-5044-ND
5	Coil Sleeve (Short) (Formost #10-7077)	1	545-5076-01
6	Steel & Nylon Plunger Asm. (3.57")	1	515-7309-01
7	Compression (Return) Spring	1	266-5020-00
8	Rubber Bumper (Grommet)	1	545-5105-00
9	Micro Switch (Roller Actuator, Lite-Force) Item 9 requires: Heat Shrink Tubing 1/8" ø PUI-24 (Qty. 1"/per) (605-5006-00). Switch has a Diode (1N4004) (112-5003-00). *Can be replaced with (1N4001) (112-5001-00).*	3	180-5119-02
10	Switch Body Protect Plate	3	535-6539-00
11	Trough Ball Guide Plate Item 11 is secured to Item 1 by: 1/4" X 5/16" X .144" I.D. Spacer Tap (Qty. 1) (254-5014-03) and #2-56 X 1/2" HWH (Ser) UNS #4HD TR3 BO (Qty. 4) (237-5937-02)	1	535-7801-00
12	Dual OPTO TRANS Board Assembly	1	515-0173-00
13	Dual OPTO REC Board Assembly Items 12 & 13 are secured by: #6-32 X 5/8" HWH Swg (Ser) Zc (Qty. 3/per) (237-5976-04). *For individual items use:* Dual OPTO Transmitter Board (Qty. 1) (520-5173-00), Dual OPTO Receiver Board (Qty. 1) (520-5174-00), OPTO PCB Tube Spacer (Brass) (Qty. 3/per) (530-5308-02) and OPTO PCB Rubber Grommet (Qty. 3/per) (545-5518-00)	1	515-0174-00

***Ordering Note:** If 500-6318-24-ND is unavailable, order the individual part(s) actually required. This assembly is identical to 500-6318-14-ND, -15 or -25 except for the quantity of Items 9 & 10 (Qty. 4/per on 5-Ball Trough) and Item 11, required when a Magnet Mech. is used in the game. -ND means no diode on Item 4, Coil, 26-1200.*

ASSOCIATED PARTS ARE NOT INCLUDED WITH THE ABOVE ASSEMBLY

Nr.	ASSOCIATED PART(S)	QTY.	SPI PART Nr.
AP-A	Ball Trough Enter / Exit Scoop Item AP-A secured to the playfield by: #8 X 1/2" SHWH AB (Zinc) (Qty. 4) (234-5101-00).	1	535-7329-01
AP-B	Steel Balls (1-1/16" ø)	4	260-5000-00

Take Special Note:

Item **AP-A**, Ball Trough Enter / Exit Scoop, **535-7329-01** *(not included with the 5-Ball Trough Assembly)*, is shown floating above and rotated slightly for clarity.

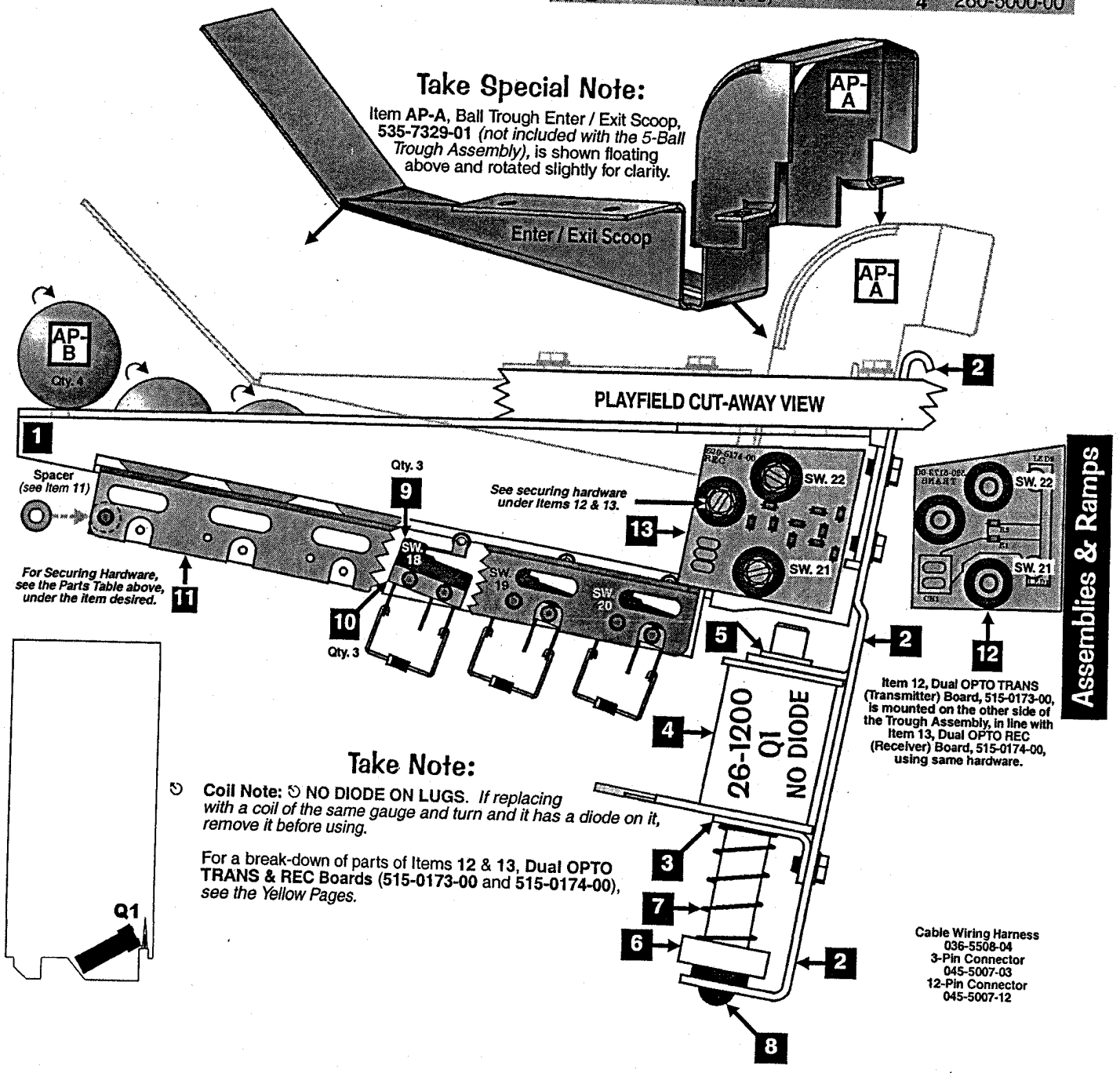

Item 12, Dual OPTO TRANS (Transmitter) Board, 515-0173-00, is mounted on the other side of the Trough Assembly, in line with Item 13, Dual OPTO REC (Receiver) Board, 515-0174-00, using same hardware.

Take Note:

↻ **Coil Note:** ↻ **NO DIODE ON LUGS.** *If replacing with a coil of the same gauge and turn and it has a diode on it, remove it before using.*

For a break-down of parts of Items **12** & **13**, **Dual OPTO TRANS & REC Boards (515-0173-00** and **515-0174-00)**, *see the Yellow Pages.*

Cable Wiring Harness
036-5508-04
3-Pin Connector
045-5007-03
12-Pin Connector
045-5007-12

Flipper (Left) Assembly, 500-6543-12-ND (Items 1-15)
and Associated Parts: YELLOW Flipper Bat & Shaft Asm., 515-5133-06-06 (Items AP-A / AP-B)

Nr.	FLIPPER (LEFT) PARTS	QTY.	SPI PART Nr.
1	Flipper Base Plate (**LEFT**)	1	*See **FRP1***
	Item 1 is secured below by: #8 X 1/2" SHWH AB (Zinc) (Qty. 8) (234-5101-00)		
	Ordering Note : Individual Part (535-7275-01) is not prethreaded, see Item FRP1.		
2	Flipper Bat Bushing (White Plastic) .25" ø I.D.	1	545-5070-00
	Item 2 is secured to Item 1 by: #6-32 X 3/8" HWH Swage (Ser.) Zc. (Qty. 3) (237-5976-02)		
3	Power (EOS / End-of-Stroke) Switch	1	180-5149-00
	Item 3 is secured to Item 1 by: #6-32 X 5/8" HWH Swage (Ser.) Zc. (Qty. 2) (237-5976-04)		
4	Sw. Plate/Spring Return Brkt. (LEFT)	1	535-7354-01
5	Flipper Return Spring	1	265-5035-00
6	Coil Stop Bracket Sub-Assembly	1	515-6308-01
	Item 6 is secured to Item 1 by: #10-32 X 3/8" SHWH Swage (Serr) Zinc (Qty. 2) (237-5985-00) **and** #10 Split Lock Washer (Qty. 2) (244-5003-00)		
7	Spring Washer (17/32" ID X 3/4" X 1")	1	269-5002-00
8	Coil Support Bracket	1	535-7356-00
	Item 8 is secured to Item 1 by: #8-32 X 3/8" HWH Swage (Ser.) Zc. (Qty. 2) (237-5975-00)		
9	Coil, 22-1080 [NO DIODE] YEL-GRN	1	090-5032-ND
	COIL DOES NOT REQUIRE A DIODE. SEE ↻ COIL NOTE BELOW FOR DETAILS.		
10	Coil Sleeve	1	545-5388-00
11	Deflector Pad (Bumper)	1	545-5428-00
12	Flipper Plunger & Link Sub-Assy	1	515-6304-03
	For Individual Items use : Flipper Plunger (530-5349-01) and Plunger "Flipper" Link (545-5611-01) **and is secured to the Plunger by:** Bushing, .16" ø ID X .281" ø OD X .187" (Qty. 1) (530-5532-00) **and** Spiral Pin ø 5/32" X 3/4" Lg. (Qty. 1) (251-5015-02)		
13	Crank Bar (Pawl)	1	530-5070-02
	Item 13 requires: Bushing, .192" ø ID X .312" ø OD X .195" (Qty. 1) (530-5139-00)		
14®	Switch Actuator (LEFT) Sub-Assy	1	515-7257-01
	For Individual Items use : Actuator & Spring Bracket (LEFT) (535-9038-01) **and** ® Switch Actuator (White Plastic) (545-5612-00) **and is secured to the Bracket by:** Rivet, 1/8" ø X 1/4" Lg. (Qty. 1) (249-5003-00)		
15	Set Screw: #10-32 X 3/4" Socket Hd.	2	237-6144-00
	Item 15 requires: #10-32 Nylon Stop Nut (Qty. 1) ***Flipper Link Side Only*** (240-5203-00) **and** #10 Split Lock Washer (Qty. 1) ***Switch Actuator Side Only*** (244-5003-00)		
	Tool required for Item 15: **5/32"** *or* **4mm Allen Wrench**		

Flipper Rebuild Parts for Easier Installation, $ave $:

FRP 1 **FLIPPER BASE PLATE KIT (LEFT) :** *Includes Item **1** pre-threaded >+< Securing Hardware for Items **2, 3, 6 & 8.*** 515-6617-01

FRP 2 **PLUNGER, LINK & CRANK (LEFT STYLE) ASSEMBLY :** *Includes Items **12, 13, 14 & 15** (comes assembled).* 515-7203-01

FRP 3 **FLIPPER (LEFT) REBUILD KIT :** *Includes Items **6, 10** AND above FRP2* 500-6307-10

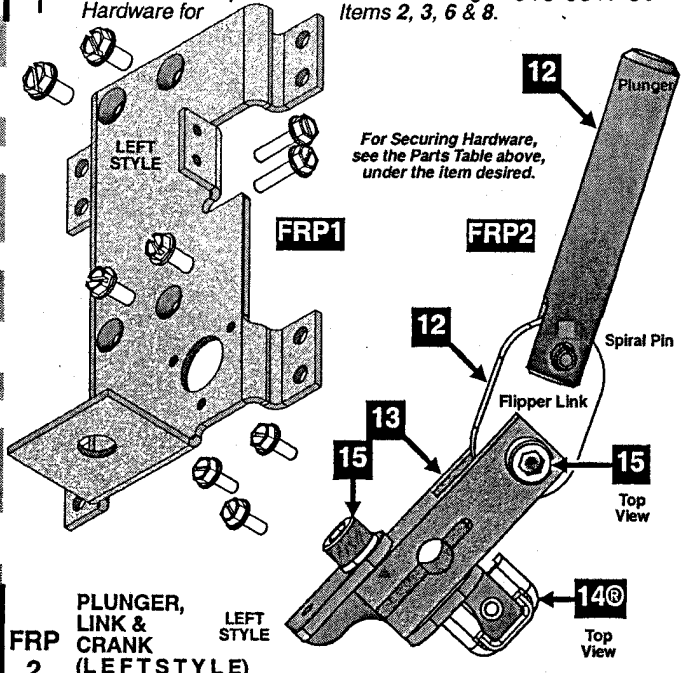

Item 14® is also shown separated from Item 13, Crank Bar, for clarity.

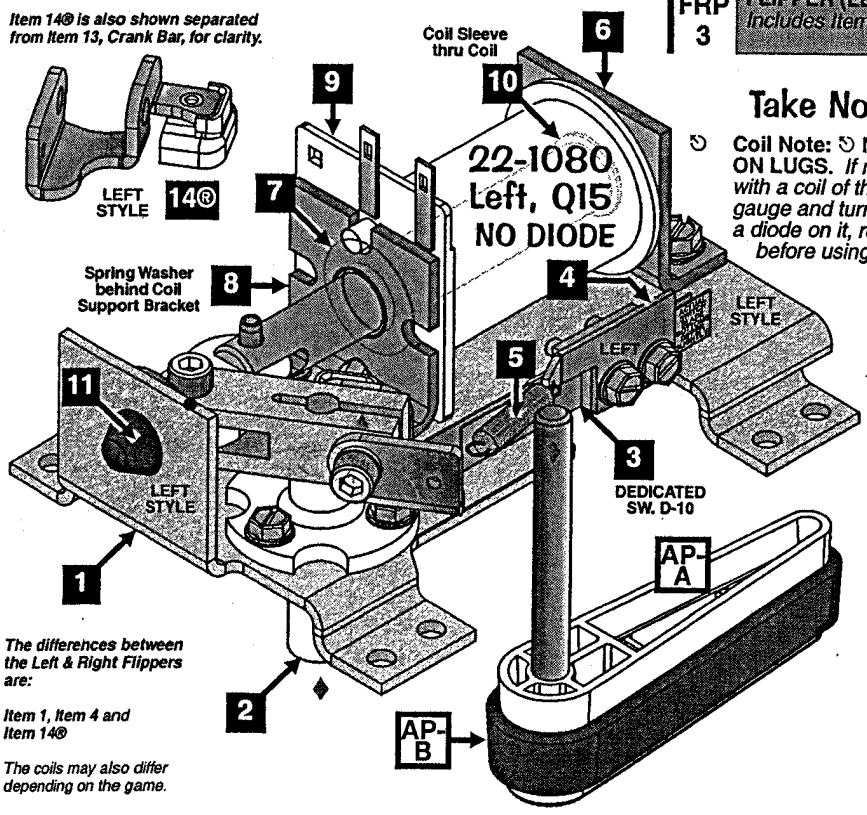

The differences between the Left & Right Flippers are:

Item 1, Item 4 and Item 14®

The coils may also differ depending on the game.

Take Note:

↻ **Coil Note:** ↻ **NO DIODE ON LUGS.** *If replacing with a coil of the same gauge and turn & it has a diode on it, remove it before using.*

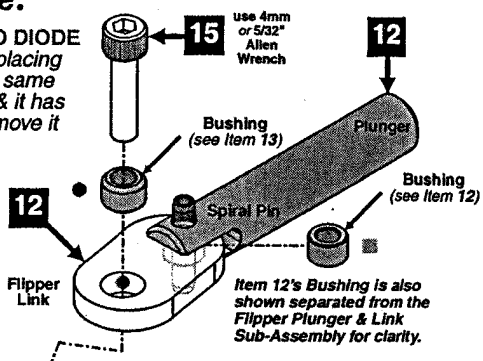

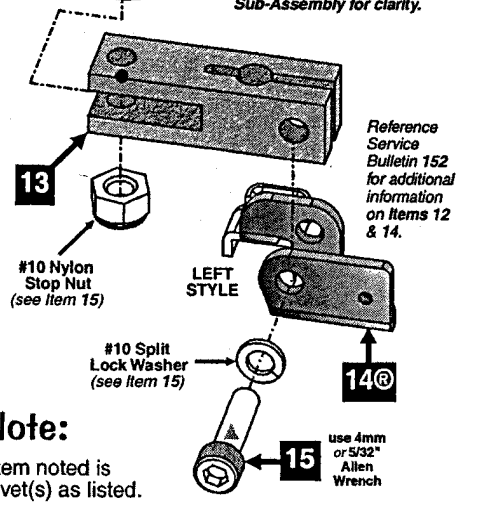

ASSOCIATED PARTS **ARE NOT INCLUDED** WITH THE ABOVE ASSEMBLY.

Nr.	ASSOCIATED PART(S)	QTY.	SPI PART Nr.
AP-A	YEL. Flipper Bat & Shaft Assembly (Non-Knurled End) *without Rubber Ring*	1	515-5133-**06**-06
AP-B	Large Flipper **BLACK** Rubber Ring	3	545-5277-00

Take Note:

® "R" indicates Item noted is secured with rivet(s) as listed.

Flipper (Right) Assembly, 500-6543-02-ND (Items 1-15)
and Associated Parts: Yellow Flipper Bat & Shaft Asm., 515-5133-06-06 (Items AP-A / AP-B)

Nr.	FLIPPER (RIGHT) PARTS	QTY.	SPI PART Nr.
1	Flipper Base Plate (RIGHT)	1	*See FRP1*
	Item 1 is secured below by: #8 X 1/2" SHWH AB (Zinc) (Qty. 8) (234-5101-00) ***Ordering Note : Individual Part (535-7275-00) is not prethreaded, see Item FRP1.***		
2	Flipper Bat Bushing (White Plastic) .25" ø I.D.	1	545-5070-00
	Item 2 is secured to Item 1 by: #6-32 X 3/8" HWH Swage (Ser.) Zc. (Qty 3) (237-5976-02)		
3	Power (EOS / End-of-Stroke) Switch	1	180-5149-00
	Item 3 is secured to Item 1 by: #6-32 X 5/8" HWH Swage (Ser.) Zc. (Qty. 2) (237-5976-04)		
4	Sw. Plate/Spring Return Brkt. (RIGHT)	1	535-7354-00
5	Flipper Return Spring	1	265-5035-00
6	Coil Stop Bracket Sub-Assembly	1	515-6308-01
	Item 6 is secured to Item 1 by: #10-32 X 3/8" SHWH Swage (Serr) Zinc (Qty 2) (237-5985-00) **and** #10 Split Lock Washer (Qty 2) (244-5003-00)		
7	Spring Washer (17/32" ID X 3/4" X 1")	1	269-5002-00
8	Coil Support Bracket	1	535-7356-00
	Item 8 is secured to Item 1 by: #8-32 X 3/8" HWH Swage (Ser.) Zc. (Qty 2) (237-5975-00)		
9	Coil, 22-1080 [NO DIODE] YEL-GRN	1	090-5032-ND
	COIL DOES NOT REQUIRE A DIODE. SEE ↻ COIL NOTE PREV. PAGE FOR DETAILS.		
10	Coil Sleeve	1	545-5388-00
11	Deflector Pad (Bumper)	1	545-5428-00
12	Flipper Plunger & Link Sub-Assy.	1	515-6304-03
	For individual items use : Flipper Plunger (530-5349-01) **and** Plunger "Flipper" Link (545-5611-01) **and is secured to the Plunger by:** Bushing, .16" ø ID X .281" ø OD X .187" (Qty. 1) (530-5532-00) **and** Spiral Pin ø 5/32" X 3/4" Lg. (Qty. 1) (251-5015-02)		
13	Crank Bar (Pawl)	1	530-5070-02
	Item 13 requires: Bushing, .192" ø ID X .312" ø OD X .195" (Qty. 1) (530-5139-00)		
14®	Switch Actuator (RIGHT) Sub-Assy.	1	515-7257-00
	For individual items use : Actuator & Spring Bracket (LEFT) (535-9038-01) **and** @ Switch Actuator (White Plastic) (545-5612-00) **and is secured to the Bracket by:** Rivet, 1/8" ø X 1/4" Lg. (Qty. 1) (249-5003-00)		
15	Set Screw: #10-32 X 3/4" Socket Hd.	2	237-6144-00
	Item 15 requires: #10-32 Nylon Stop Nut (Qty. 1) ***Flipper Link Side Only*** (240-5203-00) **and** #10 Split Lock Washer (Qty. 1) ***Switch Actuator Side Only*** (244-5003-00) ***Tool required for Item 15:*** **5/32" *or* 4mm Allen Wrench**		

Item 14® is also shown separated from Item 13, Crank Bar, for clarity.

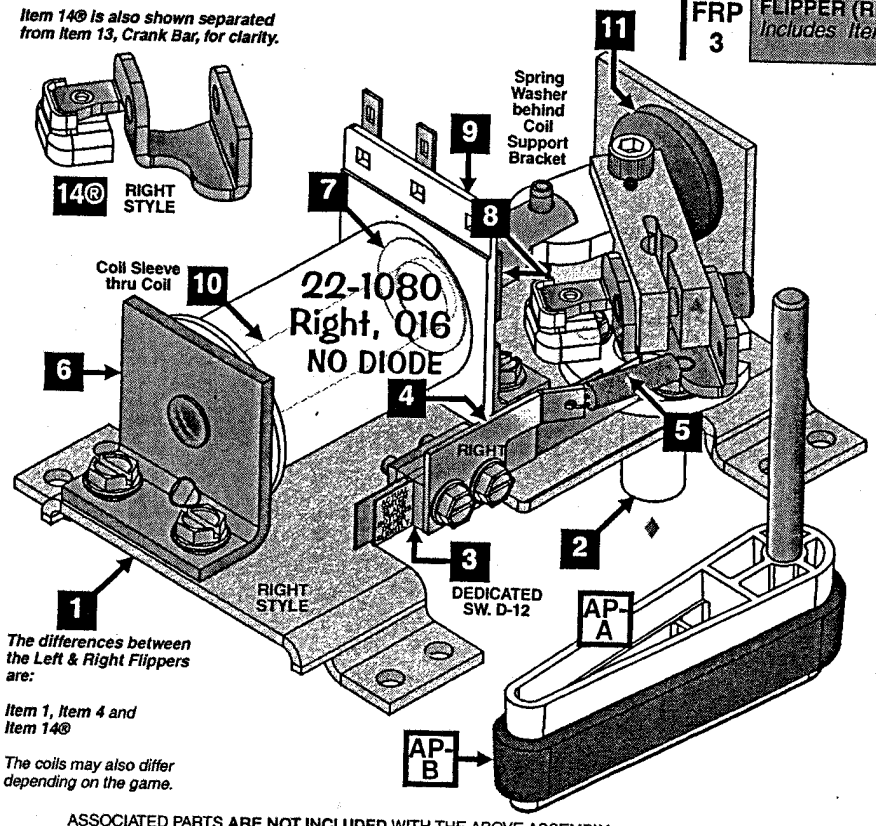

The differences between the Left & Right Flippers are:

Item 1, Item 4 and Item 14®

The coils may also differ depending on the game.

ASSOCIATED PARTS **ARE NOT INCLUDED** WITH THE ABOVE ASSEMBLY.

Nr.	ASSOCIATED PART(S)	QTY.	SPI PART Nr.
AP-A	YEL. Flipper Bat & Shaft Assembly (Non-Knurled End) ***without Rubber Ring***	1	515-5133-**06**-06
AP-B	Large Flipper **BLACK** Rubber Ring	3	545-5277-00

Flipper Rebuild Parts for Easier Installation, Save $:

FRP 1 **FLIPPER BASE PLATE KIT (R I G H T) :** *Includes Item 1 pre-threaded >+< Securing Hardware for Items 2, 3, 6 & 8.* **515-6617-00**

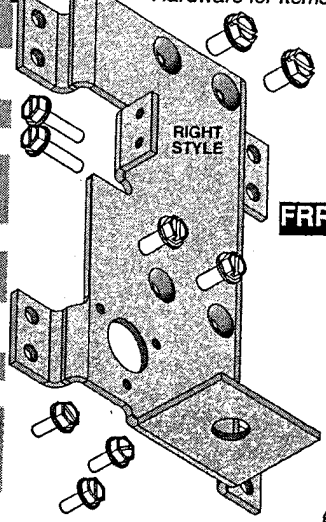

For Securing Hardware, see the Parts Table above, under the item desired.

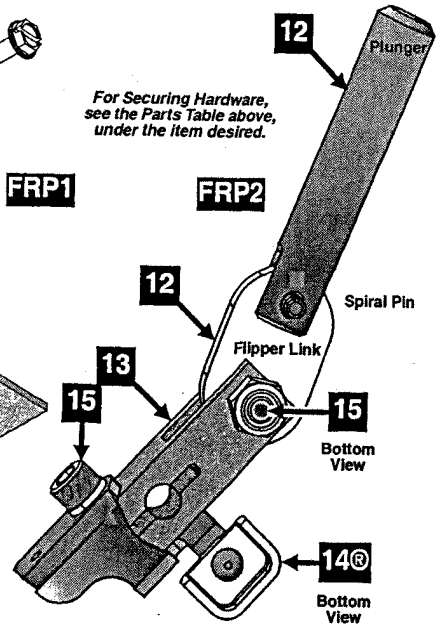

FRP 2 **PLUNGER, LINK & CRANK (R I G H T S T Y L E) ASSEMBLY :** *Includes Items 12, 13, 14 & 15 (comes assembled).* **515-7203-00**

RIGHT STYLE

FRP 3 **FLIPPER (RIGHT) R E B U I L D K I T :** *Includes Items 6, 10 AND above FRP2* **500-6307-00**

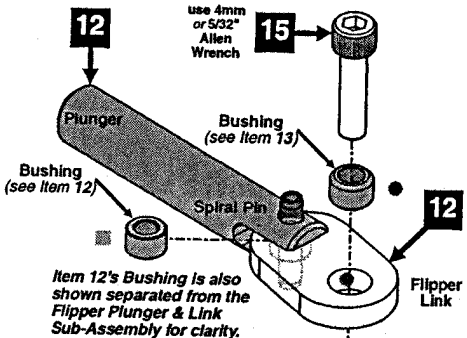

Item 12's Bushing is also shown separated from the Flipper Plunger & Link Sub-Assembly for clarity.

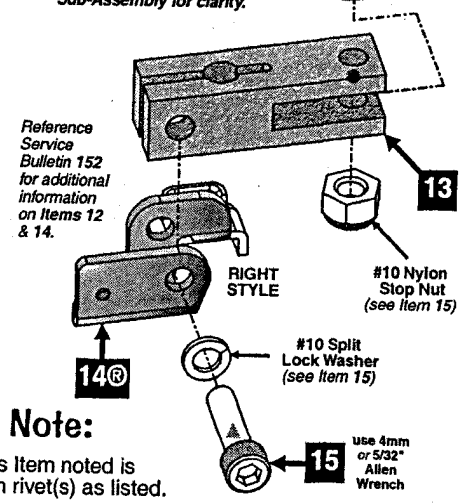

Take Note:

® "R" indicates Item noted is secured with rivet(s) as listed.

Slingshot (Left & Right) Assemblies, 500-5849-01-ND (Qty. 2) (Items 1-9)

Nr.	SLINGSHOT PARTS	QTY.	SPI PART Nr.
1	Slingshot Bracket Assembly	1/per	515-5339-01
	Item 1 is secured below the playfield by: #8 X 1/2" SHWH AB (Zc.) (Qty. 3) (234-5101-00)		
2	Coil Retaining Bracket	1/per	535-5203-03
	Item 2 is secured to Item 1 by: #8-32 X 3/8" PPH MS (Sems) (Qty. 2) (232-5301-00)		
3	Coil, 26-1200 [NO DIODE]	1/per	090-5044-ND
	COIL DOES NOT REQUIRE A DIODE. SEE ↻ COIL NOTE BELOW FOR DETAILS.		
4	Coil Sleeve	1/per	545-5031-00
5	Plunger & Link Assembly	1/per	515-5338-00
	For Individual Items use : Plunger 2" Lg. (530-5025-01), Plunger Link (545-5293-00) and Roll Pin 1/8" ø x 5/8" Lg. (251-5008-00) **The Plunger Link is secured to the Riveted Arm by:** Retaining Ring, 1/4" ø Shaft (Qty. 1) (270-5002-00)		
	Ordering Note: If 515-5338-00 is unavailable, order the individual part(s) actually required.		

Nr.	SLINGSHOT PARTS	QTY.	SPI PART Nr.
6	Compression (Return) Spring	1/per	266-5020-00
7	Slingshot Stack (Blade) Switch	2/per	180-5054-00
	Only 1 of the 2 Switches has a Diode (1N4004) (112-5003-00). *See Note Below on Drawing. Can be replaced with (1N4001) (112-5001-00).*		
8	Switch Body Protect Plate	2/per	535-5045-00
	Items 7 & 8 are secured to Item 1 by: #6-32 X 5/8" HWH Swage (Qty. 4) (237-5976-04)		
9®	Riveted Arm & Tip Assembly	1/per	515-5340-01
	For Individual Parts use (requires drilling out rivet & rereviting) : Arm (515-5341-01), Kicker Tip (545-5216-01) and Rivet, 1/8" ø x 1/4" Lg. (249-5003-00) **The Riv. Arm is secured to Item 1 by:** Retaining Ring, 1/4" ø Shaft (Qty. 1) (270-5002-00)		
	Ordering Note: If 515-5340-01 is unavailable, order the individual part(s) actually required.		

***Ordering Note:** If **500-5849-00-ND** is unavailable, order the individual part(s) actually required. This assembly is identical to **500-5849-02-ND** with the exception of **Item 3**, which uses a Coil, 27-1500 [NO DIODE] **(090-5004-ND)** instead.*

Take Note:

↻ **Coil Note:** ↻ **NO DIODE ON LUGS.** *If replacing with a coil of the same gauge and turn and it has a diode on it, remove it before using.*

® "R" indicates Item noted is secured with rivet(s) as listed.

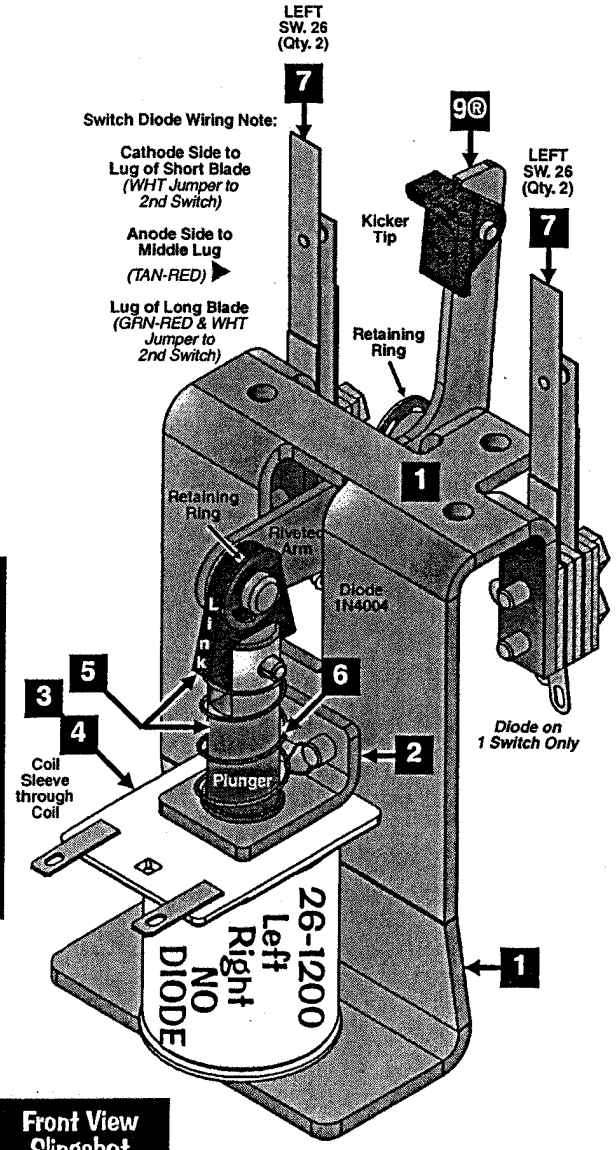

Front View Slingshot (Left)

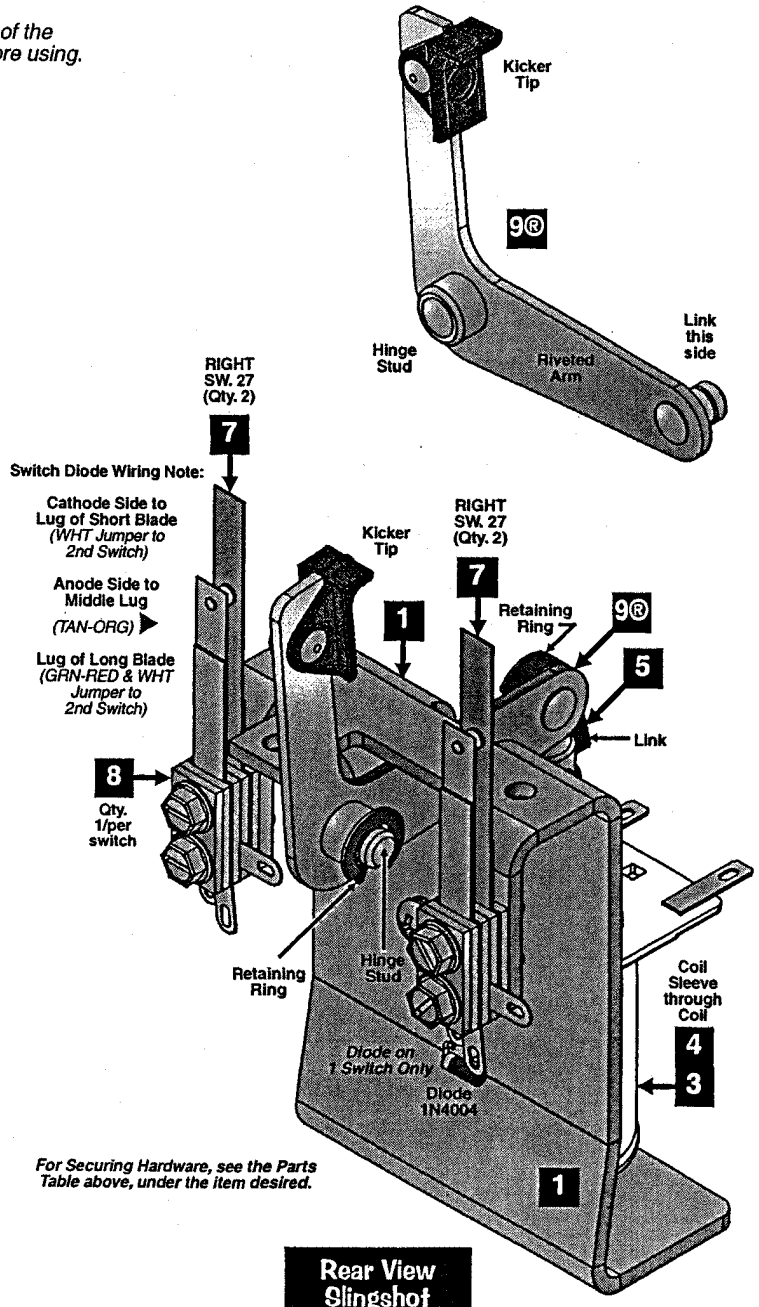

For Securing Hardware, see the Parts Table above, under the item desired.

Rear View Slingshot (Right)

Assemblies & Ramps

Left, Right & Bottom Bumper & Switch Individual Parts Only (Items 1-18)
and Associated Part: See Parts Table Below.

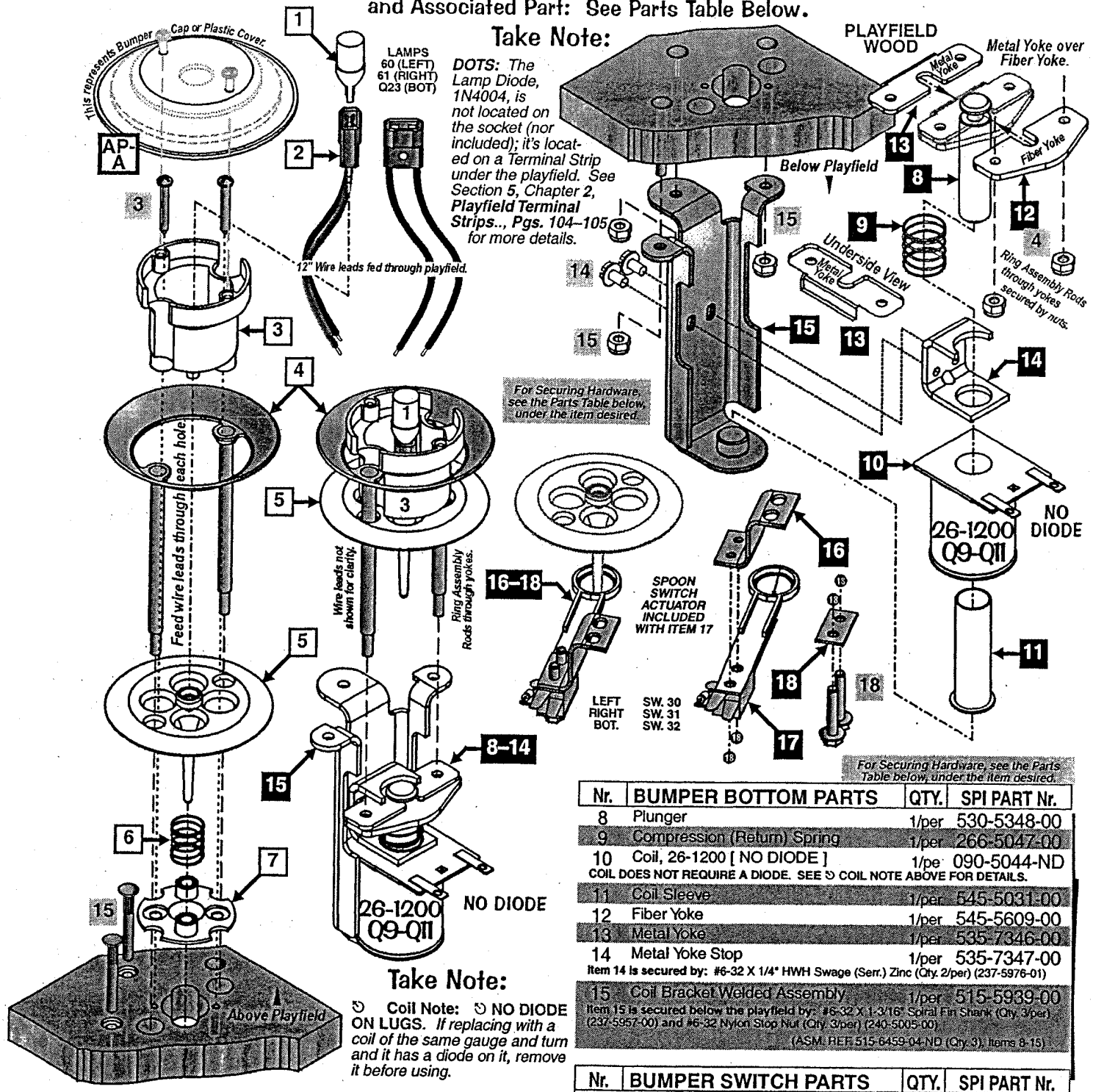

Take Note:

Coil Note: NO DIODE ON LUGS. *If replacing with a coil of the same gauge and turn and it has a diode on it, remove it before using.*

Nr.	BUMPER TOP PARTS	QTY.	SPI PART Nr.
1	LED Module (WHT) (6.3v) Wedge Base	2	112-5024-08
	#906 Wedge Base Bulb (Clear)	1	165-5004-00
2	Wedge Base Socket	3	077-5206-00
3	Bumper Body	1/per	545-5197-00
	Item 3 is secured above the P/F by: #5 X 7/8" PRH AB (Zinc) (Qty 2/per) (237-5826-00)		
4	Ring Assembly	1/per	515-5085-00
	Item 4 is secured by: #6-32 Nylon Stop Nut (Qty. 2/per) (240-5005-00)		
5	Bumper Skirt (Switch Actuator)	1/per	545-5607-00
6	Bumper Skirt Compression Spring	1/per	266-5048-00
7	Bumper Base	1/per	545-5195-00
	(ASM. REF. 515-6459-01L (Qty. 2), Items 1-7; 515-6459-01-FL (Qty. 1), Items 1 Diff.)		

The Top & Bottom Assemblies are secured together by hardware noted in Item 4.

Nr.	BUMPER BOTTOM PARTS	QTY.	SPI PART Nr.
8	Plunger	1/per	530-5348-00
9	Compression (Return) Spring	1/per	266-5047-00
10	Coil, 26-1200 [NO DIODE]	1/pe	090-5044-ND
	COIL DOES NOT REQUIRE A DIODE. SEE COIL NOTE ABOVE FOR DETAILS.		
11	Coil Sleeve	1/per	545-5031-00
12	Fiber Yoke	1/per	545-5609-00
13	Metal Yoke	1/per	535-7346-00
14	Metal Yoke Stop	1/per	535-7347-00
	Item 14 is secured by: #6-32 X 1/4" HWH Swage (Serr.) Zinc (Qty. 2/per) (237-5976-01)		
15	Coil Bracket Welded Assembly	1/per	515-5939-00
	Item 15 is secured below the playfield by: #6-32 X 1-3/16" Spiral Fin Shank (Qty. 3/per) (237-5957-00) and #6-32 Nylon Stop Nut (Qty. 3/per) (240-5005-00)		
	(ASM. REF. 515-6459-04-ND (Qty. 3), Items 8-15)		

For Securing Hardware, see the Parts Table below, under the item desired.

Nr.	BUMPER SWITCH PARTS	QTY.	SPI PART Nr.
16	Switch Bracket	1/per	535-7342-00
	Item 16 is secured by: #8 X 1/2" HWH AB (Zinc) (Qty. 2/per) (234-5101-00)		
17	Bumper Stack (Blade) Switch Assy.	1/per	180-5015-04
	Included with Item 17: Spoon Switch Actuator (545-5610-02). Switch has a Diode (1N4004) (112-5003-00). *Can be replaced with (1N4001) (112-5001-00).*		
18	Switch Body Protect Plate	1/per	535-7344-00
	Items 17 & 18 are secured by: #6-32 X 3/4" HWH Swage (Serr) Zc. (Qty. 2) (237-5976-05)		
	Can substitute Item 17 with 180-5015-05 (ASM. REF. 515-6459-09/R (Qty. 3), Items 16-18)		

ASSOCIATED PARTS **ARE NOT INCLUDED** WITH THE ABOVE ASSEMBLIES.

Nr.	ASSOCIATED PART(S)	QTY.	SPI PART Nr.
AP-A	Kit: Plastics *(incl. -09, -10 & -11)*	1	803-5000-C7
	Note: Individual Plastics (830-6072-XX, 830-6090-XX & 830-6092-24) are not available individually, ordering of kit is required.		
	Item AP-A is secured Item 3 by: #5 X 7/8" PRH AB (Zinc) (Qty 2/per) (237-5826-00)		

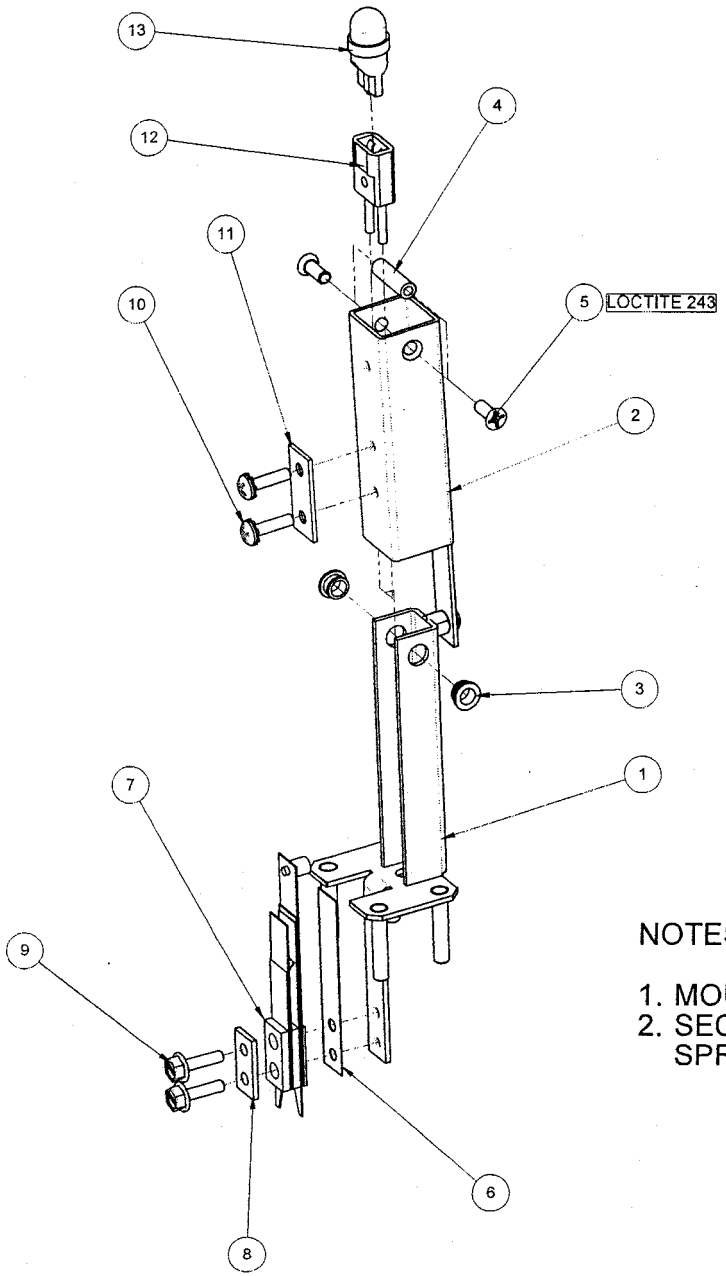

ITEM #	QTY	PART #	DESCRIPTION
1	1	515-9620-00	SUPPORT BRACKET
2	1	511-7225-00	MOUNTING TUBE ASSEMBLY
3	2	545-5352-00	NYLINER, 3/16" SHAFT
4	1	530-7805-00	PIVOT SHAFT
5	2	237-5871-00	SCREW, 6-32 X 3/8 PFH 82-DEG U/C ZINC
6	1	545-7310-00	FICHE PAPER
7	1	180-5218-00	SINGLE FLIPPER SWITCH/ w NYLON LIFTER
8	1	535-5045-00	SWITCH PLATE
9	2	237-5976-03	6-32 X 1/2" HWH MS
10	2	232-5202-00	SCREW, 6-32 X 1/2" PPH MS SEMS
11	1	535-9648-00	BUMPER HOLDER - FASTENED
12	1	077-5206-00	LAMP SOCKET - POP BUMPER
13	1	112-5033-01	DOUBLE LED, WEDGE BASE, CLEAR
NOT SHN	1	045-5004-02	2-PIN CONNECTOR
NOT SHN	1	545-7312-00	WOLVERINE - TRIMMED
NOT SHN	1	036-5583-10-D1	CABLE ASSEMBLY

NOTES:

1. MOUNT TO PLAYFIELD TOP.
2. SECURE TO PLAYFIELD BOTTOM WITH SPRING RETAINER 535-0616-00, SPRING 266-5077-00, 2X WASHER 242-5005-00 & 4X STOP NUT 240-5102-00.

WOLVERINE ASSEMBLY LE

500-7258-01

ITEM #	QTY	PART #	DESCRIPTION
1	1	515-9621-00	MOUNTING TUBE
2	1	232-5200-00	SCREW, 6-32 X 1/4" PPH SEMS
3	1	254-5008-00	HEX SPACER - 1/4 "

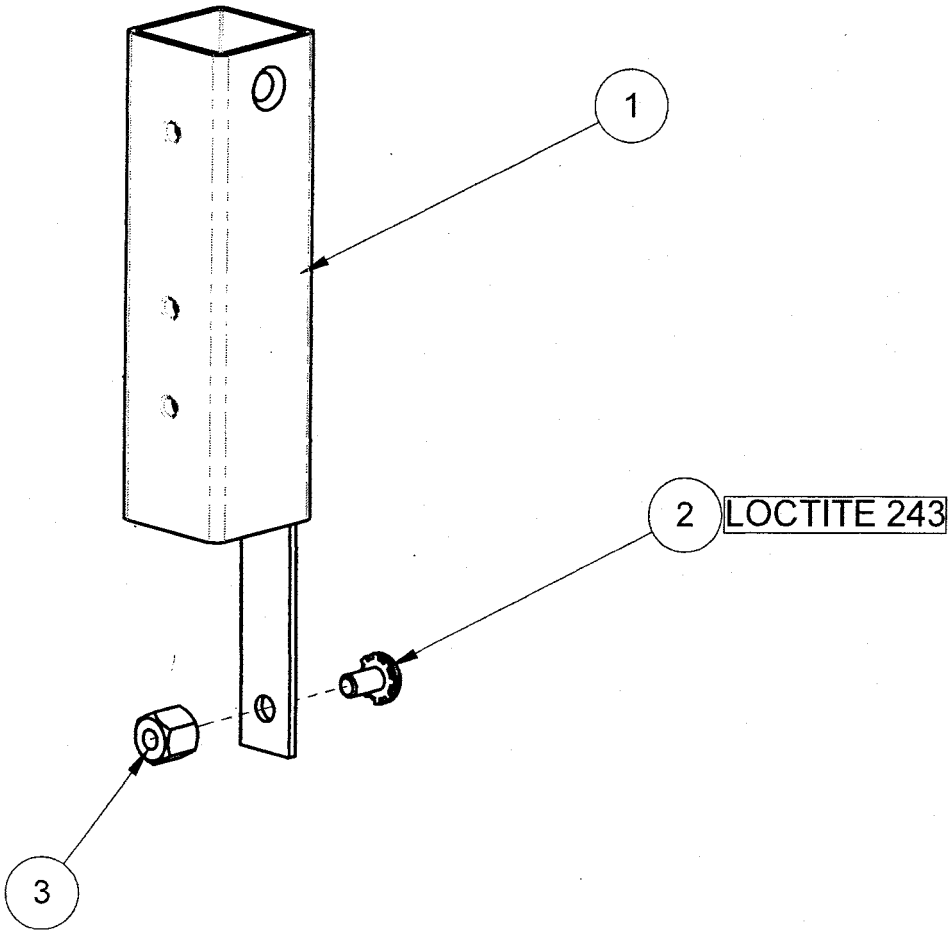

MOUNTING TUBE ASSEMBLY

511-7225-00

ITEM NO.	PART NUMBER	DESCRIPTION	QTY.
1	515-6141-03	THREADED CORE WELD ASSY	1
2	511-5065-ND	MAGNET & CONN ASSY, 22-650	1
3	530-5320-00	THREADED CORE PLUG	1
4	240-5315-00	3/4-16 HEX JAM NUT	1

MAGNET ASSEMBLY

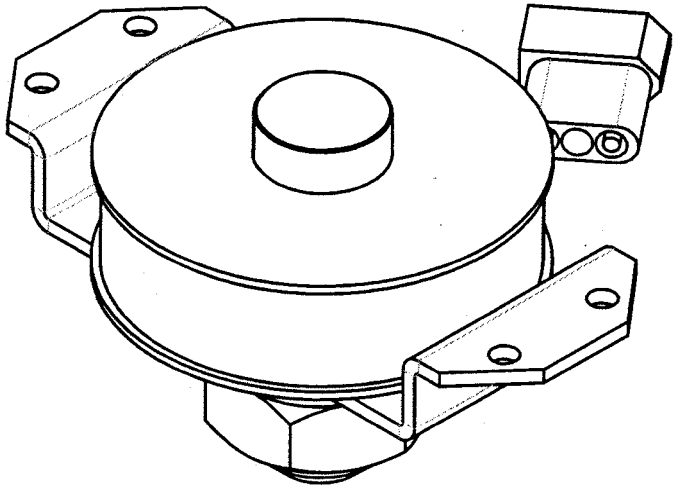

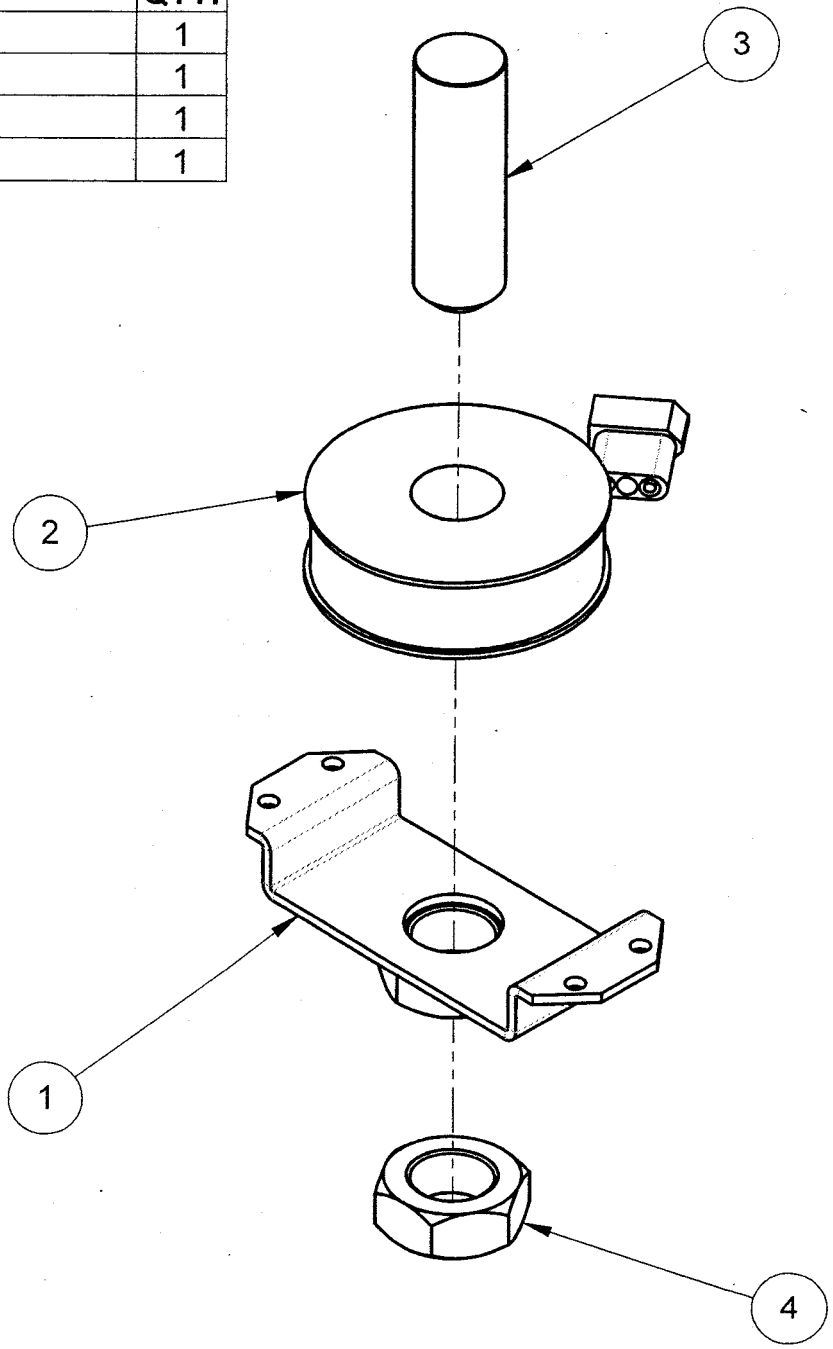

ASSEMBLY, POWER SCOOP W/ CABLE

500-5809-01

ITEM NO.	PART NUMBER	DESCRIPTION	QTY.
1	515-6022-00	POWER SCOOP WELDING ASSY	1
2	535-6173-00	MICRO-SWITCH BRACKET	1
3	232-5209-00	SCREW, 6-32 X 3/16" PPH SEMS	2
4	180-5057-00	SWITCH	1
5	535-6539-00	SWITCH BODY PROTECT PLATE	1
6	237-5806-00	SCREW, 2-56 X 1/2" PPH MS ZINC	2
7	244-5001-00	#2 SPRING LOCK WASHER	2
8	240-5301-00	2-56 HEX NUT	2
9	112-5003-00	DIODE - 1N4004	1
99*	036-5544-01	3" CABLE GENERIC SWITCH	1

* ITEM NOT SHOWN

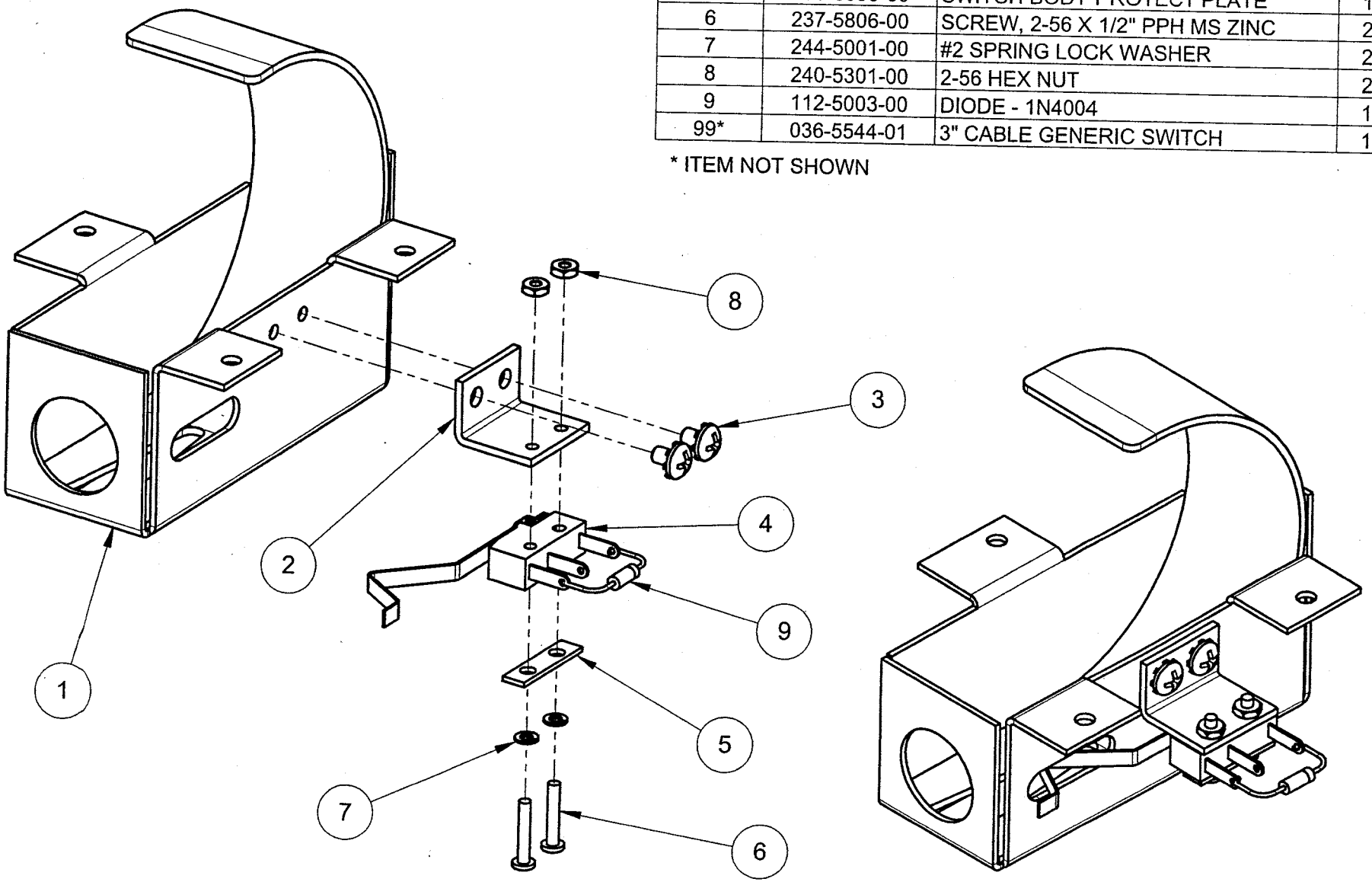

ITEM NO.	PART NUMBER	DESCRIPTION	QTY.
1	535-8575-00	KICK BIG MTG. BRKT.	1
2	090-5001-ND	COIL - 23-800, NO DIODE	1
3	545-5076-01	COIL SLEEVE	1
4	269-5002-00	SPRING WASHER	1
5	266-5020-00	COMPRESSION SPRING-CONICAL	1
6	545-5105-00	RUBBER BUMPER	1
7	515-7318-00	PLUNGER ASSEMBLY	1
8	535-5203-03	COIL RETAINING BRACKET	1
9	232-5300-00	SCREW, 8-32 X 1/4" PPH SEMS	2

ASSEMBLY, BIG KICKER

500-6398-01

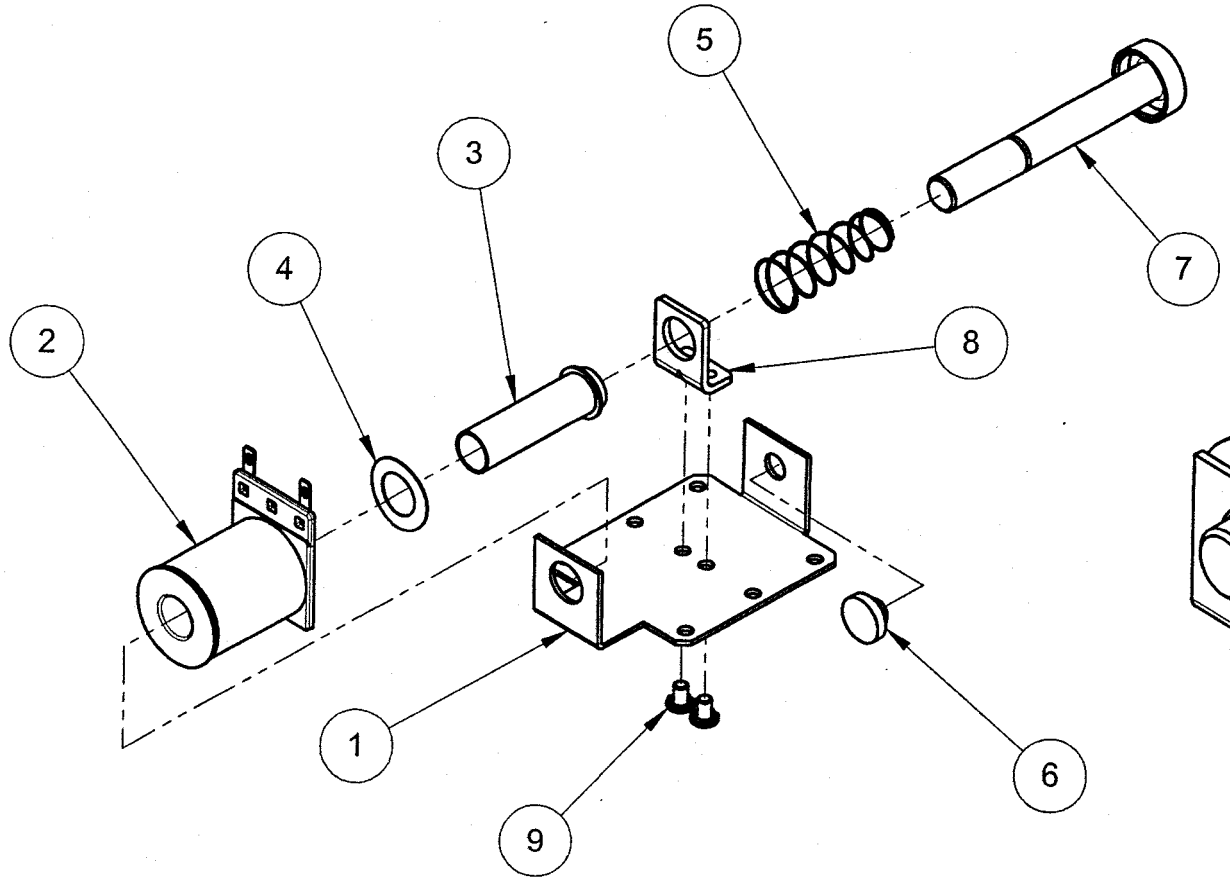

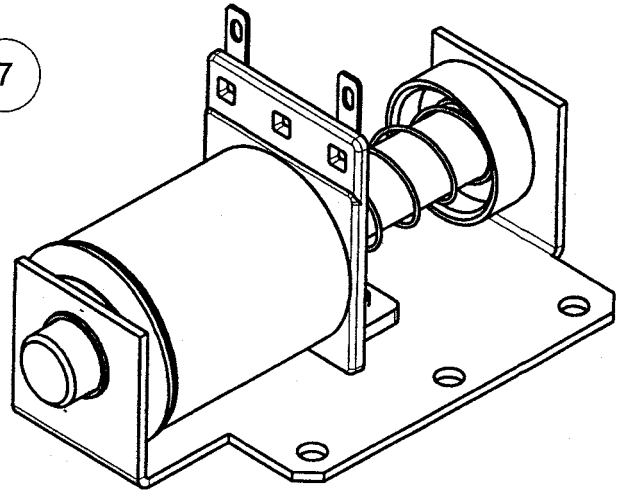

b12

ITEM NO.	PART NUMBER	DESCRIPTION	QTY.
1	535-5526-00	BRACKET, MOTOR MOUNTING	1
2	535-5524-00	BRACKET, MAGNET MOUNTING	1
3	511-5250-01	MOTOR, AC	1
4	232-5301-00	SCREW, 8-32 X 3/8" PPH SEMS	4
5	270-5002-00	RETAINING RING - 1/4"	1
6	515-9613-00	DISC / PAD ASSEMBLY	1
7	237-5897-00	SCREW, 8-32 X 3/8" SHCS ZINC	1
8	535-5525-01	MOUNTING FOOT	2
9	511-5065-ND	MAGNET / CONNECTOR ASSY, 22-650	1
10	545-5626-00	SLEEVE (MAGNETIC COIL)	1
11	232-5209-00	SCREW, 6-32 X 3/16" PPH SEMS	2
12	242-5001-00	#6 WASHER	2
13	237-5903-00	SCREW, 8-32 X 3/8" HWH	12

ASSEMBLY, MOTORIZED MAGNETIC DISC, LE
500-7234-01

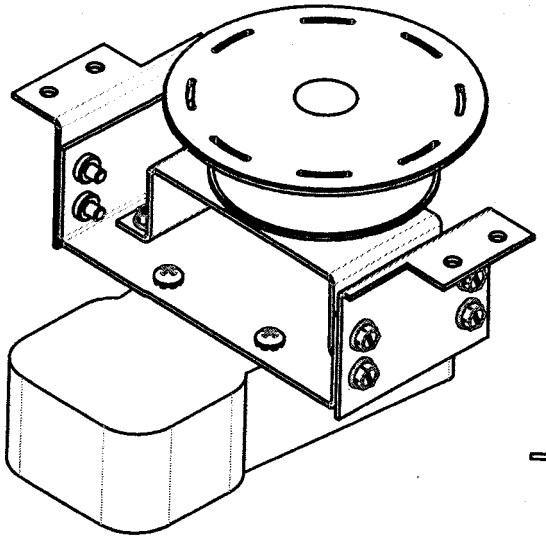

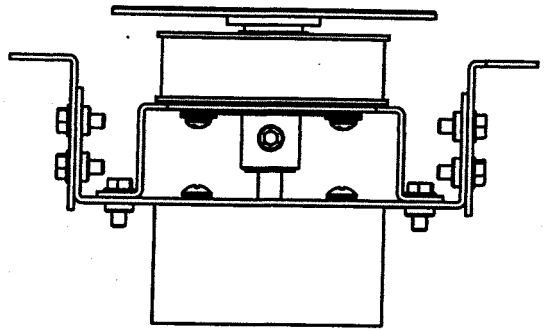

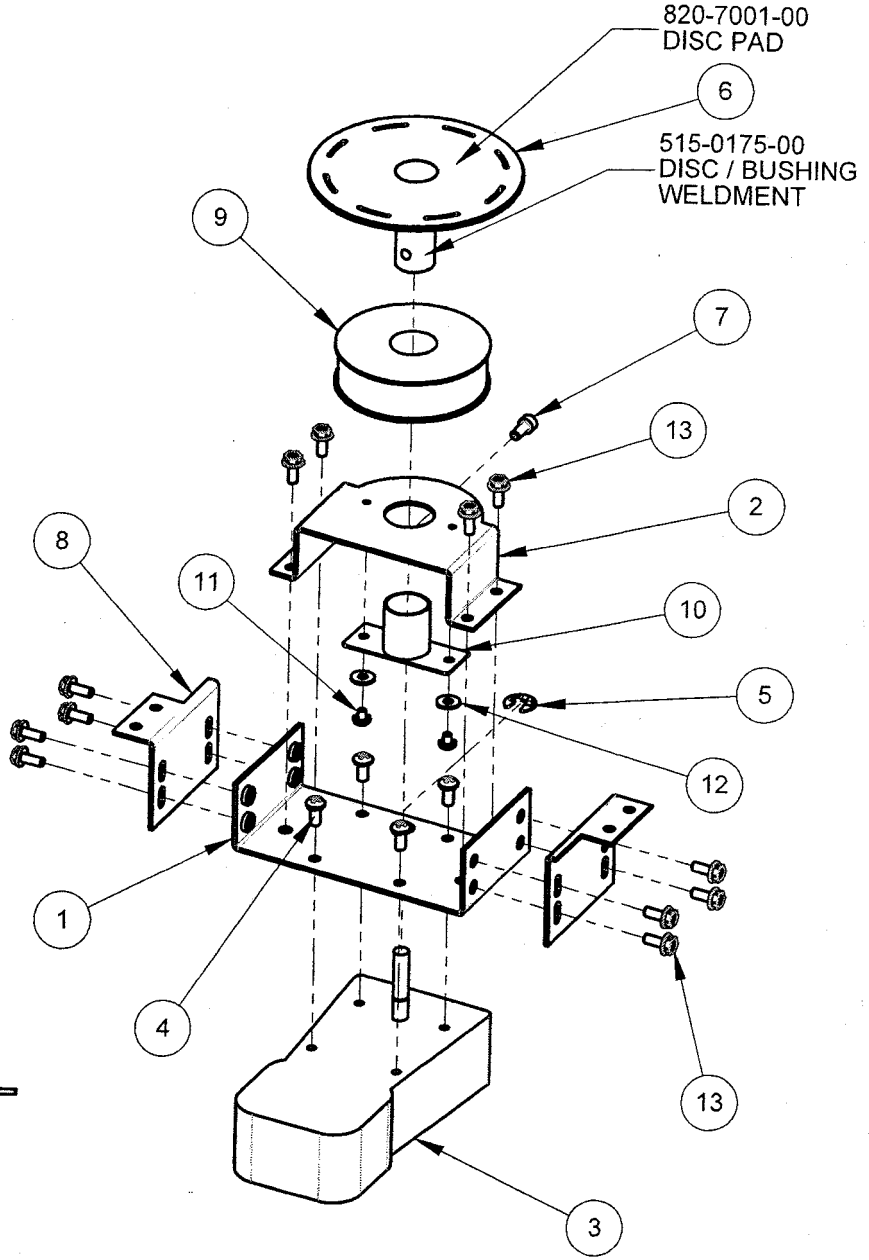

ITEM NO.	PART NUMBER	DESCRIPTION	QTY.
1	515-7734-00	WELDMENT, BALL LOCK BRACKET	1
2	545-6816-01	BEARING BLOCK - BALL LOCK	1
3	511-6769-00	ASSY, BALL LOCK PLUNGER & BARS	1
4	090-5044-ND	COIL 26-1200 - NO DIODE	1
5	545-5076-01	COIL SLEEVE	1
6	535-5203-03	COIL RETAINING BRACKET	2
7	266-5020-00	COMPRESSION SPRING-CONICAL	1
8	232-5300-00	SCREW, 8-32 X 1/4" PPH SEMS	4
9	530-5511-00	PLUNGER HEAD	1
10	237-5702-00	SCREW, 10-32 X 1/2 PPH MS	1
11	515-7595-00-ND	MINI-COIL ASSEMBLY, NO DIODE	1
12	237-5975-00	SCREW, 8-32 X 3/8 HWH SWAGE ZN	1
99*	036-5539-10-B1	CABLE, BALL LOCK MECH	1

* ITEM NOT SHOWN

ASSEMBLY, LATCHING BALL LOCK

511-6770-00

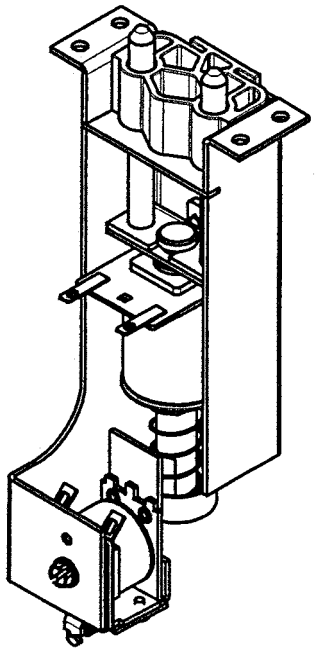

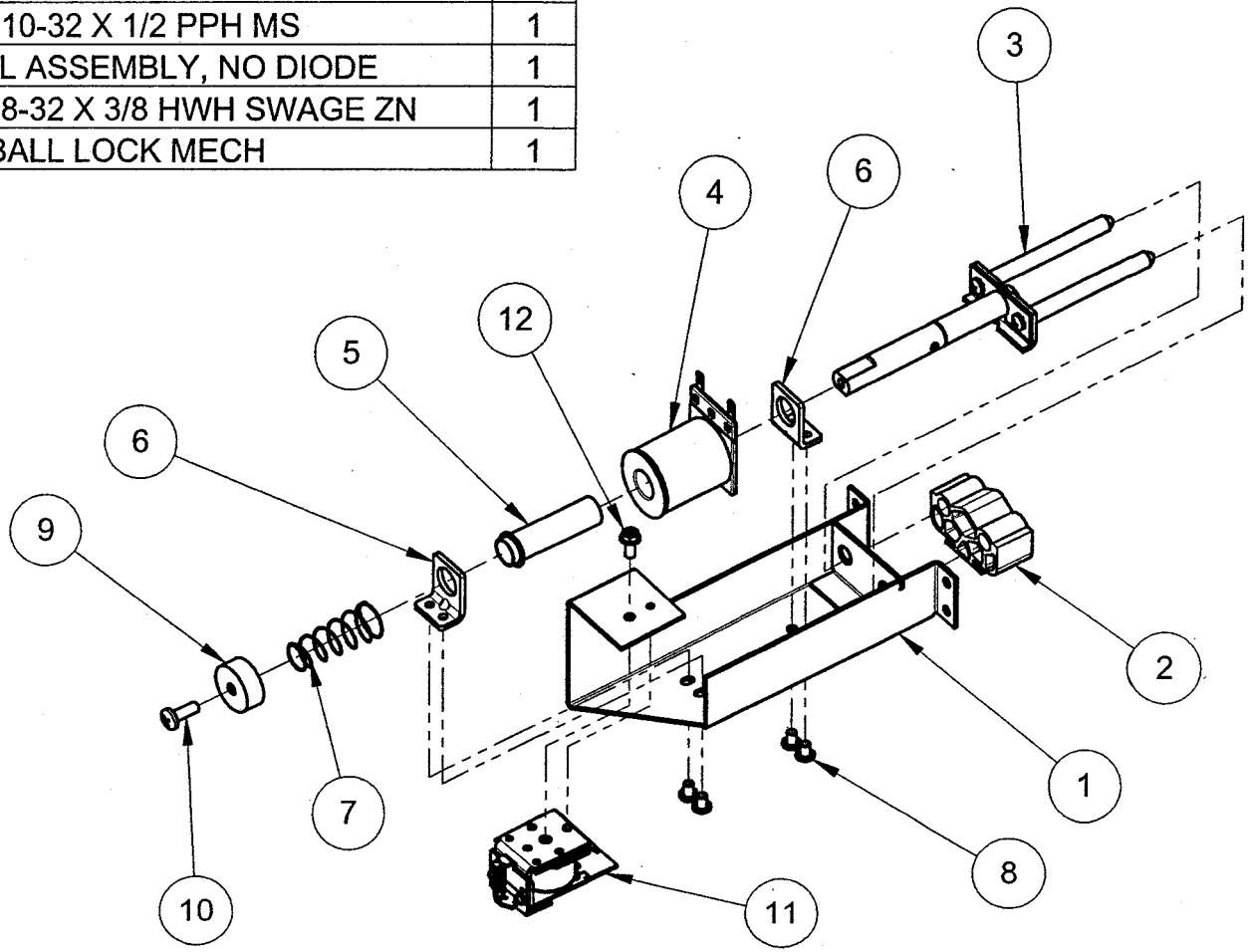

ITEM NO.	PART NUMBER	DESCRIPTION	QTY.
1	535-0604-00	NIGHTCRAWLER SWITCH BRACKET	1
2	180-5220-00	SWITCH, 5/16 STANDOFF - STANDARD LUGS	1
3	237-6172-00	6-32 x 5/8 PHILLIPS FLAT HEAD ZINC	2
4	535-5045-01	SWITCH PLATE - C'SUNK	1
5	626-5078-00	3/16" FOAM PAD	1

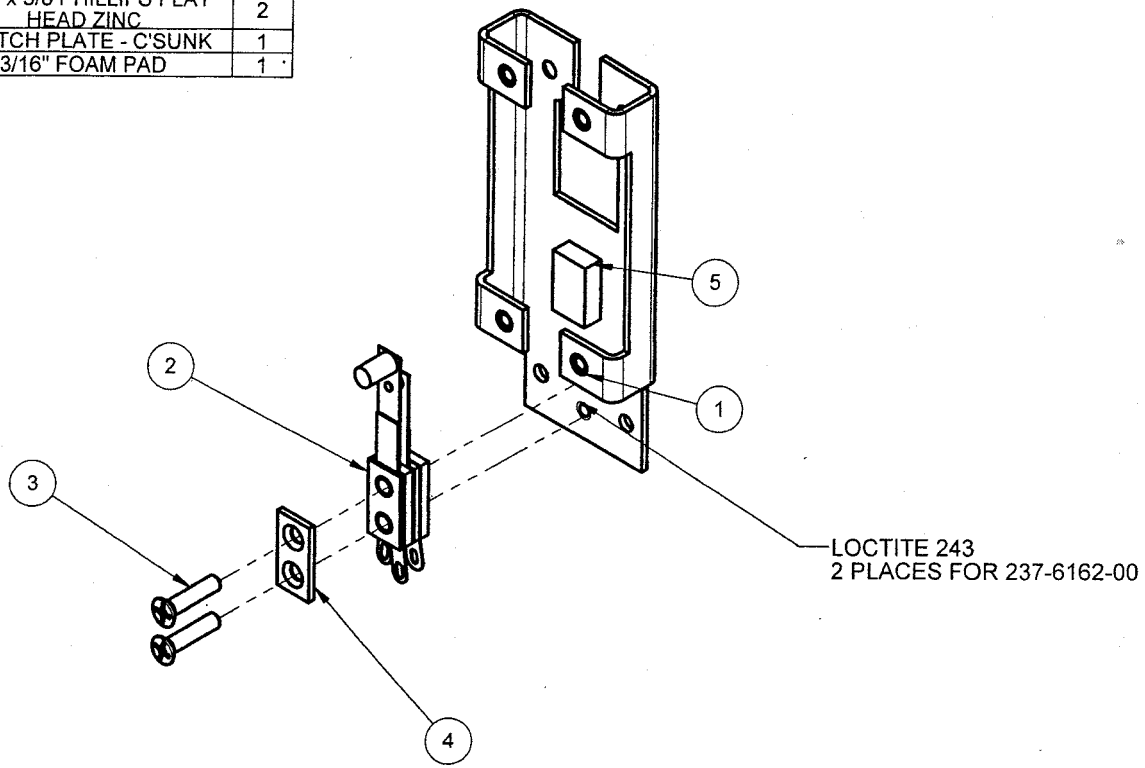

NIGHTCRAWLER SWITCH ASSEMBLY

511-7217-00

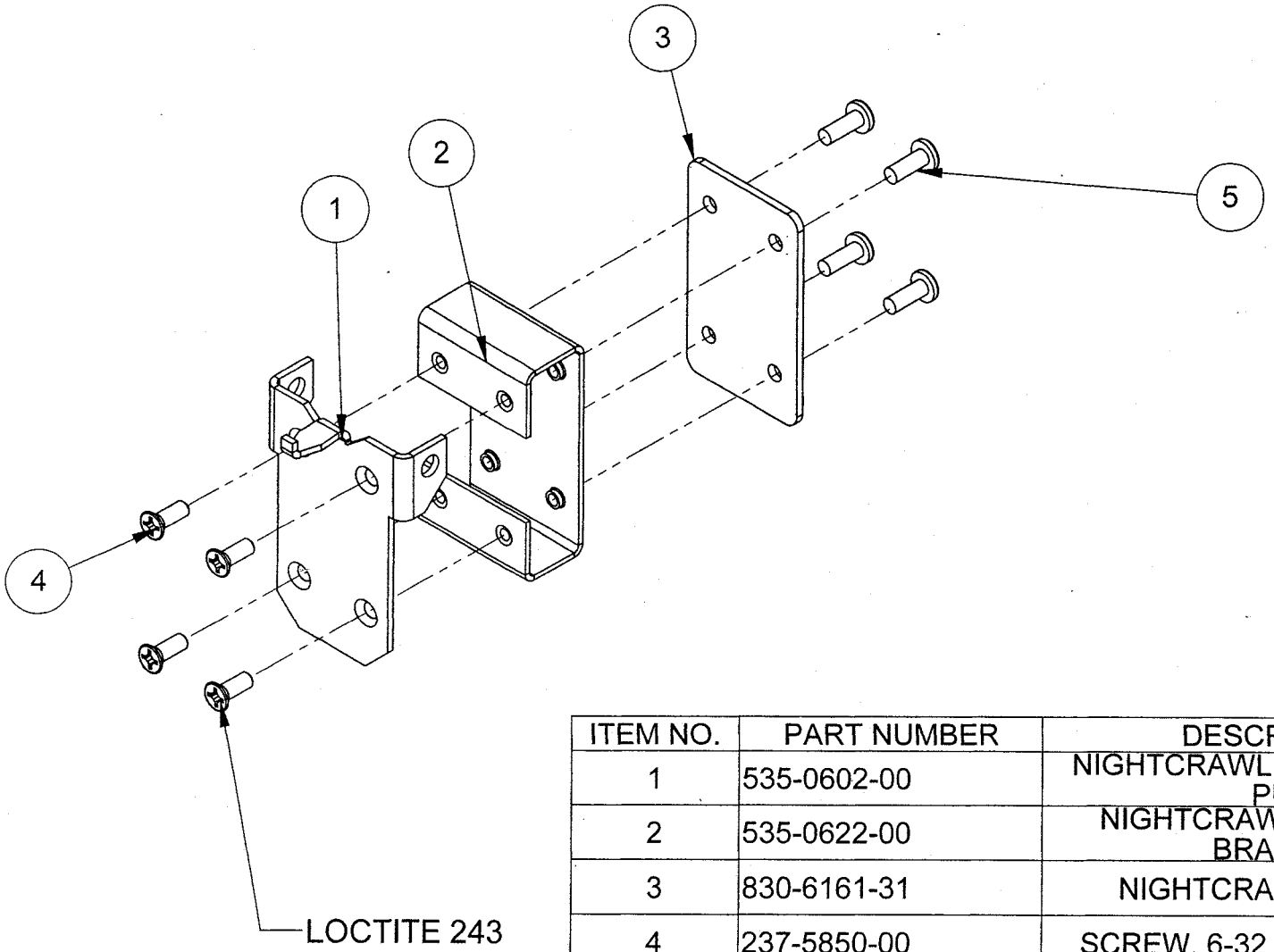

ITEM NO.	PART NUMBER	DESCRIPTION	QTY.
1	535-0602-00	NIGHTCRAWLER ACTUATOR-PUG	1
2	535-0622-00	NIGHTCRAWLER SWITCH BRACKET	1
3	830-6161-31	NIGHTCRAWLER BUTY	1
4	237-5850-00	SCREW, 6-32 x 3/8 PFH ZINC	4
5	237-5012-00	SCREW, 6-32 X 3/8 PPH BLACK OXIDE18-8	4

NIGHTCRAWLER ACTUATOR ASSEMBLY

500-7255-00

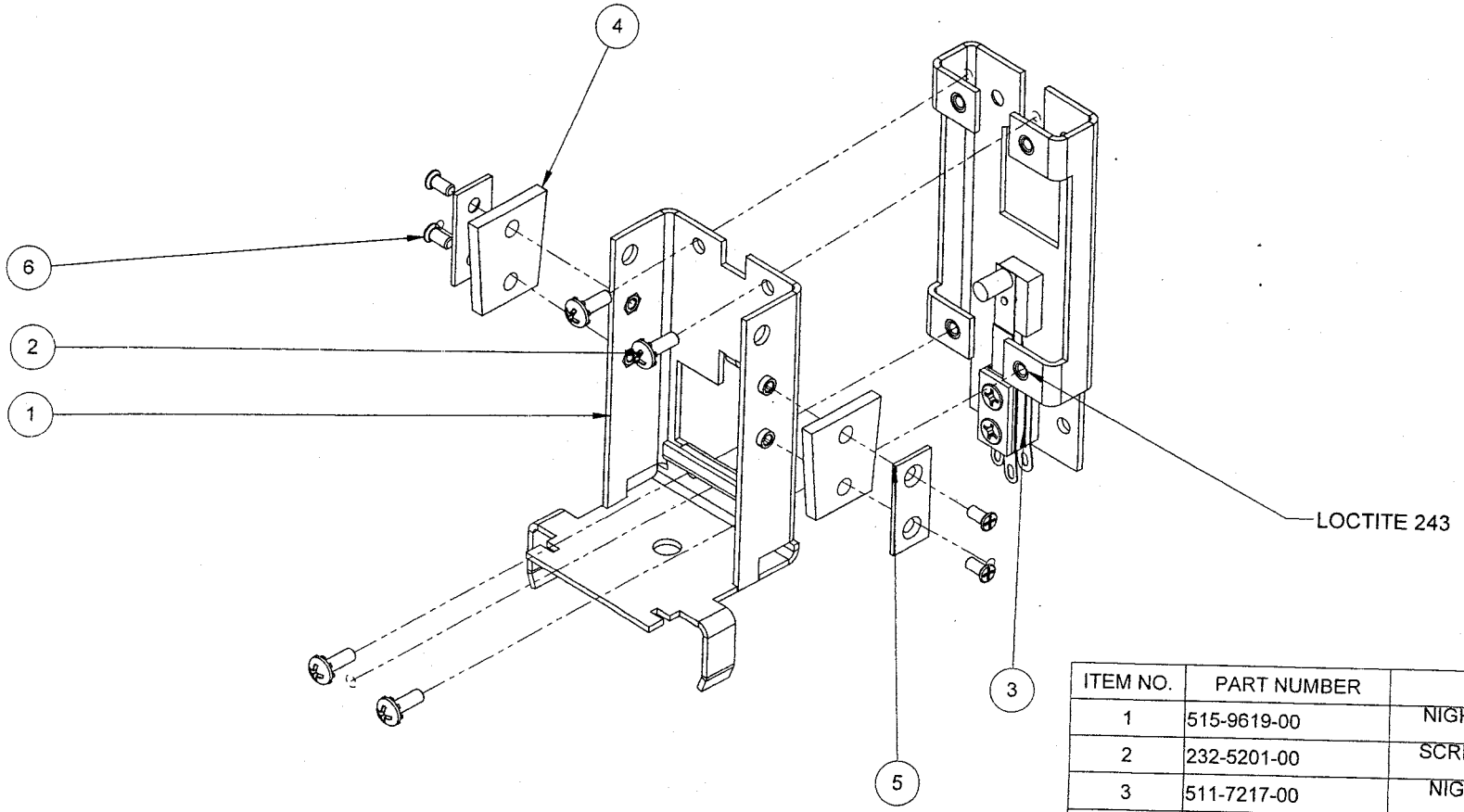

ITEM NO.	PART NUMBER	DESCRIPTION	Default/QTY.
1	515-9619-00	NIGHTCRAWLER HOUSING BRACKET	1
2	232-5201-00	SCREW, 6-32 X 3/8" PPH MS SEMS	4
3	511-7217-00	NIGHTCRAWLER SWITCH ASSEMBLY	1
4	626-5067-00	RUBBER BUMPER - BLUE - FASTENED	2
5	535-9648-00	BUMPER HOLDER - FASTENED	2
6	237-5983-04	SCREW, 4-40 X 1/4 PFH - BLACK - 82° UC	4

NIGHTCRAWLER FIGURE MOUNT-VUK

511-7224-00

Vertical Up-Kicker (VUK) Asm. (Right Style), 500-7078-01 (Items 1-9)

ITEM #	QTY	PART #	DESCRIPTION
1	1	535-9590-03	VUK BRACKET - R.H. - NO ACTUATOR
2	1	090-5001-ND	COIL - 23-800, NO DIODE
3	1	515-5941-01	PLUNGER ASSEMBLY
4	1	545-5076-01	COIL SLEEVE
5	1	545-5105-00	RUBBER BUMPER
6	1	180-5209-00	SUB MINIATURE SWITCH - SIM. ROLLER
7	1	535-5203-03	COIL RETAINING BRACKET
8	1	535-6539-00	SWITCH BODY PROTECT PLATE
SH-8	2	237-5937-02	SCREW, 2-56 X 1/2" HWH MS
SH-7	2	232-5300-00	SCREW, 8-32 X 1/4" PPH SEMS
9	1	266-5020-00	COMPRESSION SPRING-CONICAL

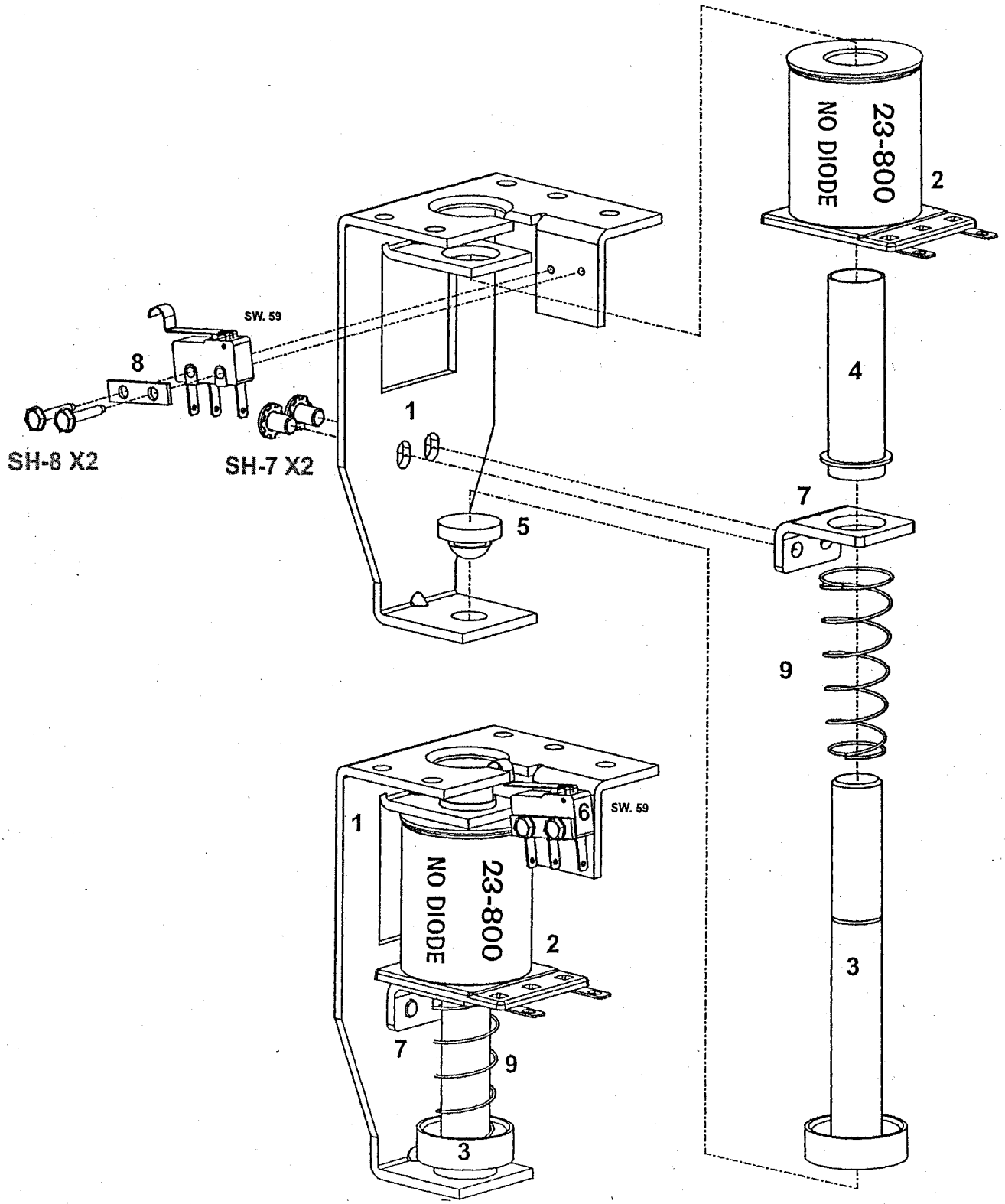

ITEM NO.	PART NUMBER	DESCRIPTION	QTY.
1	535-0627-00	BRACKET, DEFL MOUNT, PUG LE	1
2	535-0628-00	BRACKET, RAMP DEFLECTOR, PUG LE	1
3	232-5200-00	SCREW, 6-32 X 1/4" PPH SEMS	2
4	242-5001-00	#6 WASHER	4
5	830-6161-29	BUTYRATE #29, PUG LE	1
6	254-5008-04	HEX SPACER - 3/4 "	2
7	232-5201-00	SCREW, 6-32 X 3/8" PPH MS SEMS	2
8	820-6912-54	DECAL #54 , PUG LE - D2	1
9	820-6912-55	DECAL #55 , PUG LE - D2	1

RAMP DEFLECTOR ASSEMBLY
511-7212-29

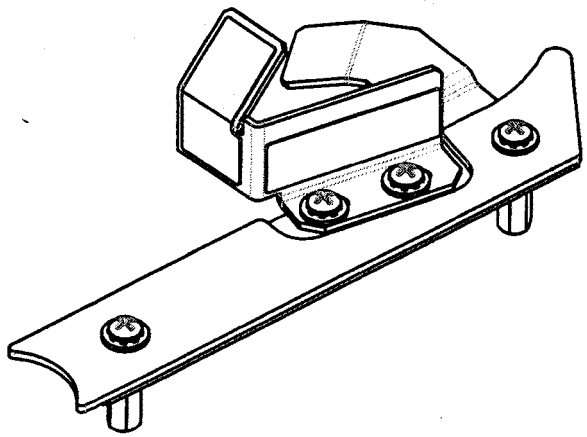

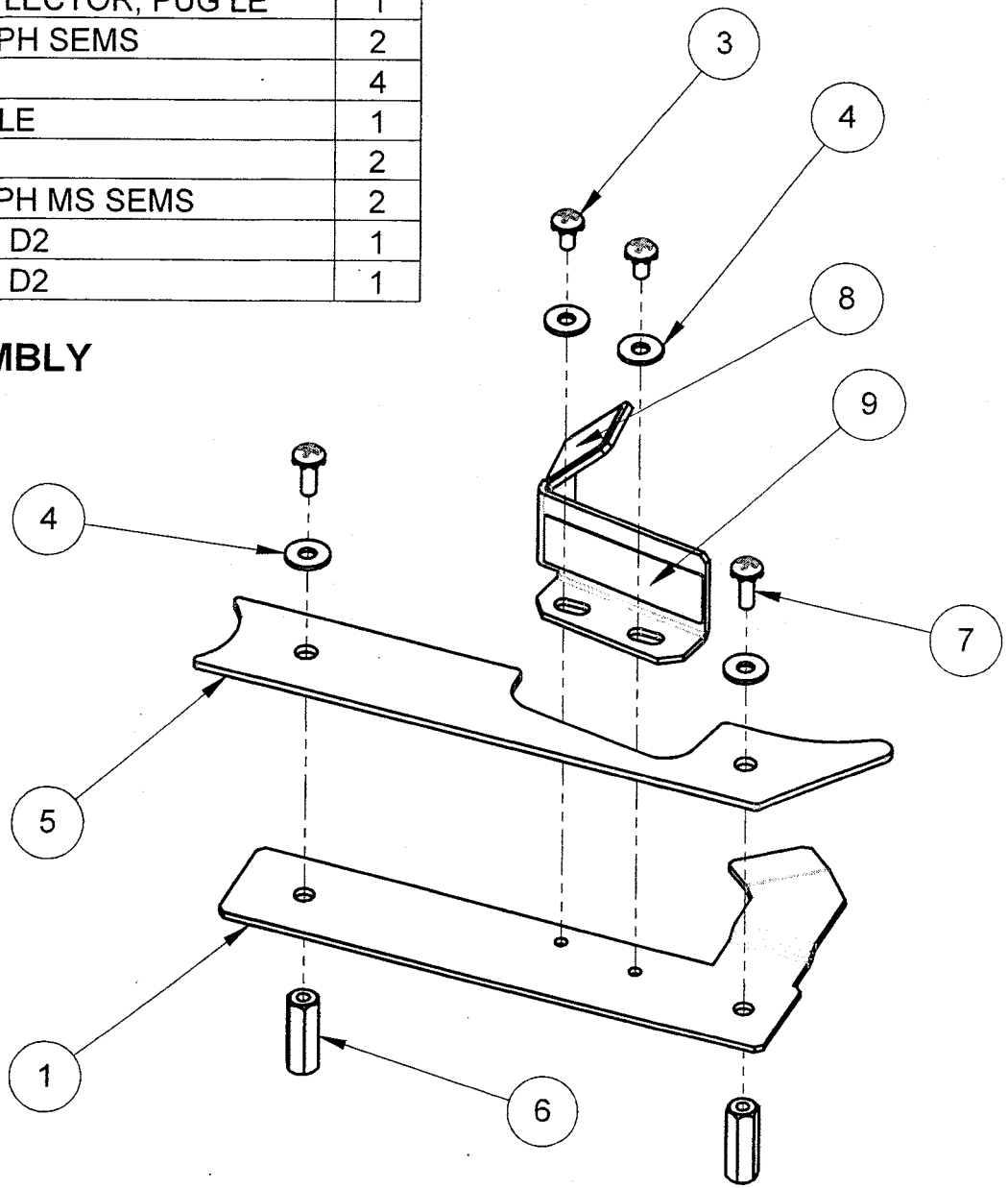

ITEM #	QTY	PART #	DESCRIPTION
1	1	515-7803-00	SUPPORT PLATE - SWING RAMP
2	1	535-0610-00	STEEL RAMP
3	4	249-5003-00	RIVET - 1/8 X 1/4
4	4	242-5002-00	#4 FLAT WASHER - 5/16" O.D.
5	1	820-6912-56	DECAL - ICEMAN RAMP - FLOOR
6	1	820-6912-57	DECAL - ICEMAN RAMP - OUTER WALL 1
7	1	820-6912-58	DECAL - ICEMAN RAMP - INNER WALL 1
8	1	820-6912-59	DECAL - ICEMAN RAMP - OUTER WALL 2
9	1	820-6912-60	DECAL - ICEMAN RAMP - INNER WALL 2

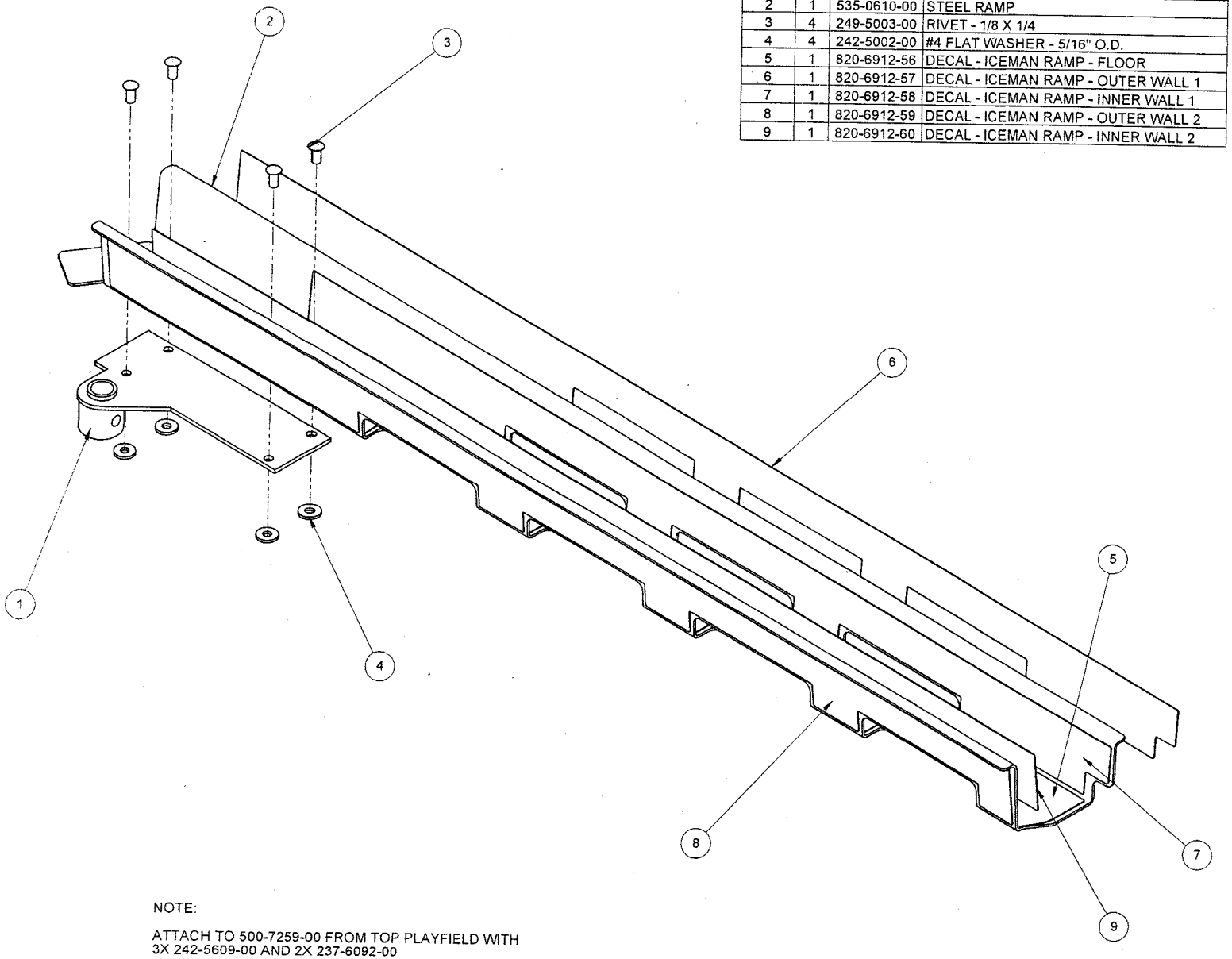

NOTE:

ATTACH TO 500-7259-00 FROM TOP PLAYFIELD WITH
3X 242-5609-00 AND 2X 237-6092-00

SWING RAMP ASSEMBLY

510-5776-00

b22

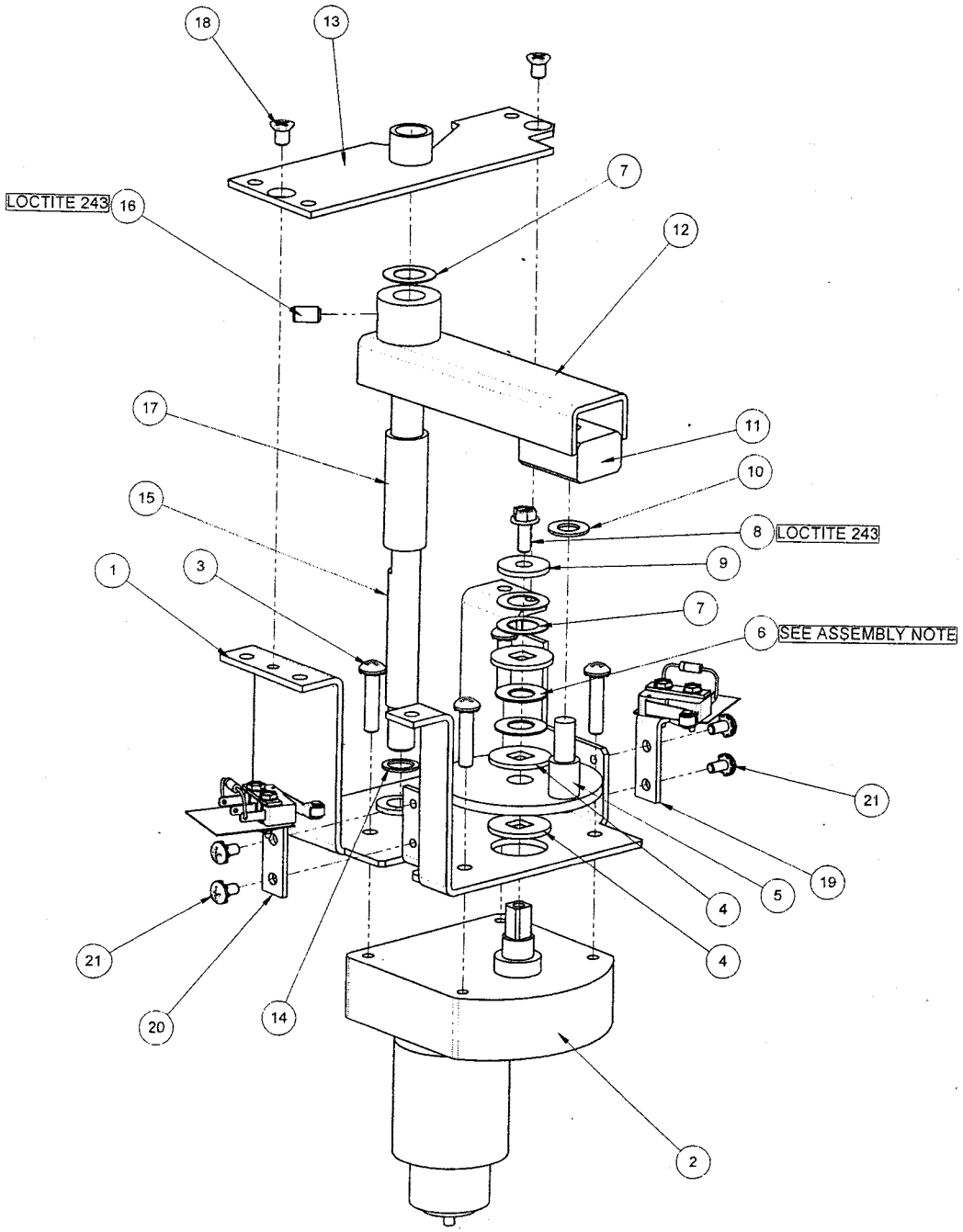

ITEM #	QTY	PART #	DESCRIPTION
1	1.	515-7801-00	MOTOR BRACKET ASSEMBLY
2	1	511-7233-00	MOTOR AND CABLE ASSEMBLY
3	4	232-5304-00	SCREW, #8-32 X 3/4" PPH MS SEMS
4	3	535-0612-00	DRIVE PLATE
5	1	515-9623-00	DRIVE WHEEL
6	2	269-5007-00	BELLEVILLE DISC SPRING
7	3	242-5608-00	.010 SHIM WASHER
8	1	237-5903-00	SCREW, 8-32 X 3/8" HWH
9	1	242-5038-00	WASHER 13/64 ID X 5/8 OD X 1/16
10	1	242-5091-00	WASHER, 1/2 X 17/64 X .03 - DT
11	1	545-7311-00	GLIDE BLOCK
12	1	515-9622-00	LOWER ACTUATOR
13	1	515-7802-00	SHAFT BRACKET ASSEMBLY
14	1	242-5609-00	.314 ID X .438 OD X .030 THRUST WASHER
15	1	530-7806-00	SHAFT - SWING RAMP
16	2	237-6092-00	SET SCREW, 10-32 X 5/16, SOCKET CUP PT
17	1	530-7807-00	TUBULAR SPACER
18	2	237-6030-02	SCREW, 8-32 x 1/4 PFH 82° U/C MS
19	1	511-7219-00	SWITCH BRACKET ASSEMBLY - RIGHT
20	1	511-7220-00	SWITCH BRACKET ASSEMBLY - LEFT
21	4	232-5200-00	SCREW, 6-32 X 1/4" PPH SEMS

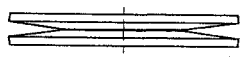

ASSEMBLE 2X ITEM 6 AS SHOWN

MOTOR ASSEMBLY - SWING RAMP

500-7259-00

ITEM #	QTY	PART #	DESCRIPTION
1	1	535-0615-00	SWITCH BRACKET - LEFT - SWING RAMP
2	1	545-6268-00	FISCHE PAPER
3	1	180-5119-02	MICRO-SWITCH - LIGHT ACTUATION
4	1	535-6539-00	SWITCH BODY PROTECT PLATE
5	2	237-5937-02	SCREW, 2-56 X 1/2" HWH MS
6	1	112-5003-00	DIODE - 1N4004

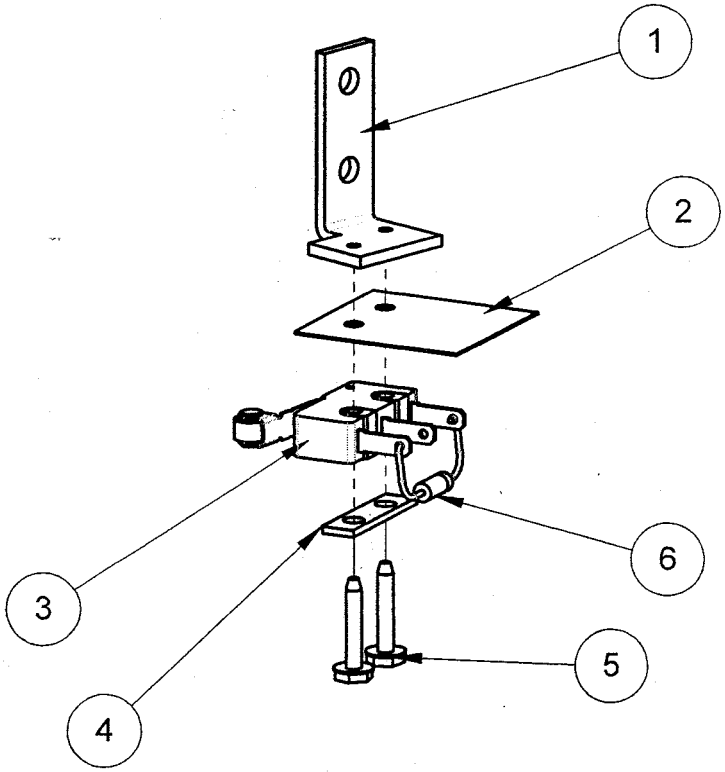

SWITCH BRACKET ASSEMBLY - LEFT

511-7220-00

ITEM #	QTY	PART #	DESCRIPTION
1	1	535-0614-00	SWITCH BRACKET - RIGHT - SWING RAMP
2	1	545-6268-00	FISCHE PAPER
3	1	180-5119-02	MICRO-SWITCH - LIGHT ACTUATION
4	1	112-5003-00	DIODE - 1N4004
5	1	535-6539-00	SWITCH BODY PROTECT PLATE
6	2	237-5937-02	SCREW, 2-56 X 1/2" HWH MS

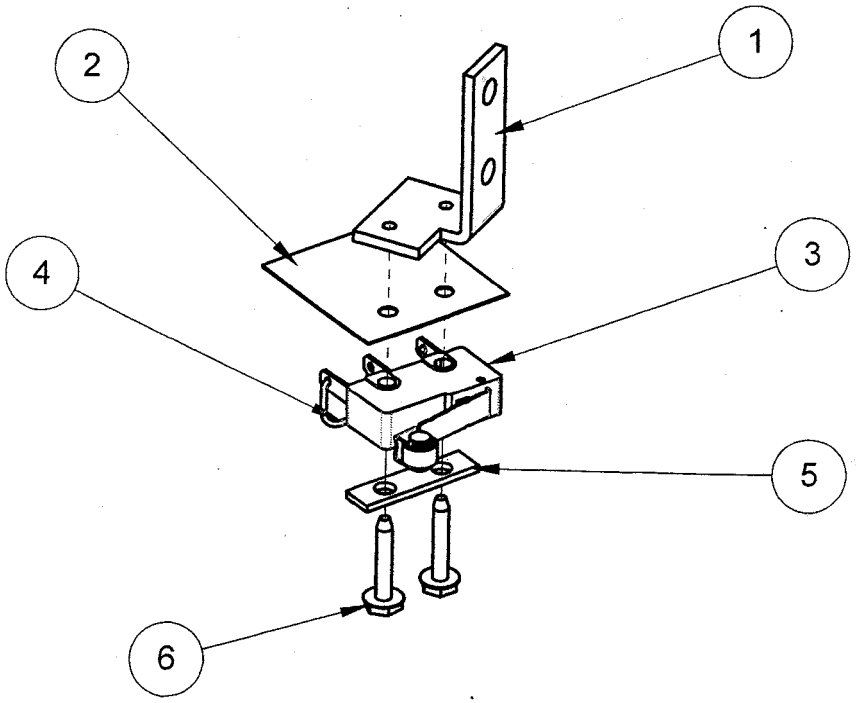

SWITCH BRACKET ASSEMBLY - RIGHT

511-7219-00

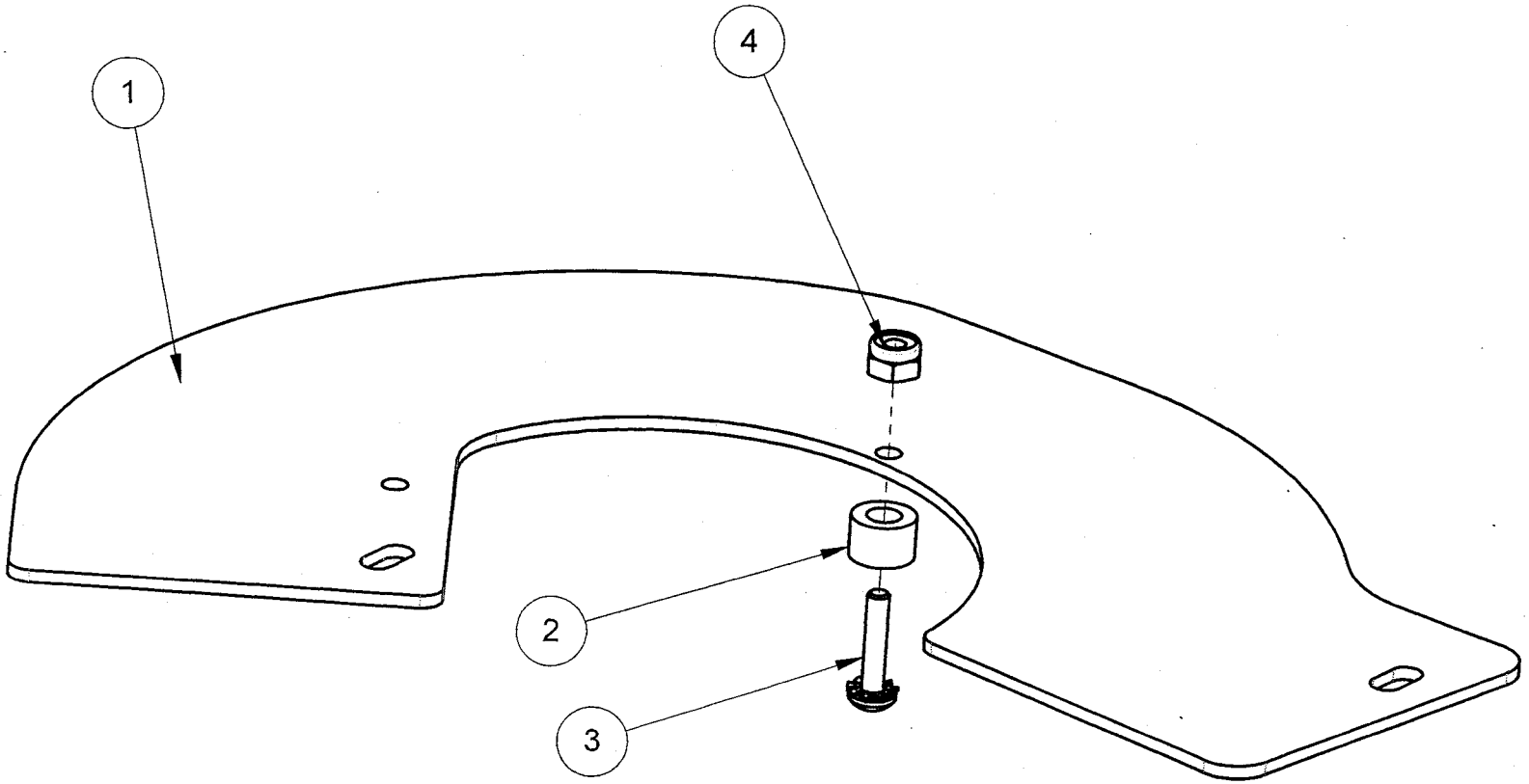

ITEM #	QTY	PART #	DESCRIPTION
1	1	830-6161-26	BUTY #26
2	1	254-5000-02	NYLON SPACER - BLACK - 3/8 OD X .200 ID X 1/4"
3	1	232-5203-00	SCREW, 6-32 X 5/8 PPH SEMS ZINC
4	1	240-5005-00	6-32 NYLON STOP NUT

BUTY ASSEMBLY #26 - LE

511-7212-26

b26

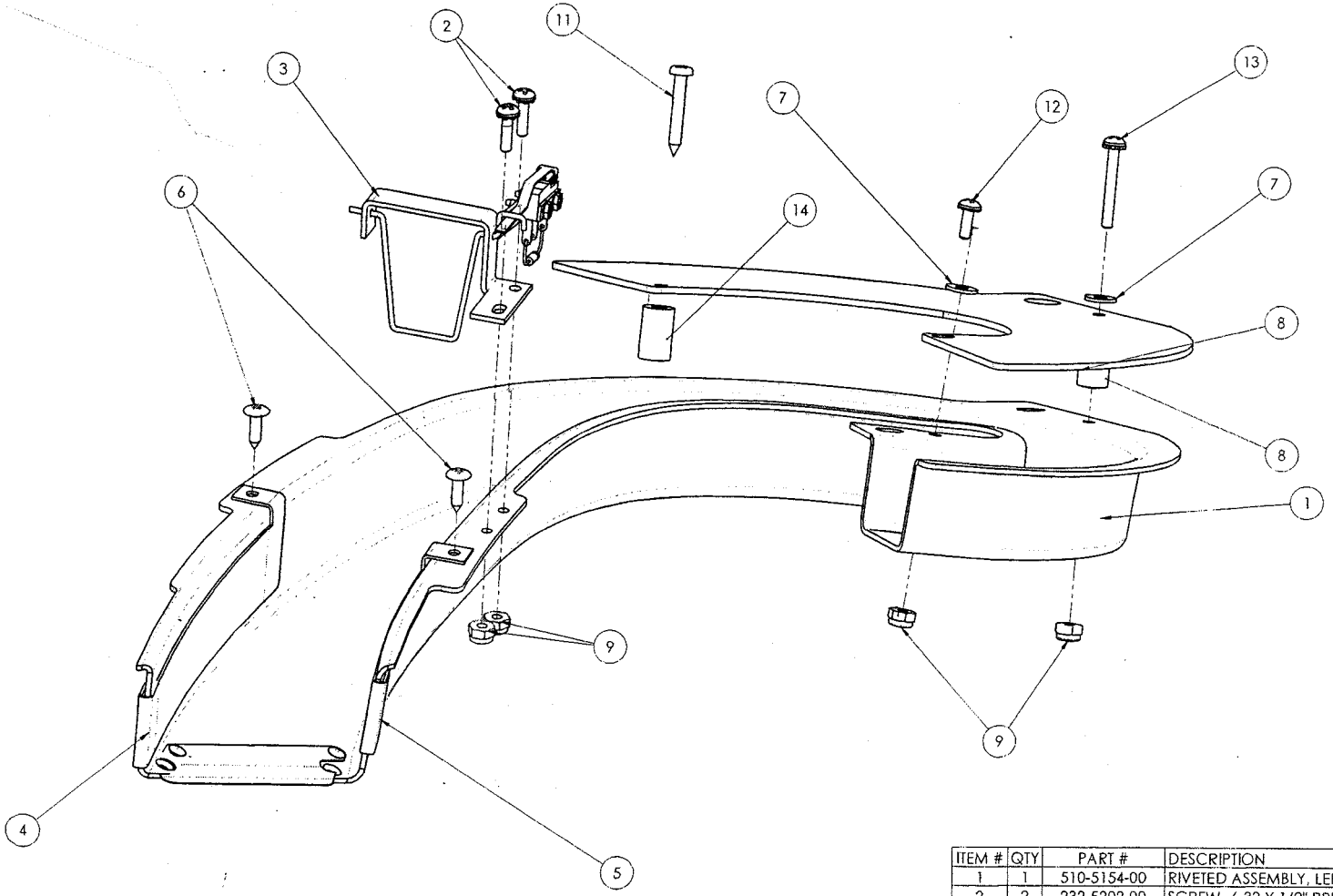

ITEM #	QTY	PART #	DESCRIPTION
1	1	510-5154-00	RIVETED ASSEMBLY, LEFT ENTRANCE RAMP, PUG (PRO)
2	2	232-5202-00	SCREW, 6-32 X 1/2" PPH MS SEMS
3	1	515-6556-01-GE	R/U SWITCH ASSEMBLY -01 W/ GENERIC CABLE
4	1	535-0572-00	LEFT RAMP PROTECTOR-LEFT
5	1	535-0607-00	LEFT RAMP PROTECTOR-RIGHT
6	2	237-5809-00	SCREW, #6 X 1/2" PTH A
7	2	242-5001-00	#6 WASHER
8	1	254-5000-12	NYLON SPACER - BLACK - 3/8 OD X .175 ID X 3/8"
9	4	240-5005-00	6-32 NYLON STOP NUT
10	1	830-6161-27	BUTY # 27
11	1	232-5004-00	SCREW, #6 X 1 PPH AB ZINC
12	1	232-5201-00	SCREW, 6-32 X 3/8" PPH MS SEMS
13	1	232-5206-00	SCREW, 6-32 X 1" PPH SEMS
14	1	254-5000-14	NYLON SPACER - BLACK - 3/8 OD X .175 ID X 5/8"

LEFT RAMP ENTRANCE ASSEMBLY- LE

511-6998-01

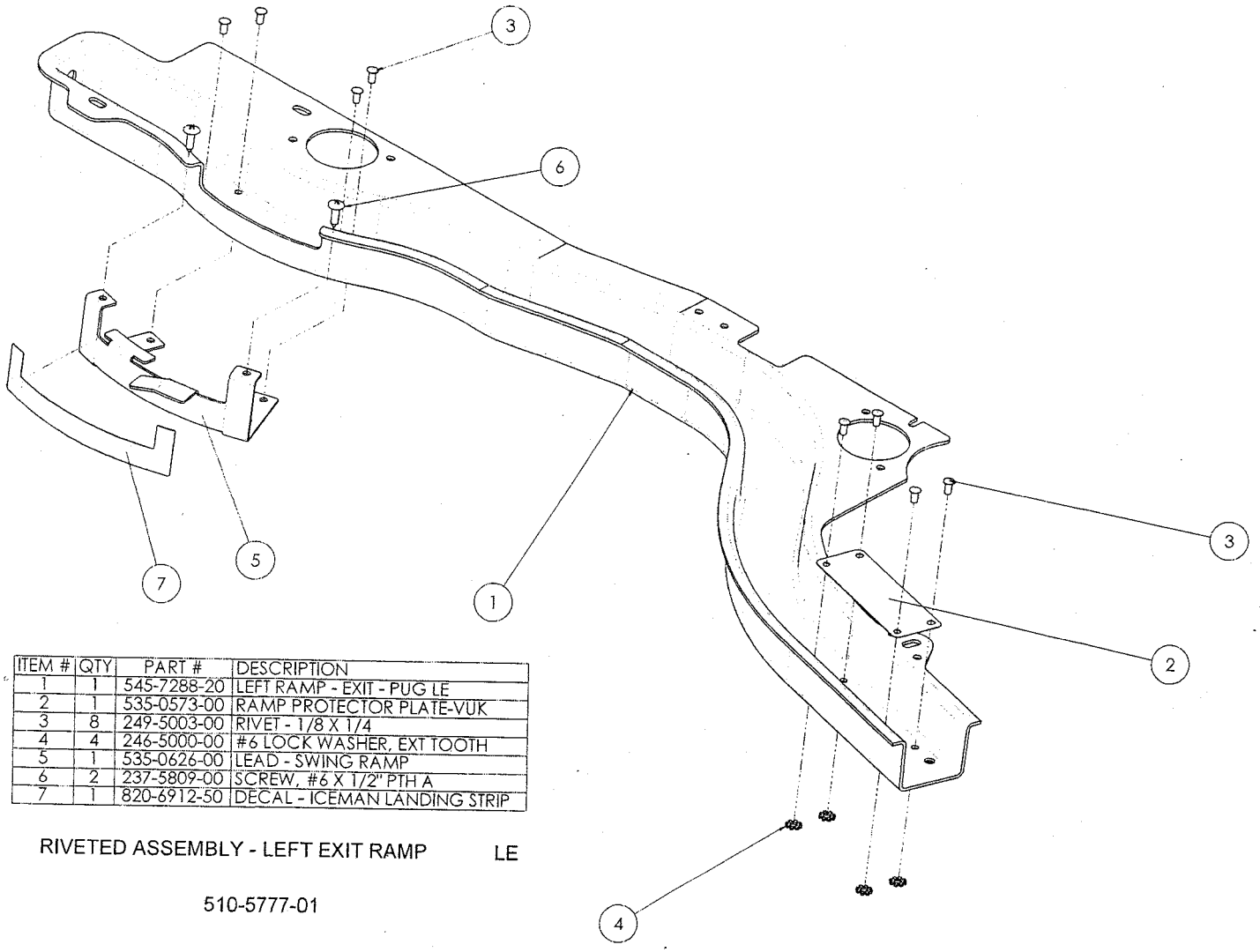

ITEM #	QTY	PART #	DESCRIPTION
1	1	545-7288-20	LEFT RAMP - EXIT - PUG LE
2	1	535-0573-00	RAMP PROTECTOR PLATE-VUK
3	8	249-5003-00	RIVET - 1/8 X 1/4
4	4	246-5000-00	#6 LOCK WASHER, EXT TOOTH
5	1	535-0626-00	LEAD - SWING RAMP
6	2	237-5809-00	SCREW, #6 X 1/2" PTH A
7	1	820-6912-50	DECAL - ICEMAN LANDING STRIP

RIVETED ASSEMBLY - LEFT EXIT RAMP LE

510-5777-01

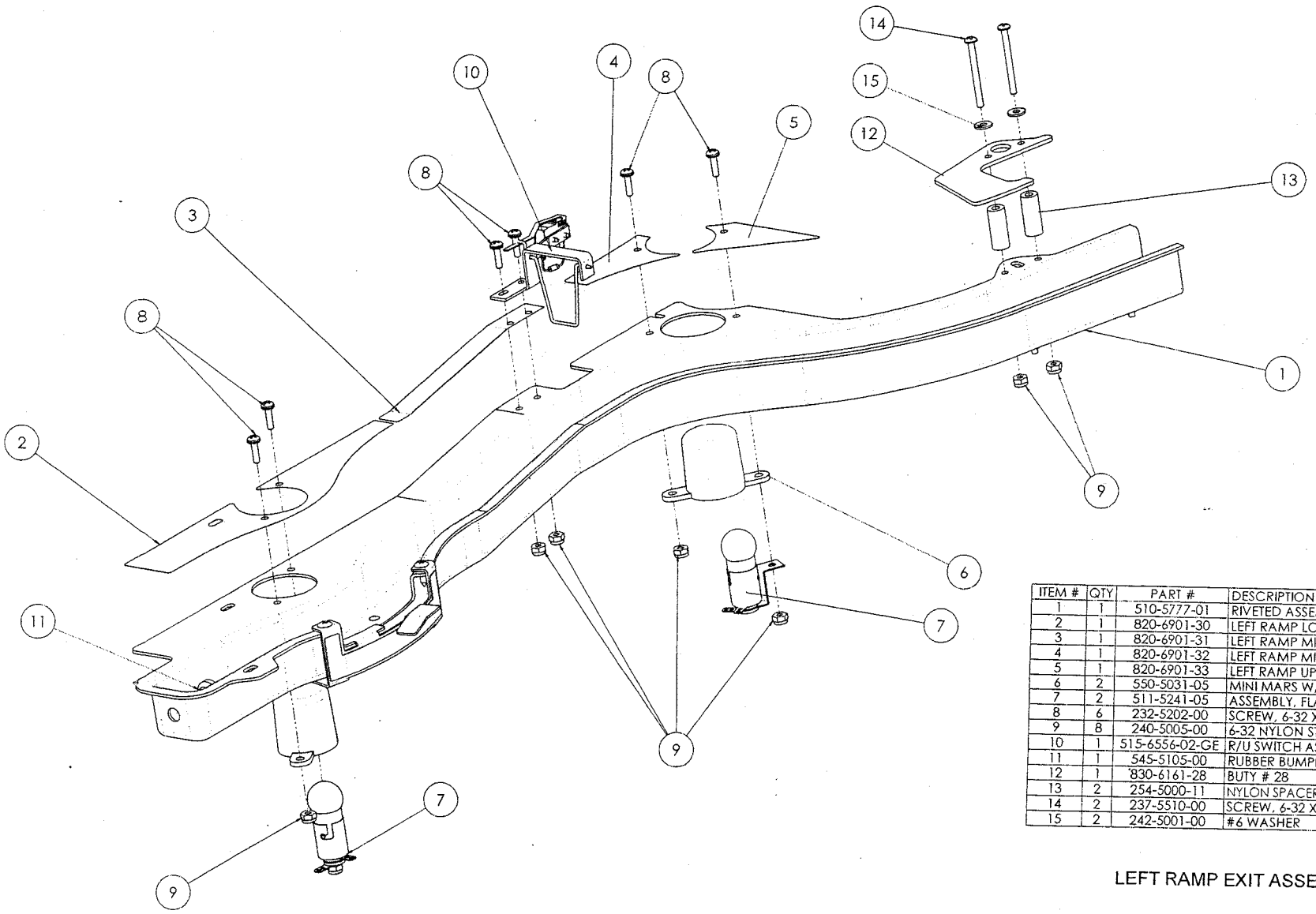

ITEM #	QTY	PART #	DESCRIPTION
1	1	510-5777-01	RIVETED ASSEMBLY - LEFT EXIT RAMP - PUG LE
2	1	820-6901-30	LEFT RAMP LOWER DECAL
3	1	820-6901-31	LEFT RAMP MID DECAL
4	1	820-6901-32	LEFT RAMP MID-UPPER- TOP DECAL
5	1	820-6901-33	LEFT RAMP UPPER-TOP DECAL
6	2	550-5031-05	MINI MARS W/ EARS - BLUE SB
7	2	511-5241-05	ASSEMBLY, FLASH LAMP BLUE
8	6	232-5202-00	SCREW, 6-32 X 1/2" PPH MS SEMS
9	8	240-5005-00	6-32 NYLON STOP NUT
10	1	515-6556-02-GE	R/U SWITCH ASSEMBLY -02 W/ GENERIC CABLE
11	1	545-5105-00	RUBBER BUMPER
12	1	830-6161-28	BUTY # 28
13	2	254-5000-11	NYLON SPACER - BLACK - 3/8 OD X .175 ID X 7/8"
14	2	237-5510-00	SCREW, 6-32 X 1-1/2" PPH
15	2	242-5001-00	#6 WASHER

LEFT RAMP EXIT ASSEMBLY LE

511-6999-01

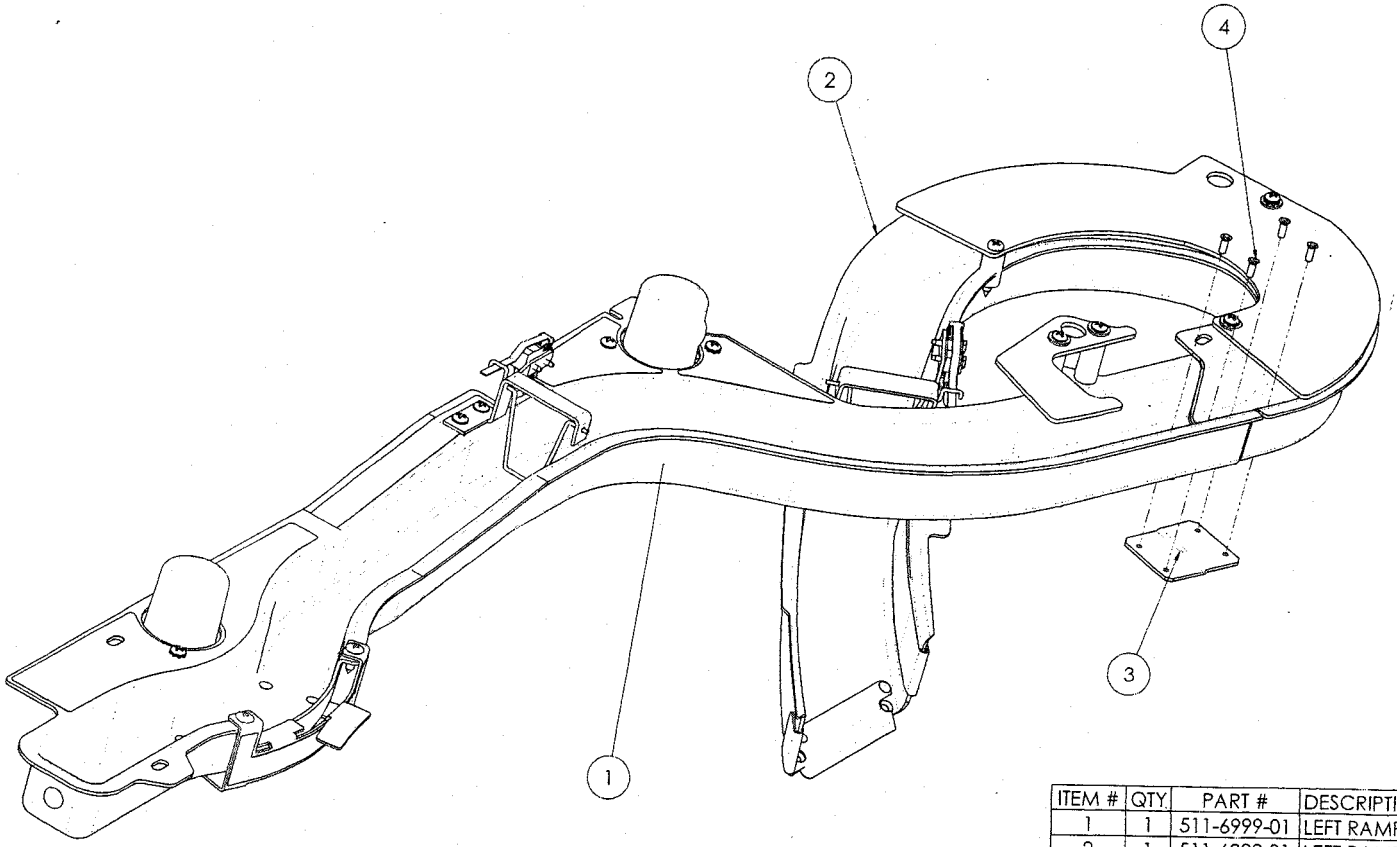

ITEM #	QTY.	PART #	DESCRIPTION
1	1	511-6999-01	LEFT RAMP EXIT ASSEMBLY - PUG LE
2	1	511-6998-01	LEFT RAMP ENTRANCE ASSEMBLY-PUG LE
3	1	535-0546-00	RAMP BRIDGE PLATE
4	4	237-6151-00	4-40 X 5/16 PFH U/C MS

LEFT PLASTIC RAMP ASSEMBLY LE

500-7224-01

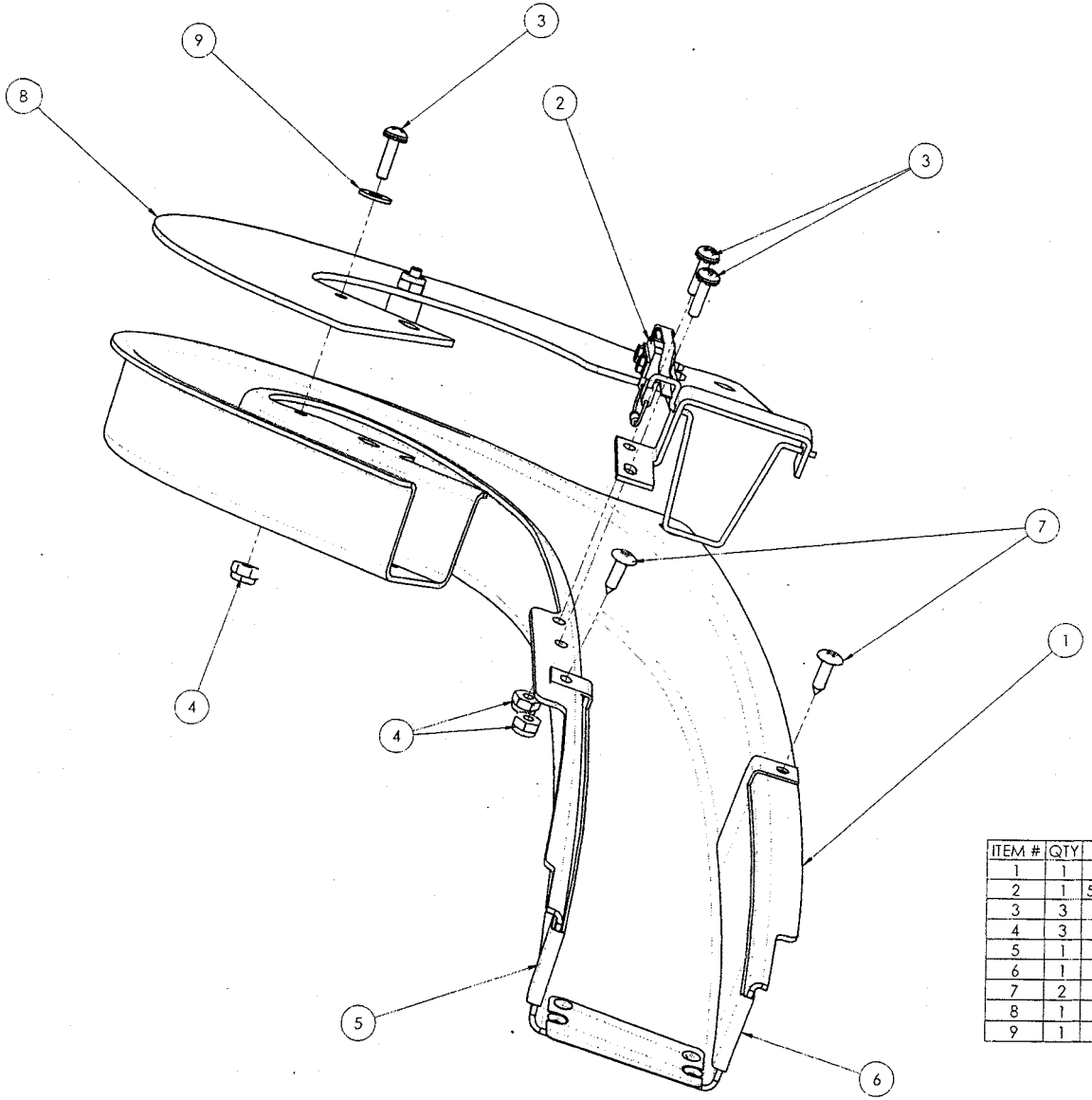

ITEM #	QTY	PART #	DESCRIPTION
1	1	510-5155-00	RIVETED ASSEMBLY, RIGHT ENTRANCE RAMP-PUG (PRO)
2	1	515-6556-02-GE	R/U SWITCH ASSEMBLY -02 W/ GENERIC CABLE
3	3	232-5202-00	SCREW, 6-32 X 1/2" PPH MS SEMS
4	3	240-5005-00	6-32 NYLON STOP NUT
5	1	535-0608-00	RIGHT RAMP PROTECTOR-LEFT
6	1	535-0609-00	RIGHT RAMP PROTECTOR-RIGHT
7	2	237-5809-00	SCREW, #6 X 1/2" PTH A
8	1	511-7212-26	BUTY ASSEMBLY #26 - PUG LE
9	1	242-5001-00	#6 WASHER

RIGHT RAMP ENTRANCE ASSEMBLY· LE

511-7000-01

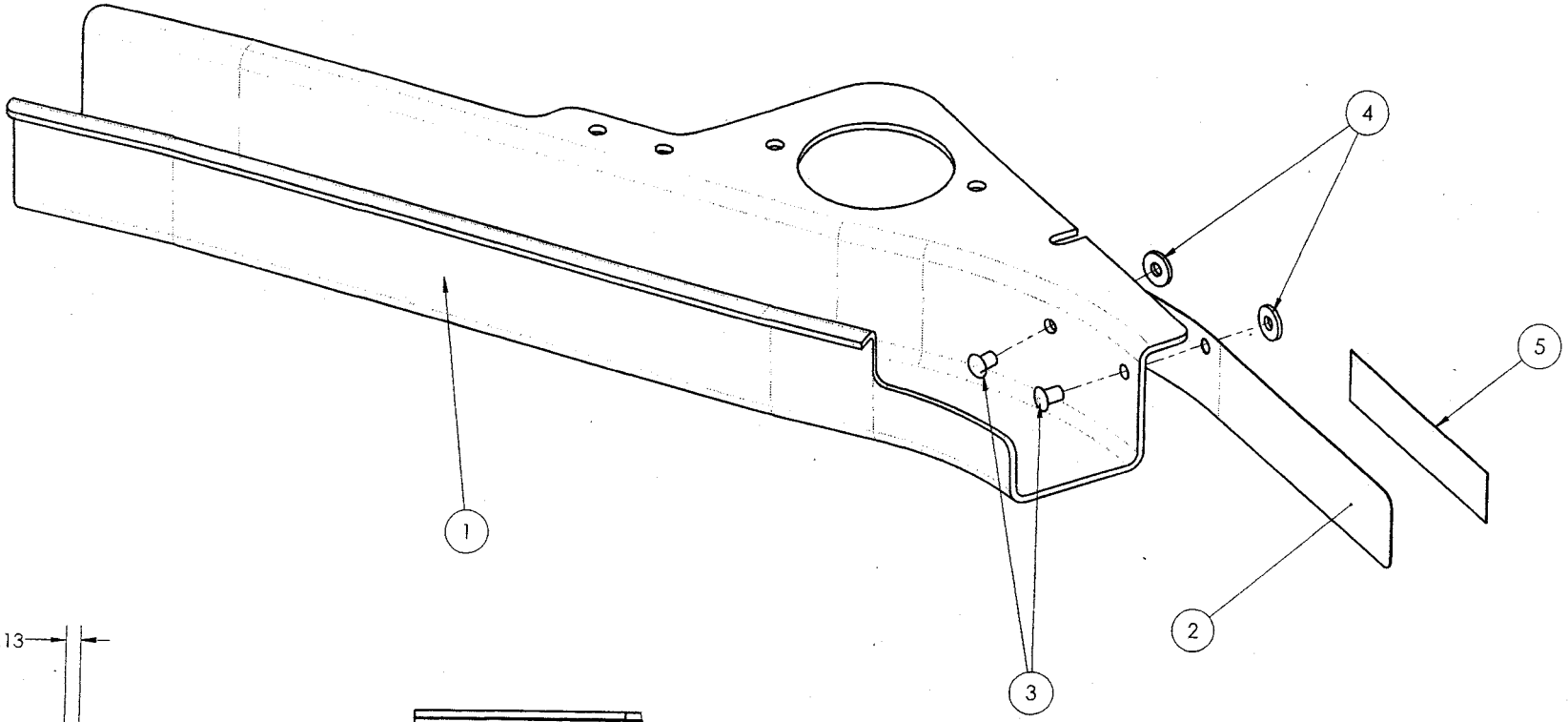

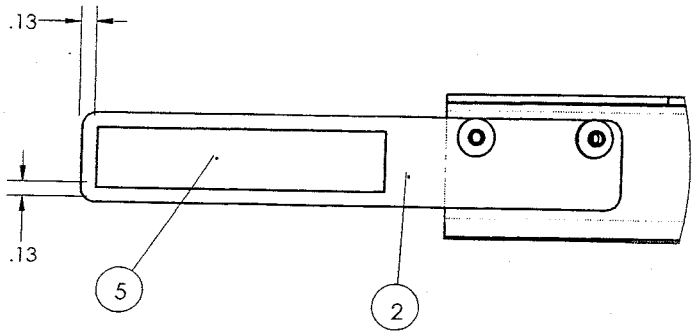

TEFLON STRIP APPLICATION

ITEM #	QTY	PART #	DESCRIPTION
1	1	545-7289-20	RIGHT RAMP - EXIT - PUG LE
2	1	535-0617-00	FLAP - RIGHT RAMP EXIT
3	2	249-5001-00	RIVET - 1/8 X 3/16
4	2	242-5002-00	#4 FLAT WASHER - 5/16" O.D.
5	1	626-5095-02	ADHESIVE TEFLON STRIP

RIVETED ASSEMBLY - RIGHT EXIT RAMP - LE

510-5778-01

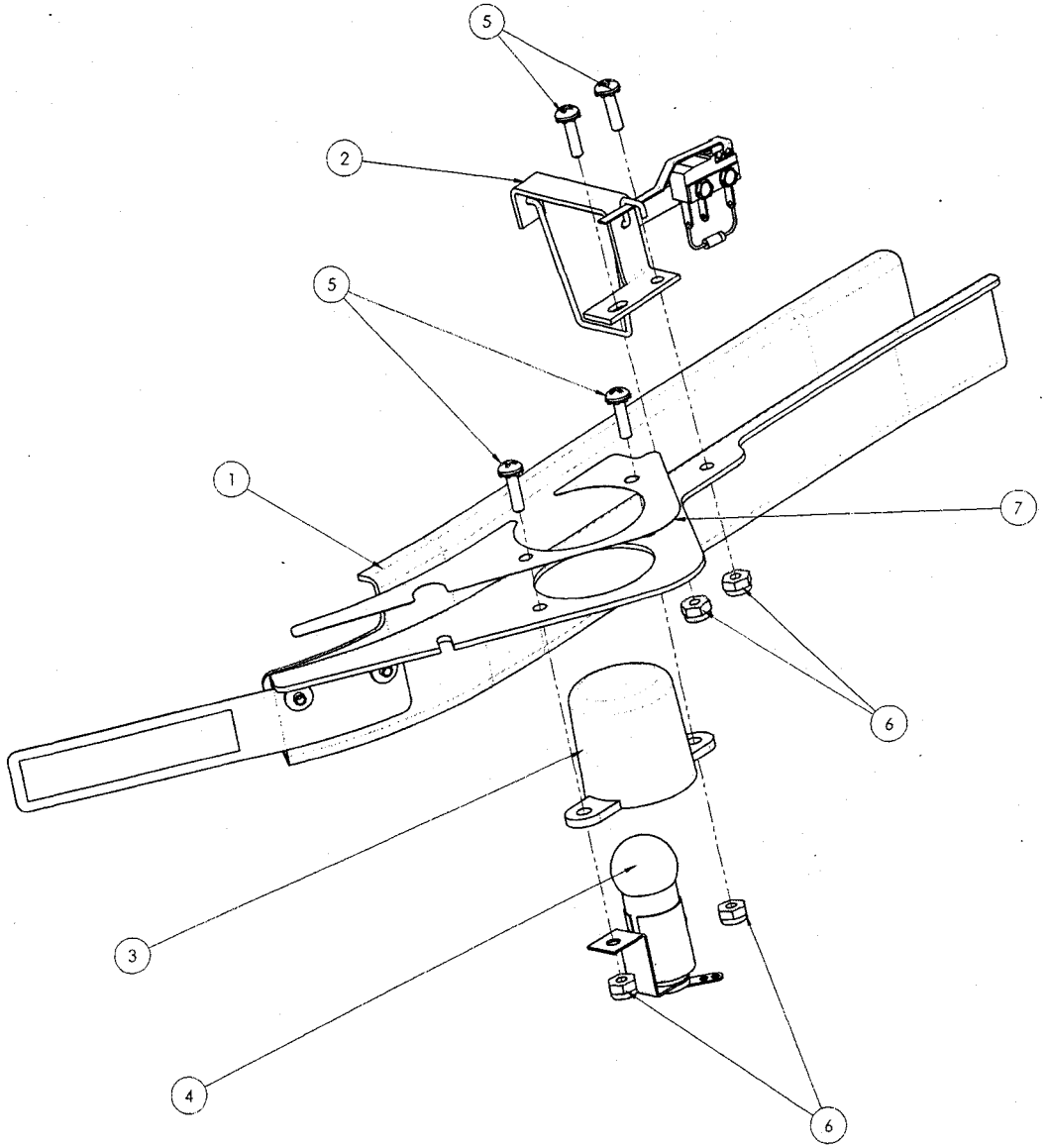

ITEM #	QTY	PART #	DESCRIPTION
1	1	510-5778-01	RIVETED ASSEMBLY - RIGHT EXIT RAMP - PUG LE
2	1	515-6556-01-GE	R/U SWITCH ASSEMBLY -01 W/ GENERIC CABLE
3	1	550-5031-06	MINI MARS W/ EARS - YELLOW SB
4	1	511-5241-00	FLASH LAMP ASSY, GENERIC
5	4	232-5202-00	SCREW, 6-32 X 1/2" PPH MS SEMS
6	4	240-5005-00	6-32 NYLON STOP NUT
7	1	820-6901-29	RIGHT RAMP UPPER DECAL

RIGHT RAMP EXIT ASSEMBLY - LE

511-7001-01

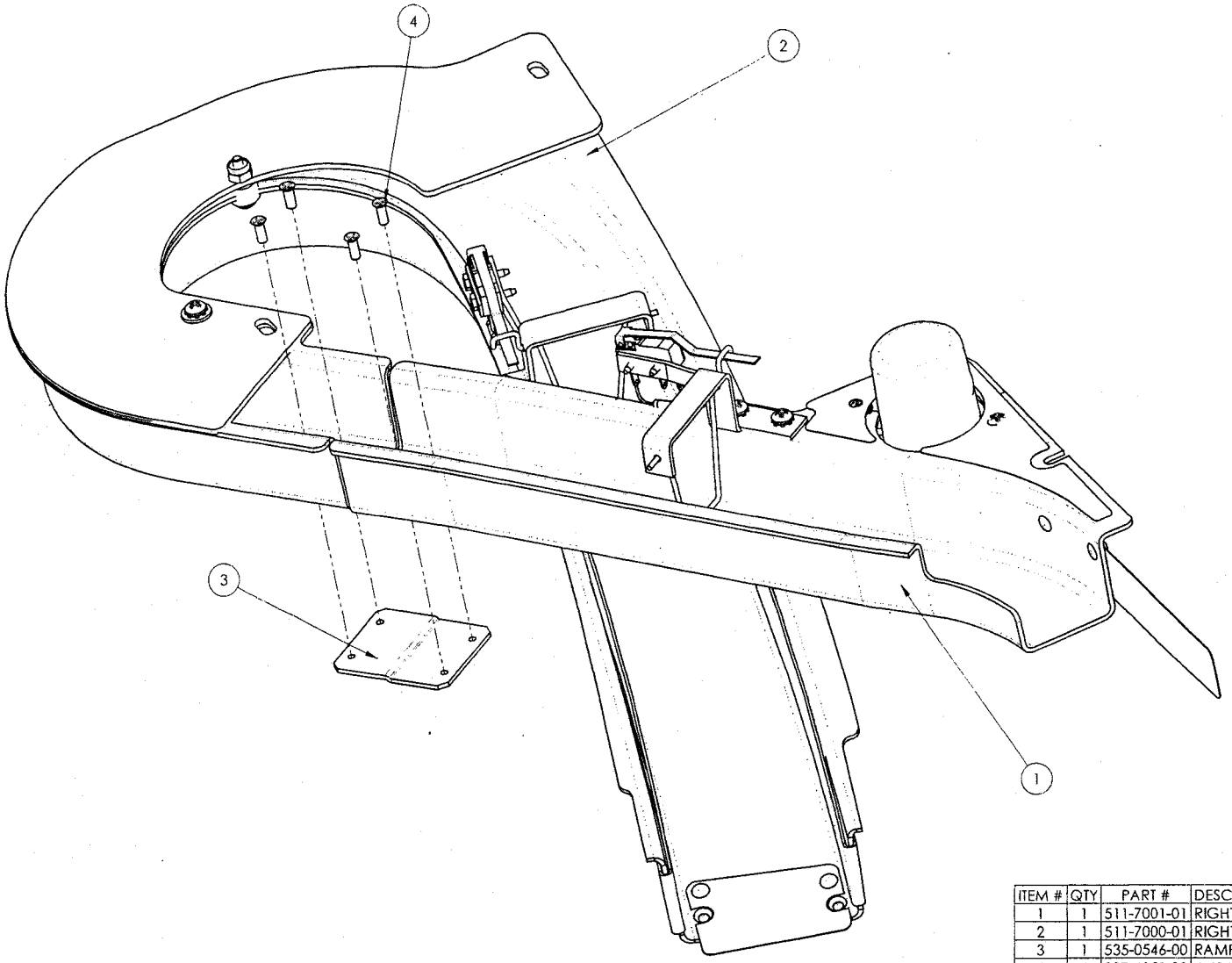

ITEM #	QTY	PART #	DESCRIPTION
1	1	511-7001-01	RIGHT RAMP EXIT ASSEMBLY - PUG LE
2	1	511-7000-01	RIGHT RAMP ENTRANCE ASSEMBLY- PUG LE
3	1	535-0546-00	RAMP BRIDGE PLATE
4	4	237-6151-00	4-40 X 5/16 PFH U/C MS

RIGHT PLASTIC RAMP ASSEMBLY LE

500-7223-01

b34

DIVERTER ASSEMBLY

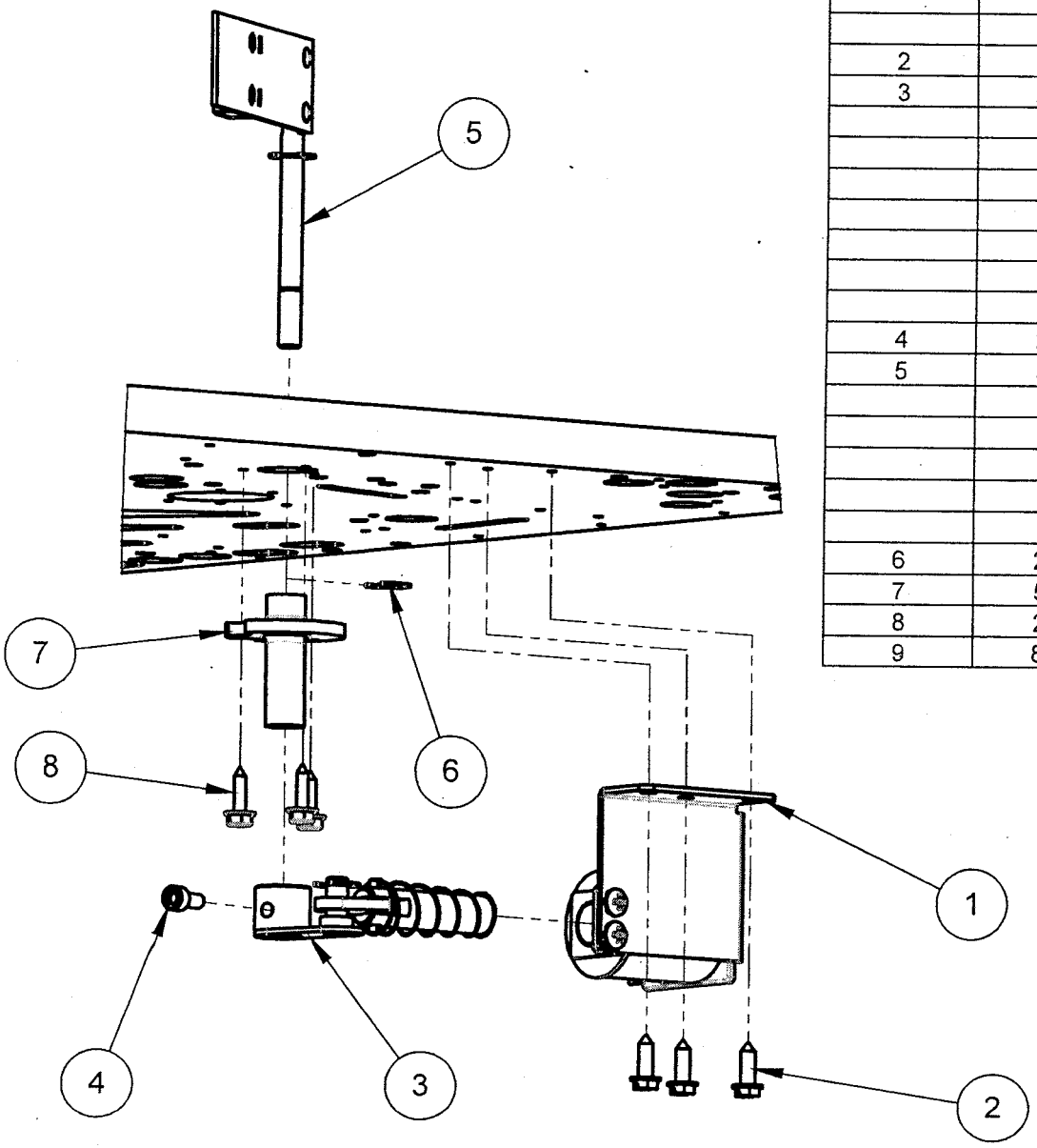

ITEM NO.	PART NUMBER	DESCRIPTION	QTY.
1	500-2456-00	ASSEMBLY, DIVERT COIL	1
	515-9603-00	COIL DIVERT BRACKET	1
	090-5036-ND	COIL - 24-940, NO DIODE	1
	545-5031-00	COIL SLEEVE	1
	535-5203-03	COIL RETAINING BRACKET	1
	232-5300-00	SCREW, 8-32 X 1/4" PPH SEMS	2
2	234-5101-00	SCREW, #8 X 1/2" SLT HWH AB ZINC	3
3	500-7245-00	CRANK ARM & PLUNGER SHAFT ASSY	1
	511-5183-00	PLUNGER & LINK ASSEMBLY	1
	530-5025-05	STEEL PLUNGER	1
	251-5008-00	ROLL PIN, 1/8 X 5/8	1
	545-5293-00	PLUNGER LINK	1
	515-9618-00	CRANK ARM ASSEMBLY	1
	266-5020-00	COMPRESSION SPRING-CONICAL	1
	270-5002-00	RETAINING RING - 1/4"	1
4	237-5897-00	SCREW, 8-32 X 3/8" SHCS ZINC	1
5	511-7005-00	DIVERT PADDLE ASSEMBLY	1
	510-5764-00	DIVERT PADDLE & SHAFT ASSY	1
	626-5057-01	RUBBER BUMPER - BLUE	1
	535-9366-01	BUMPER HOLDER	1
	237-6151-00	SCREW, 4-40 X 5/16" PFH U/C MS	2
	270-5002-00	RETAINING RING - 1/4"	1
6	270-5002-00	RETAINING RING - 1/4"	1
7	545-5070-00	FLIPPER BUSHING	1
8	234-5001-02	SCREW, #6 X 1/2" HWH	3
9	830-51D2-00	PLAYFIELD-SCREENED, PUG LE (#D2)	1

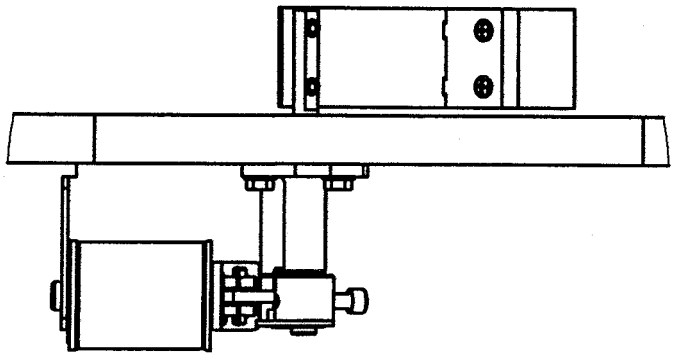

ITEM #	PART NUMBER	DESCRIPTION	QTY.
1	525-5716-01	BACK PANEL, PUG LE	1
2	830-6161-21	BUTYRATE #21, BACK PANEL, PUG LE	1
3	237-5809-00	SCREW, #6 X 1/2" PTH A	5
4	519-5100-00-HF	SOCKET & BULB ASSY	6
5	519-5029-01-LED	5029 SOCKET 5032-01 LED	6
6	040-5000-03	1/4" CABLE CLAMP	2
7	234-5000-00	SCREW, #6 X 3/8" HWH	14
7	234-5000-00	SCREW, #6 X 3/8" HWH	14
8	511-7212-32	BUTY ASSEMBLY #32, PUG LE	1
9	237-5003-00	SCREW, #6 X 7/8" PPH	2
98*	631-5000-00	STAPLE - 5/16	12
99*	036-5583-04-D2	BACK PANEL CABLE - PUG	1

* ITEM NOT SHOWN

BACK PANEL ASSEMBLY, LE
500-7233-01

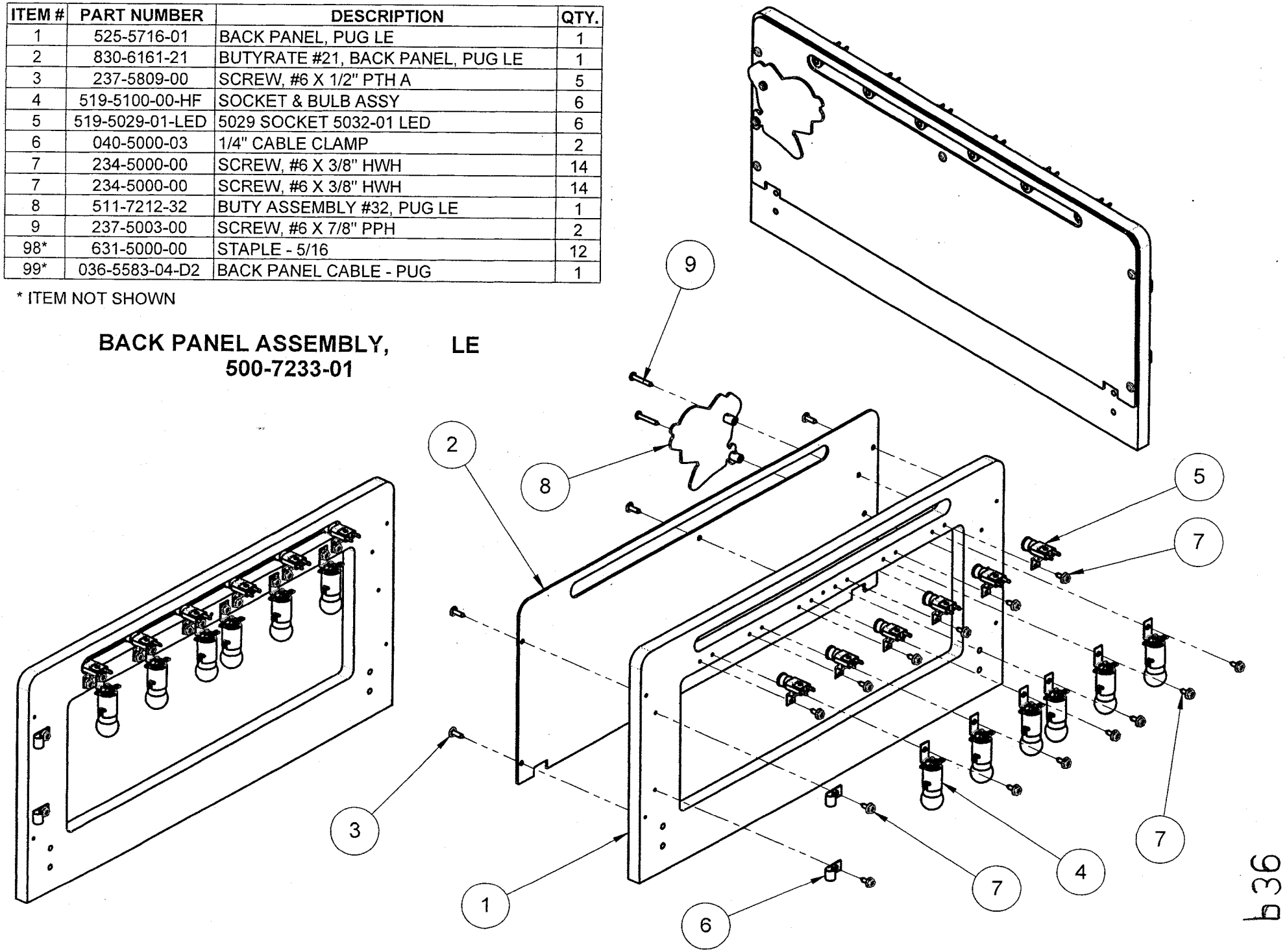

Optional Kits available through your Distributor:

Pinball Location Maintenance Standard Kit (for X-Men LE Pinball) 502-6002-D2

Standard Kit includes : *8 oz. Novus Wax #2 Fine (Red) (**675-0003-01**), Cloth, Rubber Rings (used above playfield), Bulbs (Bulb quantities vary and is limited to 25 per type), Fuses (1/per type) and 4 Pinballs.* ***Note:*** *Quanties, sizes and contents subject to change without notice.*

Pinball Location Maintenance Deluxe Kit (for X-Men LE Pinball) 502-6003-D2

Deluxe Kit includes : *Pinball Location Maintenance Standard Kit as described above plus a quantity of Flipper Rebuild Kits.* ***Note:*** *Quantity varies which equals the same quantity of flippers used in this game.*

▲ THIS GAME KIT INCLUDES (2) FLIPPER REBUILD KITS ▲

Plastics*Kit (for X-Men LE Pinball) 803-5000-D2

Plastics Kit includes: *Plastic Sets (830-6161-XX)*

Decals*Kit (for X-Men LE Pinball) 802-5000-D2

Decals Kit includes: *Decal Set (820-6901-XX), (820-6912-XX), (820-6913-XX), (820-6914-XX)*

***Attention:** No individual Plastic or Decal can be ordered separately, unless noted otherwise. Plastics & Decals are subject to change without notice during and / or after production. Key Fobs subject to availability and may or may not be included in the plastic set. All designs, shapes & pieces used subject to change without notice. Kit contents subject to change. Service Bulletin(s) will announce any critical changes, if warranted. The last 2-digits shown on plastics or decals are for reference only.

X-MEN LE WOVERINE Parts available through your Distributor:

Leg Assy Blue Streak.....500-5921-06

Flip Button Assy Yellow.....500-5026-36

Front Molding New No Hole Blue Streak.....500-6882-02-06

Blue Streak LeftSide Armor.....535-9596-06L

Blue Streak Right Side Armor.....535-9596-06R

Pivot Hinge Left Blue Streak.....535-7999-66L

Pivot Hinge Right Blue Streak.....535-7999-66R

Mirrored Back Glass X-Men LE.....830-52D2-02

Bottom Arch Steel W/Windows - Blue.....535-0415-05

X-MEN LE Magento Parts available through your Distributor:

Leg Assy Glossy Red.....500-5921-23

Flip Button Assy Blue (Solid).....500-5026-35

Front Molding New Style No Hole Glossy-Red.....500-6882-02-22G

Glossy Red Left Side Armor.....535-9596-22G

Glossy Red Right Side Armor.....535-9596-23G

Pivot Hinge LT Glossy Red.....535-7999-22G

Pivot Hinge RT. Glossy Red.....535-7999-23G

Mirrored Back Glass X-Men LE Magento.....830-52D2-00M

Bottom Arch Steel W/Windows - Red.....535-0415-22

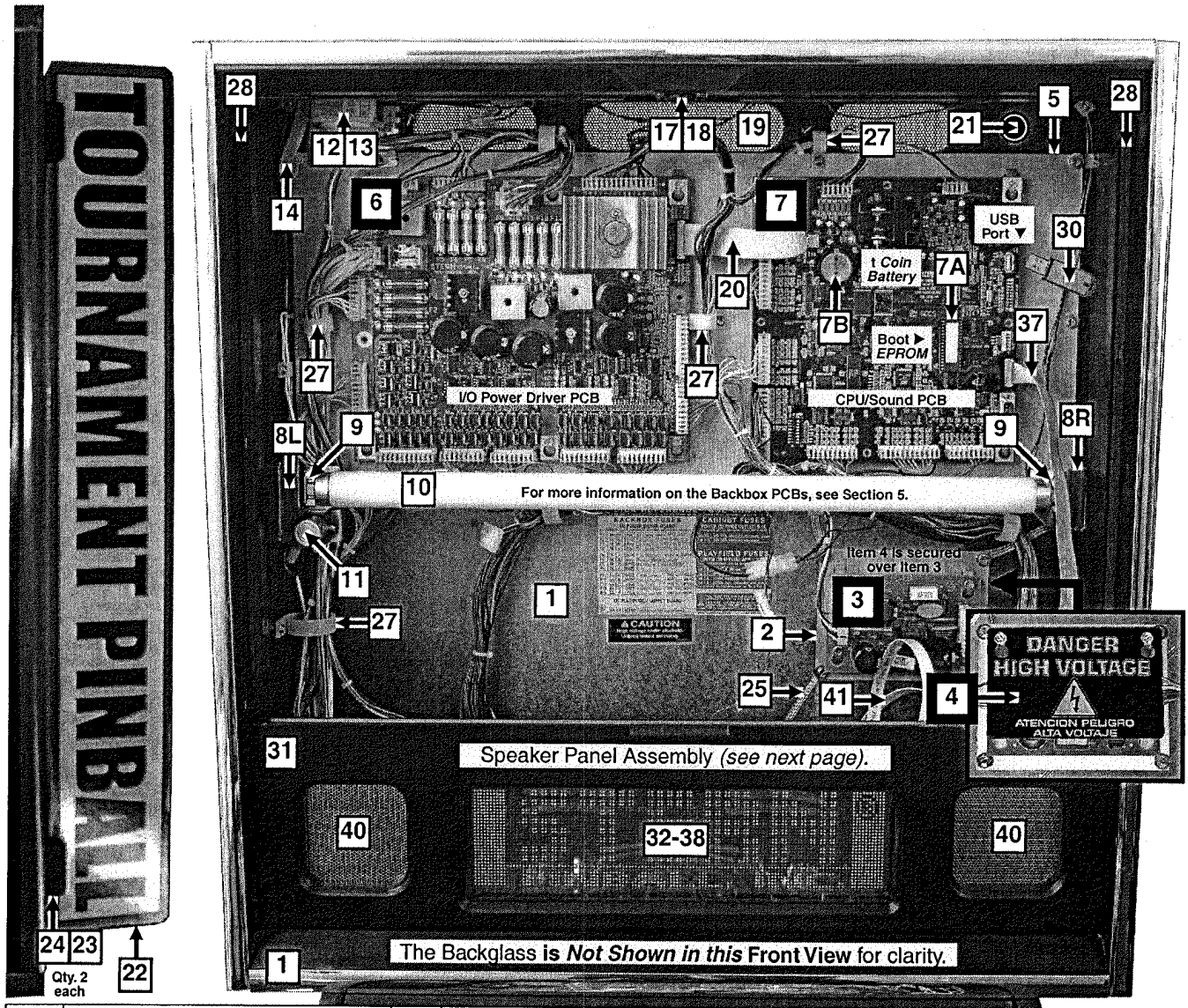

Parts Identification

Nr.	BACKBOX PARTS	QTY.	SPI PART Nr.
1	Backbox X-Men™ (No Parts)	1	525-5631-17-D2
	Item 1 Note: Chrome T-Molding is installed and cannot be ordered separately. Fuse Description **(820-6384-00)** and High Voltage Caution (uL) **(820-6082-01 & -02)** Decals.		
2	PCB Metal Mounting Plate [Display]	1	535-9769-00
3	Display Power Supply PCB	1	**520-5138-00**
	Item 3 is secured to @ bottom by: #8-32 X 3/8" SHWH Swg. (Zinc) (Qty. 2) (237-5975-00)		
4	Plastic Cover [DANGER HIGH VOLTAGE]	1	830-6053-00
	Items 3 & 4 are secured to @ top by: 1-1/4" X 3/8" Plastic Spacer Gray (Qty. 2) (254-5000-05) and #8-32 X 1-3/4" SHWH Ser. (Zinc) (Qty. 2) (237-5975-28)		
5	PCB Metal Mounting Plate [I/O+CPU]	1	535-9664-00
	Items 2 & 5 are secured to Item 1 by: #8 X 1/2" SHWH AB (Zinc) (Qty. 1/hole) (234-5101-00) and #10 Washer 7/32" I.D. X .5" O.D. X 1/16" Thick (Qty. 1/hole) (242-5003-00) *Note: Where a Wire Clamp (Item 27) is mounted, a #10 Washer is not required.*		
6	I/O Power Driver LED	1	**520-5317-00**
7	CPU/Sound PCB LE GAMES NEW USB	1	**520-5307-00**
	7A: 8MB EPROM #M27C801-100F1 (960-5016-00) *Ordering Note: Programmed EPROM (965-BOOT-SAM)* 7B: Coin Cell Battery (CR2430 3V) (000-0644-01) *For USB Memory Stick Information, see Item 30 on the next page.*		
	Items 6 & 7 are secured to Item 5 by: #8-32 X 3/8" SHWH Swage (Zinc) (Qty. 10) (237-5975-00) and 1/4" Slf. Rtn. Spacer White (Qty. 5 [I/O] / Qty. 4 [CPU]) (254-5007-05)		
8L	Fluorescent Light Bracket *(Left Style)*	1	535-7739-00
8R	Fluorescent Light Brckt. *(Right Style)*	1	535-7739-01
	Items 8L & 8R are secured to Item 1 by: #10-24 X 1-1/4" Carriage Bolt Square Neck (Qty. 2/per) (231-5012-00), #10-24 Keps Nut (Qty. 2/per) (240-5207-00) and 3/4" X 3" Reinforced Strapping Tape (Qty. 1, sold in 12" length only) (626-5040-00)		
9	Fluorescent Lamp Holder (Socket)	2	077-5214-01
	Item 9 is secured to Items 8L *and* 8R by: #6-32 X 5/8" PPH MS (Sems) Zinc (Qty. 1/per) (232-5203-00) Lock-In Fluor. Bulb with Yellow Socket Clip (Qty. 1/per) **(545-6271-00)**		
10	Fluorescent Tube 24" (F18T8CW)	1	165-5061-00

Nr.	BACKBOX PARTS	QTY.	SPI PART Nr.
11	Starter - Fluorescent (FS2 Light)	1	165-5011-01
	Starter Base *(with leads)* [on Item 8L]	1	077-5213-00
	Item 11 is secured to Item 8L by: #4-40 X 1/2" PPH MS (Sems) Zc. (Qty. 2) (237-5813-00)		
12	Ballast Mounting Plate	1	535-8657-00
13	Ballast *CU452-W 1/2" Core 120v 60 Hz 13W*	1	010-5015-00
	Items 12 & 13 are secured to Item 1 by: #8 X 1/2" SHWH AB (Zinc) (Qty. 2) (234-5101-00) >>> CAUTION - VERY HOT" Decal (820-6266-00) *EU / UK Only : Ballast, 5/8" Core 50/60 Hz (010-5015-01)*		
14	Ground Strap (5")	1	600-5006-05
15*	Roto Lock Male *(on Cabinet)*	1	355-5006-01
16	Roto Lock Female *(R2-0002-02)*	1	355-5006-02
	Item 16 is secured by: #10-24 X 1-3/4" CBSN (231-5022-00), #10-24 Keps Nut (Qty. 2) (240-5207-00), #10-24 X 2" CBSN (231-5045-00) and #10 Washer 7/32" I.D. X .5" O.D. X 1/16" (Qty. 5) (242-5003-00); *See opposite next page.*		
17	Lock Mounting Plate	1	535-0072-00
18	Lock 5/8" Barrel, 3/4"ø, 1.5" Flat Cam	1	355-5055-00
	Items 17 & 18 are secured by: #8 X 1/2" TP Torx T20 Black (Qty. 2) (237-6173-05)		
19	Back Vent Grill 2-1/2" X 18"	3	545-5072-02
20	Ribbon Cable, 20-Pin (3.5")		036-5000-350
	Item 20 connects the I/O Pwr. Drvr. PCB to the CPU/Sound PCB; For 14-Pin see next page.		
21	Button Hole Plug (Blk) **(Happ #52-6214-00)**	1	500-6566-00
	*Item 21 plugs the Access Hole required if using optional **BETAbrite Sign or Data cables.***		
22	Header Sign **TOURNAMENT PINBALL**	1	545-6133-00
23	Bracket, Tournament Sign (Black)	2	535-0081-02
	Item 22 is mountied to item 23 with #8-32 x 3/8 PPA screw (Qty 2/per) (232-5303-01) & #8-32 Nylock Nut (Qty 2/per) (240-5102-00). Item 23 is secured to Item 1 by: #8 X 5/8" PPH (Qty. 2/per) (232-5101-01)		

PARTS TABLE & VIEWS CONTINUED ON THE NEXT PAGE. ▶

Backbox [S.A.M. System] - Parts

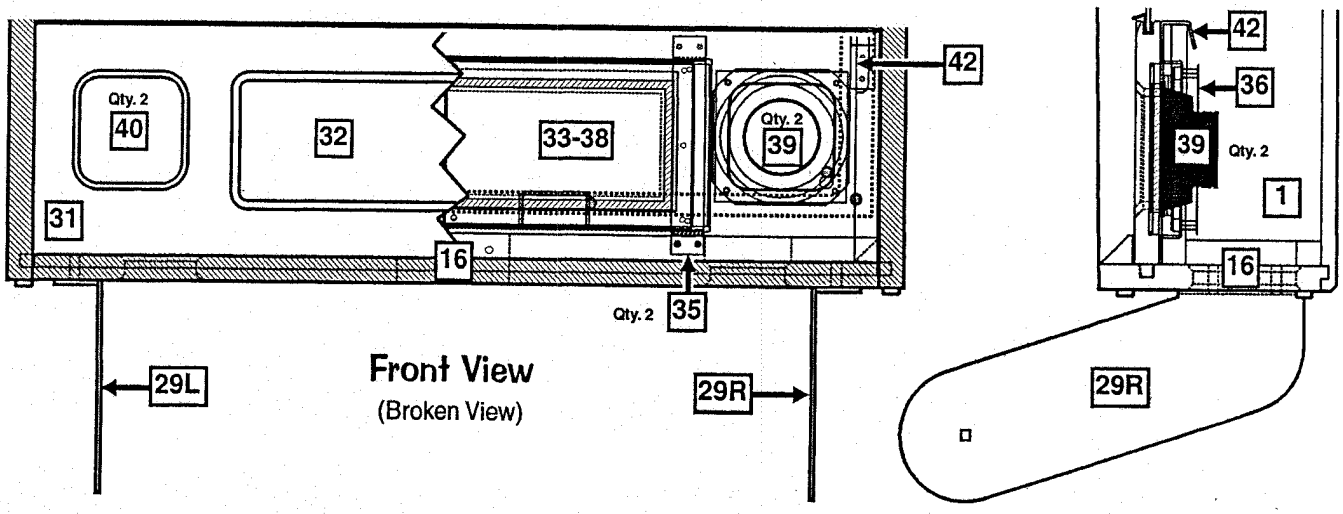

Speaker Panel [S.A.M. System] - Parts

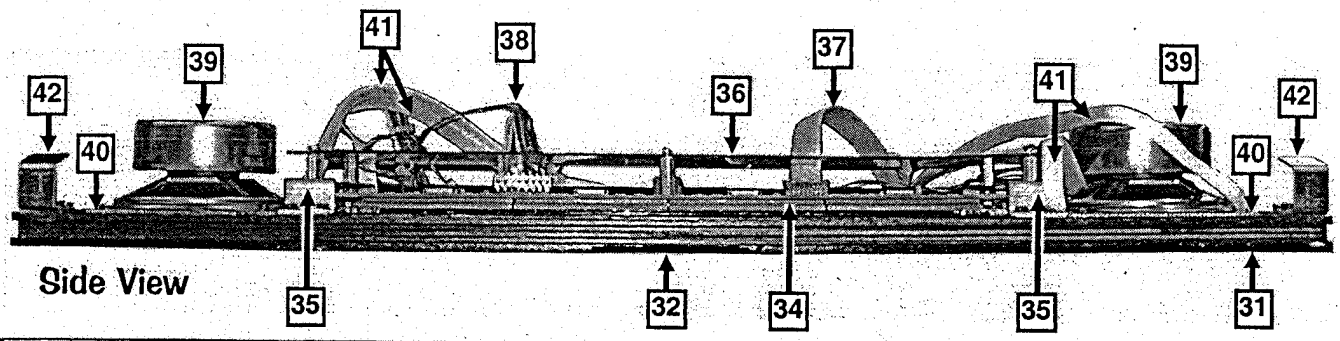

Nr.	BACKBOX PARTS	QTY.	SPI PART Nr.
	◄ *PARTS TABLE & VIEWS CONTINUED FROM THE PREVIOUS PAGE.*		
25	Braided Wire (1-1/2 Feet) **Item 25 is secured by:** Staple 5/16" (Qty. 23) (631-5000-00)	1	600-5001-00
26*	Zip Cable Tie (Screw Down Style) **Item 26 is secured @ inside bot. by:** #8 X 1/2" SHWH AB (Zinc) (Qty. 1/per) (234-5101-00)	4	040-5005-00
27	Clamps [Multiple Sizes] **Item 27 secured by:** #8 X 1/2" SHWH AB (Zinc) (Qty. 1/per) (234-5101-00) ***For the following sizes, replace -XX with:*** **.1/4"** Double = **-23** (Qty. 5); **1/2"** Single = **-06** (Qty. 3); **3/4"** Single = **-08** (Qty. 4); **1"** Single = **-09** (Qty. 1); **1-1/4"** Double = **-30** (Qty. 1)	27	040-5000-XX
28	Foam 3/16" Thick X 1/4" Wide X 12" **Above Item 28 is self-adhesive.** *17.5" strip on each side. Sold in 12" Lengths only.*	6	626-5026-00
29L	Pivot Hinge Red & Blue *(Left Style)*	1	535-7999-XX
29R	Pivot Hinge Red & Blue *(Right Style)* **Items 29L-29R are secured to Backbox by:** 1/4"-20 X 1-1/4" C.B. Sq. Neck (Qty. 4) (231-5003-00) **and** 1/4"-20 Flange Nut (Qty. 4) (240-5300-00) **Items 29L-29R are secured to Cabinet by:** Spacer Hex Nut 1/2" O.D. - 1/4-20 X 1/2" TD (Black) (Qty. 1/per) (254-5042-00), Nylon Spacer (Black) (Qty. 1/per) (242-5084-00), 1/4-20 X 1/2" Carriage Bolt Square Neck (Black) (Qty. 1/per) (231-5072-00) **and** Washer 1" O.D. X 1/2" I.D. X 1/16" (Black) (Qty. 1/per side, *only if required*) (242-5087-00)	1	535-7999-XX
30*	Memory Stick USB 1.1+ [Generic] 64MB		970-0064-00
	Memory Stick USB 1.1+ [Generic] 128MB *Item 30 was not included with your game. Read the inside cover or go on-line for more info.* To order with the latest game code copied onto it, add -A3 to the Part Nr. (970-0128-00-A3). File(s) can be downloaded from our website *(Files are 25MB or larger, DSL or Fast Modem recommended).* Not all manufacturers of Memory Sticks are compatible with our system. Test it out, if it doesn't work properly, return your purchase and order the memory stick through you local pinball distributor *(Stern Pinball Memory Sticks guaranteed compatible).*		970-0128-00

(ASM. REF. 505-6002-A3-A3, Items 1-42 Only, [29-30 not included in assembly])

Nr.	SPEAKER PANEL PARTS	QTY.	SPI PART Nr.
31	Speaker Panel (Black Wood)	1	525-5515-00
32	Plastic Shield (Display Front Cover) **Item 32 is secured to inside Item 31 by:** #6 X 3/8" SHWH AB (Zinc) (Qty. 8) (234-5000-00)	1	545-5884-00
33*	Foam 3/16" Thick X 1/4" Wide X 12" **Above Item 33 is self-adhesive.** *Located between Items 32-34. Sold in 12" Lengths only.*	6	626-5026-00
34	128 X 32 Led Dot Matrix Display PCB	1	520-5052-15
	// EURO ONLY RoHS // 128 X 32 DM CES PCB	1	520-5052-15
	// EURO ONLY RoHS // Dot Matrix Bezel **Item 34 is secured to Item 35 by** *(at corners)*: 3/16" X 3/8" Spacer Gray (Qty. 4) (254-5000-18) **and** #6-32 X 1/2" SHWH Swage (Serr) Zinc (Qty. 4) (237-5976-03)		545-6281-00
35	Dot Matrix Display Mounting Bracket **Item 35 is secured to Item 31 by:** #8 X 1/2" SHWH AB (Zinc) (Qty. 4/per) (234-5101-00)	2	535-8368-01
36	Plastic Shield (Display Back Cover) **Item 36 is secured to Item 34 by:** 1/2" X 1/4" Hex Spacer #6-32 Tap (Qty. 4) (254-5008-03); 3/4" X 1/4" Hex Spacer #6-32 Tap (Qty. 2) (254-5008-04), #6-32 X 1/4" PPH MS (Serrs) Zinc (Qty. 2) (232-5200-00) **and** #6-32 X 3/8" PPH (Qty. 6) (232-5201-00)	1	830-6040-00
37	Ribbon Cable, 14-Pin (33")	1	036-5260-33
	// EURO ONLY RoHS // LED Ribbon Cable Filter PCB ***Item 37 (14-Pin) connects the 128 X 32 Dot Matrix Display PCB to the CPU/Sound PCB.***		520-5259-00
38	Display Cable *(Wiring Harness)*	1	036-5454-01
	// EURO ONLY RoHS // LED Display Adapter Harness		036-5520-00
39	Speaker (Shld.) 4 x 4" 8Ω OHM MG ELE 4060SH	2	031-5004-02
40	Speaker Grill *(Chrome w/Artwork)* **Items 39-40 are secured by:** #8 X 1/2" SHWH AB (Black) (Qty. 4/per) (234-5101-01)	2	535-8081-04
41	Ground Strap (25") **[2 per : Items 35 & 39]**	4	600-5006-25
42	Speaker Panel Hook Bracket **Item 42 is secured by:** #8 X 1/2" SHWH AB (Zinc) (Qty. 2/per) (234-5101-00)	2	535-7009-02

Take Note:

* An asterisk (*) indicates item(s) are not noted in the pictorials.

Nr.	BACKGLASS PARTS	QTY.	SPI PART Nr.
i*	Glass (Tempered) 25.906" X 19.187" X .125"	1	660-5038-02
ii*	X-Men ™ Film Art (#D2)	1	830-52D2-00
iii*	Top Plastic Channel - 26"	1	545-5018-15

Nr.	BACKGLASS PARTS	QTY.	SPI PART Nr.
iv*	Bottom Plastic Lift Channel - 26"	1	545-6313-01
v*	Plastic Edging (Left/Right) - 18-1/8" **Items i-v are secured to Item i by:** 3M Tape (Double-Sided), 12" (Qty. 1) (626-5080-00) ***Note:*** *Only 6" required, sold in 12" lengths only.*	2	545-5018-14

(ASM. REF. 515-5450-00-A9 , Items i-v)

Parts Identification

Cabinet - Parts ■ & Switches □

For Backbox Parts see the previous two pages.

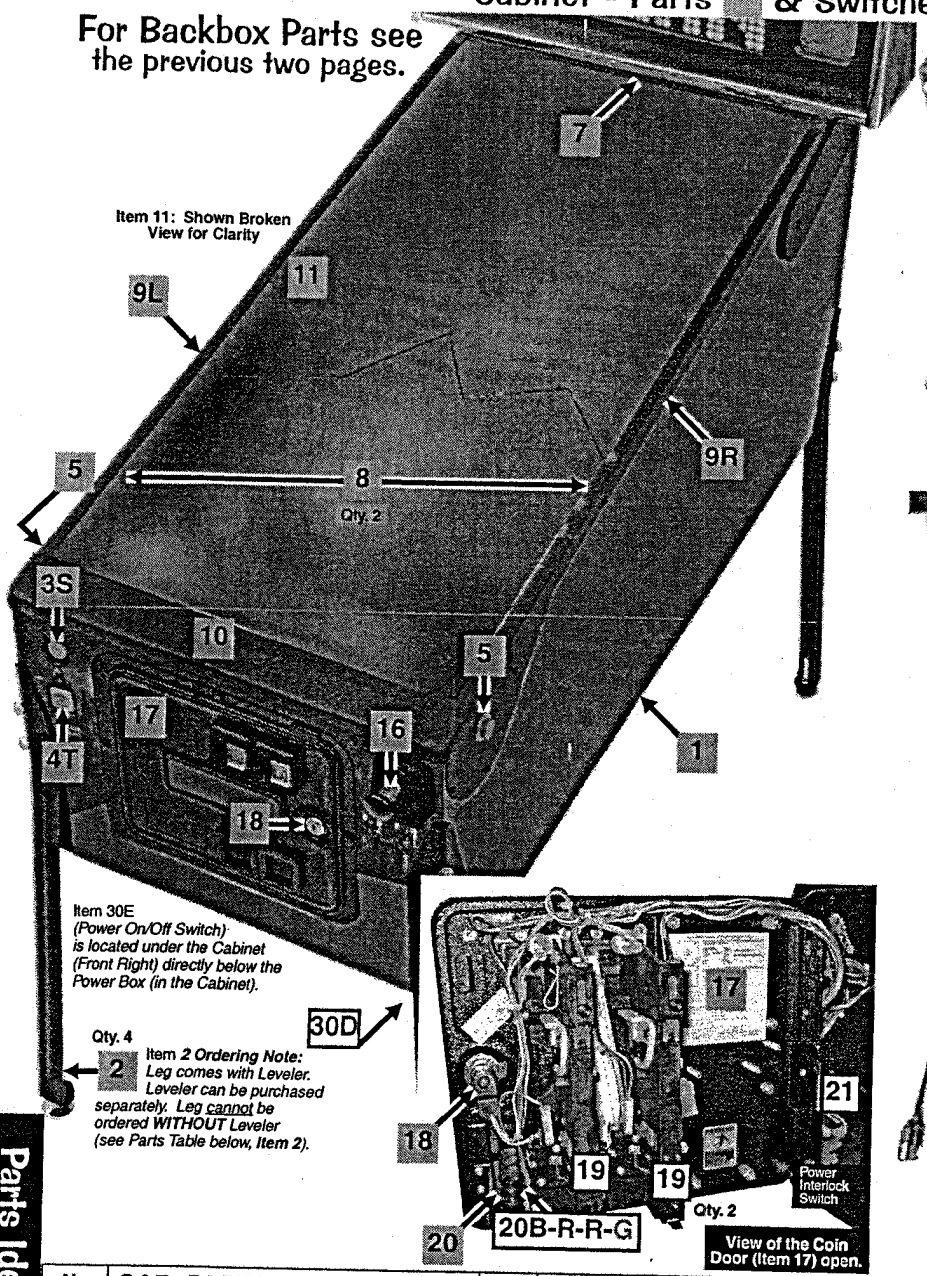

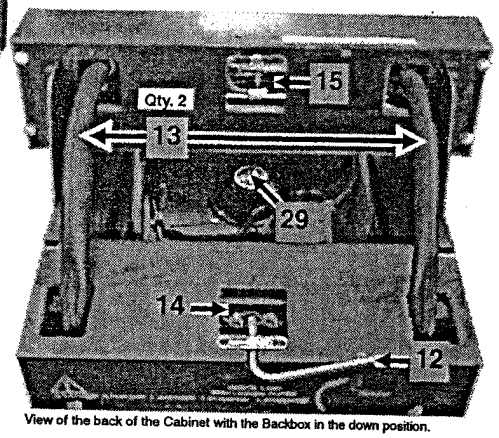

View of the back of the Cabinet with the Backbox in the down position.

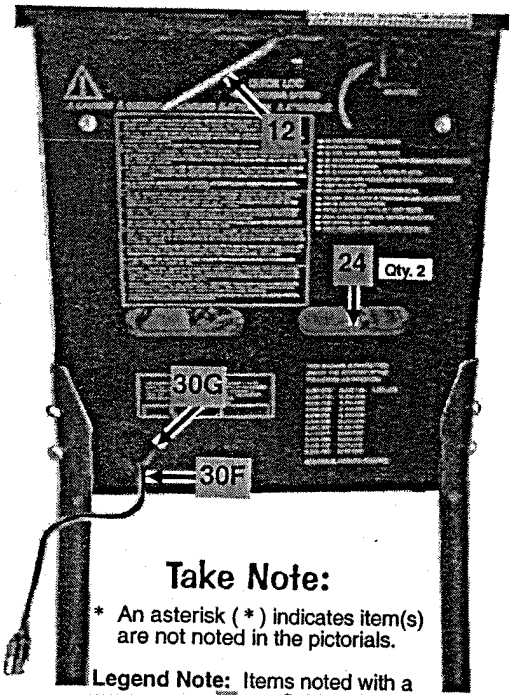

View of the Coin Door (Item 17) open.

Take Note:

* An asterisk (*) indicates item(s) are not noted in the pictorials.

Legend Note: Items noted with a cyan square ■ are Cabinet Parts. Items noted with a white square □ are Switches.

Parts Identification

Nr.	CAB. PARTS & SWITCHES	QTY.	SPI PART Nr.
1	Screened Cabinet X-MEN™ (No Parts)		525-5395-15P-D2
2	Red Leg with Leveler Asm. Blue leg with Leveler Asm.500-5921-06	1	500-5921-23
	Item 2 is secured by: Leg Bolt Back Plate (535-5703-00) and Leg Bolt 3/8" X 16 X 2-1/2" Hex 5/8" Hd. (2/per) (231-5001-01) *Leg Leveler ONLY (3/8"-16 X 3") (500-5017-00).*		
3S	Start Button (Green Round) with Sw. + Lamp	1	500-6388-44-LED
4T	Tournament Button (Yel. Sq.), w/Sw. + Lamp		500-6587-06-TL
	Item 3S & 4T includes the Switch & Lamp (No Wiring; desolder old wiring where required). Switch or Bulb replacement: ↻ TWIST ↻ LOCK (-TL) >> not snap-in << *Assembly Parts Included :* Microswitch (180-5174-00); #555 Wedge Base Clear Bulb (165-5002-00); *If 4T is not desired, use optional Button Plug Black (500-6566-00). Requires 3-Lug Terminal Strip (055-5204-03) and Diodes, 1N4004 (Qty. 2) (112-5003-00) inside cabinet under button(s) for Lamp Operation (Diode for Switch, located on Switch.)*		
5	Flipper Button (Blue& Yellow) Assy (No Sw.)	2	500-5026-XX
	Item 5 is secured by: Pal Nut for Flipper Button (Metal) (Qty 2/per) (240-5003-01) ***Pal Nut inside cabinet secured by:*** #8 X 1/2" SHWH AB (Zinc) (Qty. 1/per) (234-5101-00) and Washer (Zinc), .187" ID X .875" OD X .048" Thick (Qty. 1/per) (242-5059-00)		
6S	Flipper Switch Single Assembly	1	500-6889-01
	Assembly Parts Included : Flipper Switch Stack Single *(Paliney Contact)* (180-5160-01) and Capacitor - Ceramic .05 Mfd 25 volt (130-5001-00) **Item 6S/6D are secured to Cab. by:** #6 X 1-1/4 SHWH AB (Zinc) (Qty. 2/per) (237-5959-00)		
6D	Flipper Switch Double Assembly	1	500-6890-01
	Assembly Parts Included : Flipper Switch Stack Double *(Paliney Contact)* (180-5164-01) and Capacitor - Ceramic .05 Mfd 25 volt (130-5001-00) **Item 6S/6D are secured to Cab. by:** #6 X 1-1/4 SHWH AB (Zinc) (Qty. 2/per) (237-5959-00)		

Nr.	CAB. PARTS & SWITCHES	QTY.	SPI PART Nr.
7	Rear Glass Channel 20-3/8" Length	1	545-5038-00
8	Plastic Channel 42-5/8" Lg. (Left/Rt.)	2	545-5017-00
9L	Side Armor (Left) Red & Blue		535-7297-XX
9R	Side Armor (Right) Red & Blue		535-7297-XX
	Items 9L & 9R are secured @ front & side by: Pem Stud 1/4 X 1" Flange Head Black (Qty. 1/per) (237-6116-01), 1/4-20 Flange Nut (Qty. 1/per) (240-5300-00) and #8 X 1/2" T20 Tamper Proof Black (Qty 5/per) (237-6173-05); @ **rear (backbox) by:** #10-24 X 1" Sq. Neck Carrg. Bolt Black (Qty. 1/per) (231-5021-00) and #10-24 Hex Nut (Qty. 1/per) (240-5202-00)		
10	Front Molding (Red & Blue) < NO BUTTON HOLE >		515-7495-XX
	Item 10 includes: Self-Adhesive Foam Rubber 3/8" X 3/16" X 20-3/8" (3') (626-5001-00) ***Items 10 works with Item 22 (next page) ONLY.***		
11	Playfield Glass (Tempered) 21" X 43" X 3/16"	1	660-5001-00
12	Hex Key Allen Wrench 5/16"	1	777-0001-00
13	Corrugated Tubing Black 1" ø X 2.6' Lg.	1	605-5008-03
	Above Item 13 covers the Cable Wiring Harnesses going into the Backbox from the Cabinet.		
14	Roto Lock Male (R2-0055-02)	1	355-5006-01
	Item 14 is secured by: #10-24 X 1-3/4" Carriage Bolt Square Neck (Qty. 2) (231-5022-00), #10-24 Nylon Stop Nut (Qty. 2) (240-5206-00) **and** #10 Washer. 7/32" ID X 1/2" OD X 1/16" Thick (Qty. 2) (242-5003-00)		

Cabinet - Parts ■ & Switches □ Continued

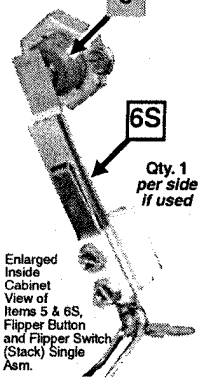

Enlarged Inside Cabinet View of Items 5 & 6S, Flipper Button and Flipper Switch (Stack) Single Asm.

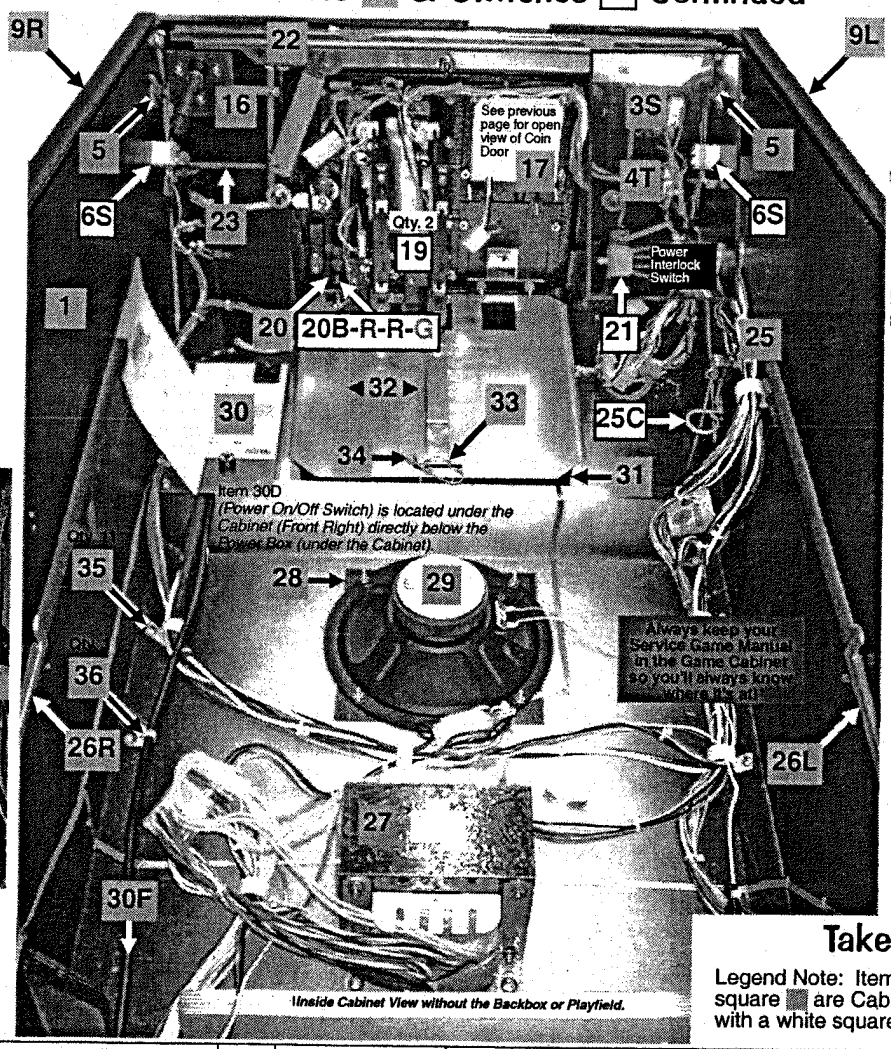

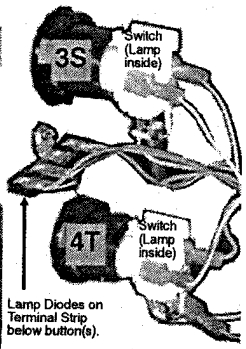

Lamp Diodes on Terminal Strip below button(s).

Enlarged Inside Cabinet View of Items 3S, 4T and 25 (25B, 25C, 25H & 25W), Plumb Bob Tilt Switch.

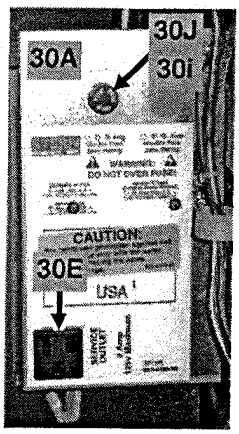

Enlarged Inside Cabinet View of Items 30, Power Box (30A), Service Outlet (30E), Fuse (30i) and Fuse Holder (30J).

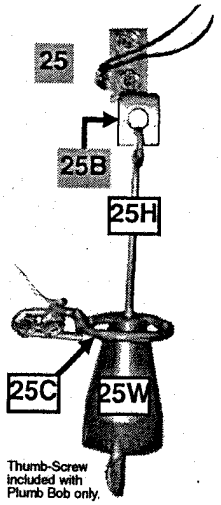

Thumb-Screw included with Plumb Bob only.

Take Note:

Legend Note: Items noted with a cyan square ■ are Cabinet Parts. Items noted with a white square □ are Switches.

Nr.	CAB. PARTS & SWITCHES	QTY.	SPI PART Nr.
	◀ *PARTS TABLE & VIEWS CONTINUED FROM THE PREVIOUS PAGE.*		
17	Coin Door 2-Cht $V Up-Stk 4-Button Bracket **Item 17 is secured by:** 1/4"-20 X 1-1/4" Carriage Bolt Square Neck (Qty. 4) (231-5003-00) 1/4"-20 Flange Nut (Qty. 4) (240-5300-00) and Fend Washer 1/4" I.D. X 1" O.D. (Qty. 3) (242-5009-00) *Note: For Coin Door other than USA call Technical Support for SPI Part Nr.*	1	501-5018-172
18	Lock 5/8" Barrel, 3/4, Flt. Cam	1	355-5055-00
19	Coin Door Switch (USA) (Happ) ALT. SW.: 19C: Coin Door Switch (USA) (Coin Control) (180-5024-00) ALT. SW.: 19J: Coin Door Switch (¥ Japan) (180-5091-00)	2	180-5024-01
20	4-Button Bracket *(for Service Menu Buttons)* SWITCH: 20B: Push-Button Service Switch (Black) (180-5192-00) SWITCH: 20R: Push-Button Service Switch (Red) (Qty. 2) (180-5192-02) SWITCH: 20G: Push-Button Service Switch ( ) (180-5192-04) *Ordering Note: Securing hardware for switches included. Decal in kit sold separately.*	1	535-6860-04
21	Power Interlock-Memory Protect Switch Asm. *Assembly Parts Included* : Mounting Bracket (535-9794-00), Power Interlock (Playfield) Switch (180-5136-00) and secured by: #8 X 1/2" SHWH AB (Zinc) (Qty. 2) (234-5101-00)		500-5808-05
22	Front Molding Lockdown Asm. **Item 22 is secured by:** #10-24 X 1-1/4" Carr. Bolt (Qty. 2) (231-5012-00) and #10-24 Keps Nut (Qty. 2) (240-5207-00)	1	500-6881-00
23	Lockdown Spring *(connected to handle)* **Item 23 is secured by:** #8 X 1/2" SHWH AB (Zinc) (Qty. 1) (234-5101-00) and #10 Washer, 7/32" ID X 1/2" OD X 1/16" Thick (Qty. 1) (242-5003-00)	1	265-5008-00
24	Grills 2-1/2" X 18" *(on Back & Bottom)*	3	545-5072-02
25	Plumb Bob Tilt Switch *Indivual Parts Only* SWITCH: 25B: Bracket for Hanger Wire (535-5221-00) 25C: Contact Wire Form (535-7563-01) 25H: Hanger Wire (535-5319-02) 25W: Plumb Bob Weight (535-5029-00) *(includes Thumb-Screw)* **Item 25B is secured to Cabinet by:** #6 X 5/8" SHWH AB (Zinc) (Qty. 4) (234-5002-00)		***Ind. Parts Only***
26L	Slide & Pivot Support Bracket (Left)	1	535-5989-00
26R	Slide & Pivot Support Bracket (Right)	1	535-5990-00
	Items 26L & 26R are secured by: #10-24 X 1-1/4" Carriage Bolt Square Neck Black (3/per) (231-5012-00) and #10-24 KEPS Nut (3/per) (240-5207-00)		

Nr.	CAB. PARTS & SWITCHES	QTY.	SPI PART Nr.
27	Transformer 5.7VAC *(with Ballast Winding)* **Item 27 is secured by:** 1/4"-20 X 5/8" PPH MS (Zinc) (Qty. 4) (237-5854-00) and 1/4" Split Lock Washer (Qty. 4) (244-5000-00)	1	010-5012-01
28	Woofer (Speaker) Grill 7" X 7"	1	545-5072-03
29	Woofer 8" ø Round 8010 4Ω **Items 28 & 29 are secured by:** #6-32 X 1-1/4" Fin Shank Screw (Qty. 4) (237-5883-00) and #6-32 Keps Nut (Qty. 4) (240-5008-00)	1	031-5007-01
30	Power Input Box Asm. + Univ. Cable 30A: Power Box *(No Parts)* Mounting Frame (535-5932-00) 30B*: Line Filter (150-5000-00) 30C*: Varistor* TNR159211KM (Domestic) (150-5001-00) *or* Varistor TRM15G431KM (Euro) (150-5002-00) SWITCH: 30D: On/Off Rocker Switch + Bracket Assembly (515-7085-00) *30D Incl.:* Switch, APEM R2101C5NBB (180-5001-03) + Bracket (535-8318-00) 30E: Service Outlet (3-Prong / US) (180-5008-01) / International N/A 30F: Line Cord 10' ROJ 3" + Ring Terminal Asm. (515-6566-00) 30G: Recessed (Black) Cup *(rear of Cabinet)* (545-5122-00) 30H*: Snap Bushing 9/16" (White) (280-5001-01) 30I: Fuse 8 Amp 250V Slo-Blo (Domestic) (200-5000-05) *or* Fuse 5 Amp 250V Slo-Blo (International) (Qty. 2) (200-5003-00) 30J: Fuse Holder (205-5001-00) *Universal Cable & Jumper Caps (all voltage variations). See the Yellow Pages, Page y.10.*	0	515-5360-08
31	Cash Box Plastic Bottom	1	545-5090-00
32	Cash Box Cover (Validator)	1	535-5013-03
33	Cash Box Lock Bracket (U-Wire) **Item 33 is secured by:** #8 X 5/8" HWH AB (Green) (Qty. 2) (234-5102-04)	1	535-7562-00
34	Large Hair-Pin Clip	1	535-7772-00
35	Clamps [Multiple Sizes] **Item 35 is secured to Item 1 by:** #8 X 1/2" SHWH AB (Zinc) (Qty. 1/per) (234-5101-00) *For following sizes, replace -XX with:* 3/4" Single = -08 (Qty. 9); 1-1/2" Single = -10 (Qty. 3)	30	040-5000-XX
36	Zip Cable Tie (Screw Down Style) **Item 36 is secured by:** #8 X 1/2" SHWH AB (Zinc) (Qty. 1/per) (234-5101-00)	4	040-5005-00
37†	Meter +12VDC *with Bracket Optional*	*opt.*	G-0053-013-102
	† *Meters (Diode included) are optional and were not included in this Pinball Machine. Order without the bracket use* ***G-0053-013-102A.*** *More information or Qs? Call Technical Support.*		

Parts Identification

PF BOTTOM

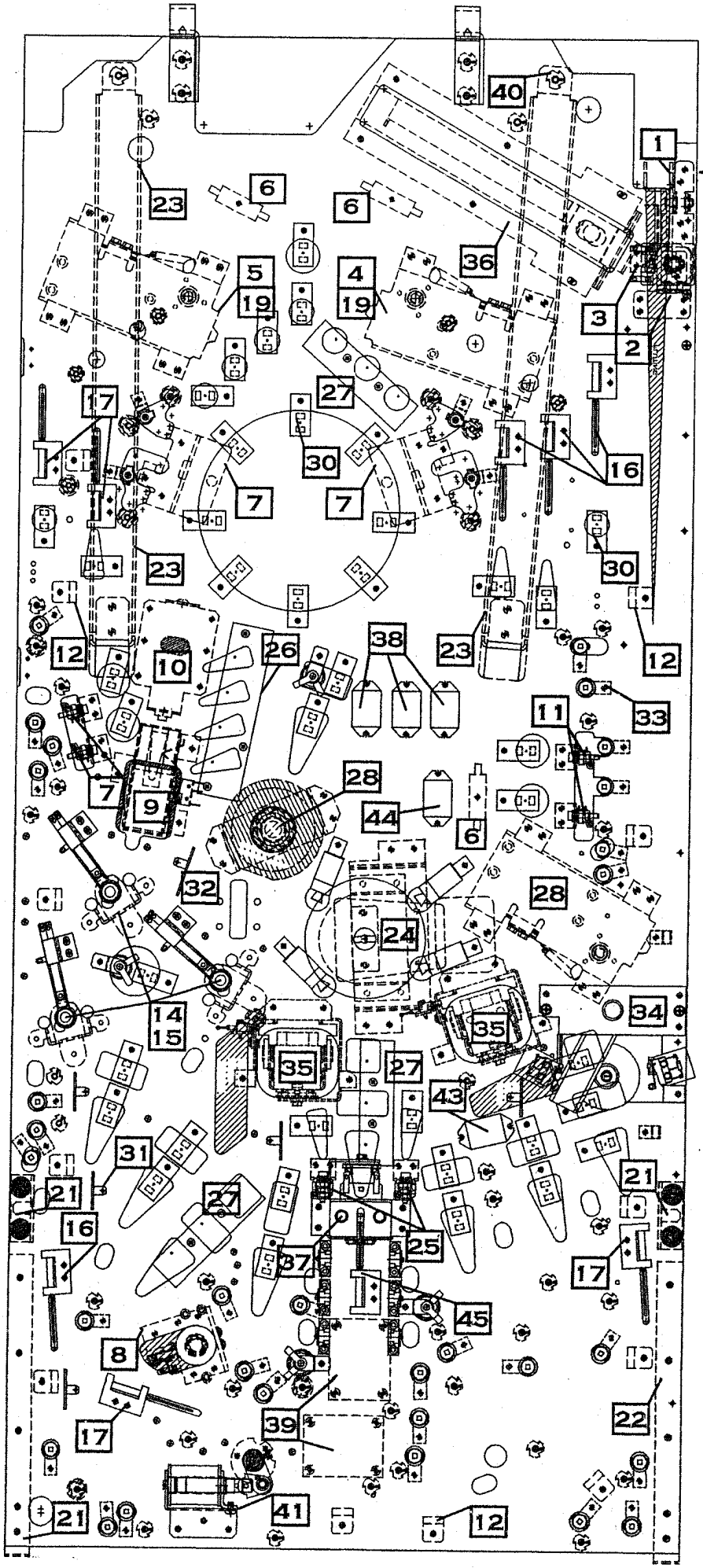

P10

MAIN PLAYFIELD PARTS (BOTTOM)

	PART NAME	PART NUMBER
1.)	AUTOPLUNGER ARM WELD ASSY	500-6091-00
2.)	AUTOPLUNGER ARM WELD ASSY	500-6092-02-ND
3.)	SHOOTER LANE SWITCH ASSY	500-6096-00
4.)	FLIPPER ASSY (LEFT)	500-6543-12-ND
5.)	FLIPPER ASSY (RIGHT)	500-6543-02-ND
6.)	FUSE CLIP HOLDER SOCKET	205-5000-01
7.)	SLINGSHOT ASSY	500-5849-01-ND
8.)	VERTICLE UP KICKER ASSY	500-7078-01
9.)	POWER SCOOP ASSY	500-5809-01
10.)	KICK BIG ASSY (POWER SCOOP)	500-6398-01
11.)	STAND UP TARGET 1 1/2	500-5321-08
12.)	TIE POST	545-5253-01
13.)	MAGNETIC DISC ASSY	500-7234-01
14.)	POP BUMPER BOTTOM ASSY	515-6459-04-ND
15.)	POP BUMPER SWITCH ASSY	515-6459-09
16.)	ROLLOVER SWITCH ASSY (LEFT)	500-6227-03
17.)	ROLLOVER SWITCH ASSY (RIGHT)	500-6227-04
18.)	STANDUP TARGET ASSY 1" SQUARE	500-6984-08
19.)	FLIPPER BASE INSULATOR	545-5721-00
20.)	6-32 T-NUT	240-5002-00
21.)	PIVOT SLIDE BRACKET ASSY	500-5329-03
22.)	EDGE SLIDE BRACKET	535-5988-01
23.)	PLAYFIELD SUPPORT SLIDE BRACKET	535-6862-05
24.)	MAGNETIC SPINNING DISC ASSY	500-7234-01
25.)	STANDUP TARGET ASSY 1/2"	500-6985-04
26.)	LED LAMP PCB MOTHER BOARD (AT SCOOP)	520-6779-03
27.)	LED LAMP PCB	520-6779-01
28.)	FLIPPER ASSY (UPPER)	500-6543-22-ND
29.)	MAGNET ASSY	516-0018-00
30.)	LED MAP PCB (SINGLE)	520-5307-00
31.)	TERMINAL STRIP (2 POSITION)	055-5203-00
32.)	TERMINAL STRIP (3 POSITION)	055-5204-03
33.)	SOCKET WEDGE BASE GI	077-5030-00
34.)	ICEMAN DRIVE ASSY	500-7259-00
35.)	NIGHTCRAWLER LIFT ASSY	500-7256-00
36.)	4 BALL TROUGH ASLSY	500-6318-14-ND
37.)	DOUBLE UP POST ASSY	511-6770-00
38.)	RELAY ASSY	511-7226-00
39.)	OPTO SWITCH PCB	520-5239-01
40.)	8-32 T-NUT	240-5101-00
41.)	DIVERT COIL & BRACKET ASSY	500-2456-00
42.)	CRANK ARM & PLUNGER ASSY	500-7245-00
43.)	RELAY (DC MOTOR) (ICEMAN RAMP DRIVE)	511-7234-00
44.)	RELAY (AC MOTOR) (SPINNING DISC DRIVE)	511-5249-01
45.)	ROLLOVER SWITCH ASSY (RIGHT)	500-6227-04A

Playfield - Rubber Parts Black ■, White □ & Blue ■ (Rings Actual Size) †

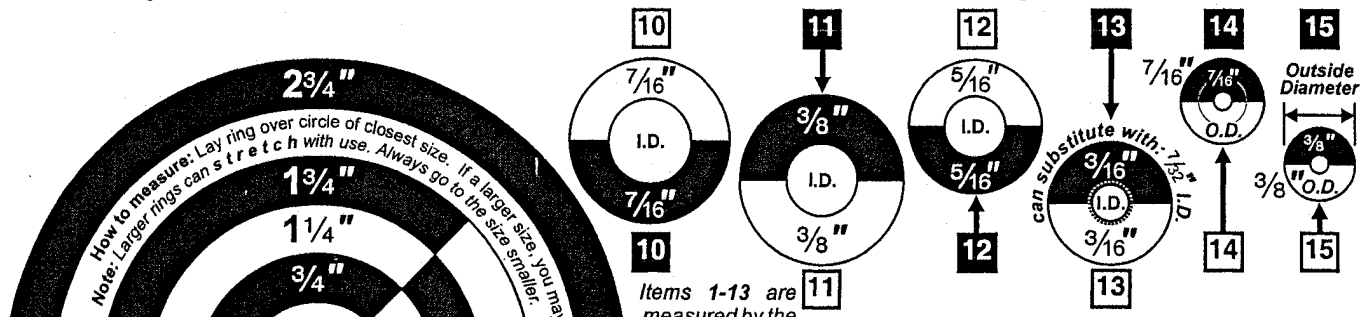

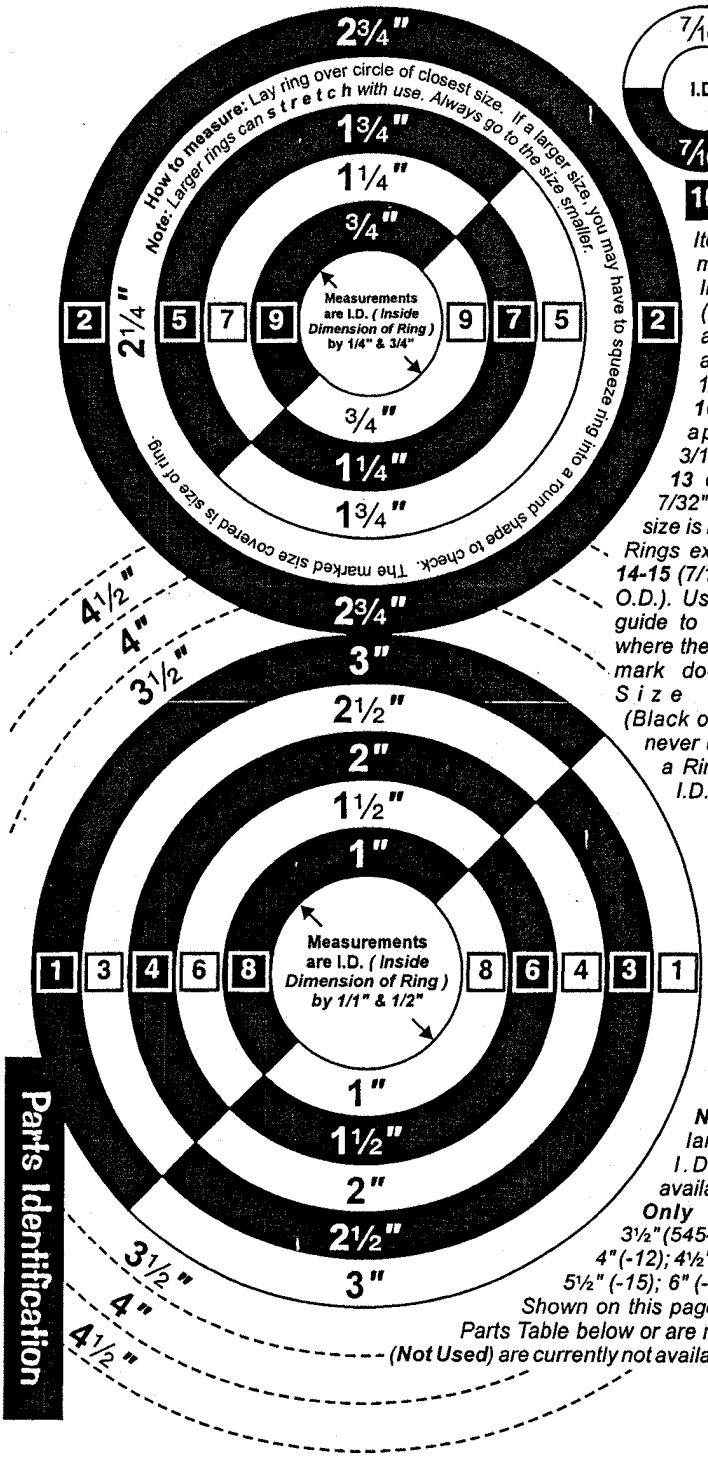

*Items **1-13** are measured by the Inside Diameter (I.D.). Items **1-9** and **11** are approximately 1/4" thick. Items **10, 12-15** are approximately 3/16" thick. Item **13** can also be a 7/32" I.D Ring. The size is imprinted on all Rings except for Items **14-15** (7/16" O.D. & 3/8" O.D.). Use this page as a guide to measure rings where the size imprint or mark does not exist. Size 2¼" I.D. (Black or White) was never used. Choose a Ring Size +/- ¼" I.D. if required.*

***Note:** Sizes larger than 3" I.D. currently available in **Black Only (Not Used)**: 3½"(545-5348-11); 4"(-12); 4½"(-13); 5"(-14); 5½"(-15); 6"(-16). Sizes Not Shown on this page, listed in the Parts Table below or are noted with **N/U** **(Not Used)** are currently not available.*

Nr.	RUBBER RINGS	QTY.	SPI PART Nr.
1	3" I.D. Rubber Ring **BLACK**	1	545-5348-10
	3" I.D. Rubber Ring **WHITE**		545-5348-60
2	2¾" I.D. Rubber Ring **BLK**	2	545-5348-20
	2¾" I.D. Rubber Ring **WHT**	N/U	545-5348-70
3	2½" I.D. Rubber Ring **BLK**	2	545-5348-09
	2½" I.D. Rubber Ring **WHT**		545-5348-59
4	2" I.D. Rubber Ring **BLACK**	2	545-5348-08
	2" I.D. Rubber Ring **WHITE**		545-5348-58
5	1¾" I.D. Rubber Ring **BLK**		545-5348-21
	1¾" I.D. Rubber Ring **WHT**	N/U	545-5348-71
6	1½" I.D. Rubber Ring **BLK**	1	545-5348-07-40
	1½" I.D. Rubber Ring **WHT**		545-5348-57
7	1¼" I.D. Rubber Ring **BLK**	2	545-5348-06
	1¼" I.D. Rubber Ring **WHT**		545-5348-56
8	1" I.D. Rubber Ring **BLACK**	1	545-5348-05-40
	1" I.D. Rubber Ring **WHITE**		545-5348-55
9	¾" I.D. Rubber Ring **BLACK**	3	545-5348-04-40
	¾" I.D. Rubber Ring **WHITE**		545-5348-54
10	7/16" I.D. Rubber Ring **BLK**		545-5348-18
	7/16" I.D. Rubber Ring **WHT**		545-5348-68
11	⅜" I.D. Rubber Ring **BLACK**		545-5348-03
	⅜" I.D. Rubber Ring **WHITE**	N/U	545-5348-53
12	5/16" I.D. Rubber Ring **BLK**		545-5348-02
	5/16" I.D. Rubber Ring **WHT**		545-5348-52
13	3/16" I.D. Rubber Ring **BLK**	4	545-5348-01-40
	3/16" I.D. Rubber Ring **WHT**		545-5348-51
14	7/16" O.D. Rubber Ring **BLK**	10	545-5348-17-40
	7/16" O.D. Rubber Ring **WHT**		545-5348-67
	Note: Item 14, 7/16" O.D. Black Rings (Qty. 44 of 49) are used to cusion the Bayonet Sockets under the playfield (between bracket & playfield).		
15	⅜" O.D. Rubber Ring **BLK**		545-5348-19
	⅜" O.D. Rubber Ring **WHT**		545-5348-69
16	Small Flipper **BLACK** Ring *(Soft Duro)*		545-5207-00
	Small Flipper **RED** Ring *(Soft Duro)*		545-5207-22
17	Large Flipper **BLACK** Ring *(50 Duro)*	3	545-5277-00
	Large Flipper **YELLOW** Ring *(50 Duro) (use -06 40 Duro)*		545-5277-04
	Large Flipper **WHITE** Ring *(50 Duro)*		545-5277-08
	Large Flipper **RED** Ring *(Soft Duro)*		545-5277-22

Take Note:

For Blue Rubber Pads, see the next page and/or the Blue Pages for the assembly the pads are found on for the part number.

Nr.	RUBBER BUMPER PADS	QTY.	SPI PART Nr.
A*	Bumper **BLK** Pad (Lg. w/ grommet)	3	545-5428-00
	Item A are located on Flipper Assemblies. See next page for location.		
B*	Bumper **BLK** Pad (Sm. w/ grommet)	4	545-5105-00
	Item B are located on multiple assemblies. See next page for location.		

Nr.	RBR. BUMPER POST SLVS.	QTY.	SPI PART Nr.
D*	Bumper **BLACK** Post Sleeve (Tall)		545-5308-65
	Item D in RED use 545-5308-22; Item D in WHITE use 545-5308-08.		
E*	Bumper Post Sleeve (Short)		545-5151-00

Parts Identification

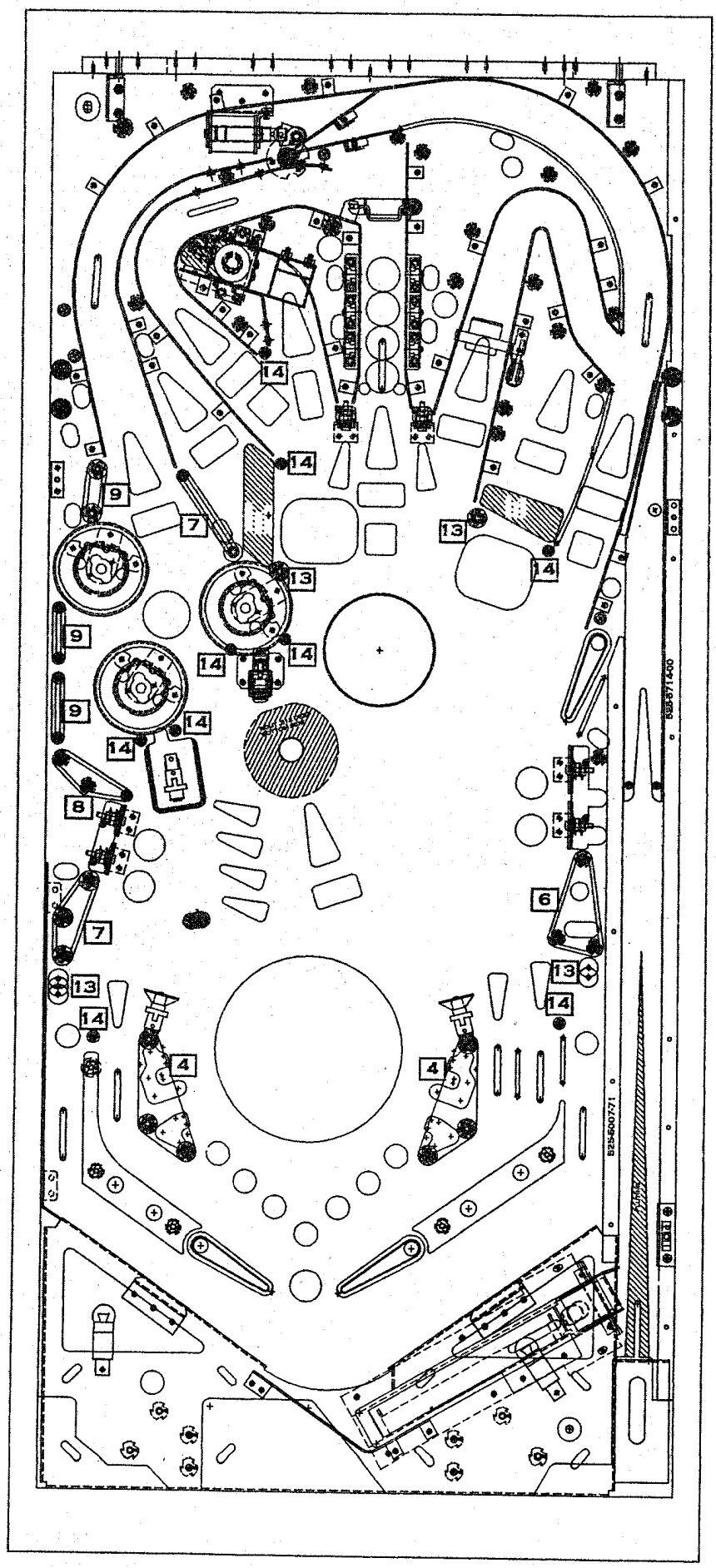

D13

Playfield - Metal Posts & Fin Shank Screws (Actual Size) †

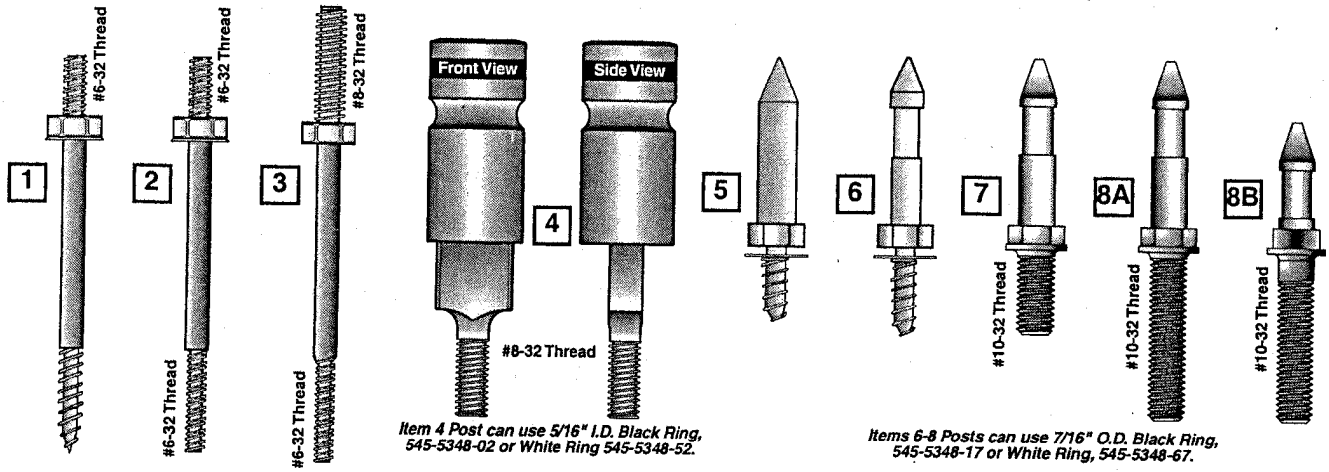

Item 4 Post can use 5/16" I.D. Black Ring, 545-5348-02 or White Ring 545-5348-52.

Items 6-8 Posts can use 7/16" O.D. Black Ring, 545-5348-17 or White Ring, 545-5348-67.

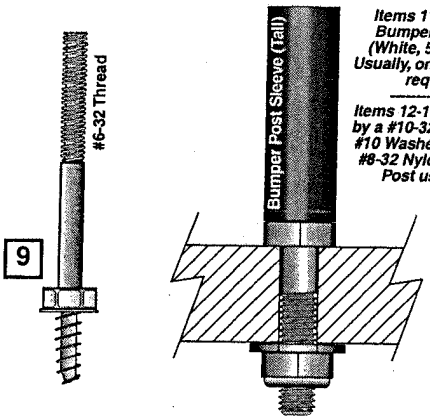

Items 11-16 & 18 Posts can use a Black Bumper Post Sleeve (Tall), 545-5308-00 (White, 545-5308-08 or Red, 545-5308-22) Usually, only Posts which are in the ball path require a Bumper Post Sleeve.

Items 12-15 & 18 Posts are typically secured by a #10-32 Nylon Stop Nut, 240-5203-00 and #10 Washer, 242-5010-00 (Item 11 Post use a #8-32 Nylon Stop Nut, 240-5102-00; Item 16 Post use a #8-32 T-Nut, 240-5101-00).

A & B *Items A & B Note: Typically used to secure Hex Spacers onto the Playfield Wood or Back Panel.*

C *Item C Note: Quantity 4 on bottom Cabinet Speaker Grill (Qty. 4) (also requires #6-32 Nylon Stop Nut, 240-5005-00).*

D *Item D Note: Quantity 3/per on the Coil Bracket Welded Assembly (515-5939-00) in the Bumper Bottom Assembly (515-6459-04).*

A - D *Items A-D Note: The "Fins" keep the screw from turning inside the wood hole.*

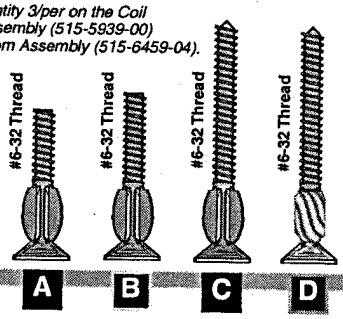

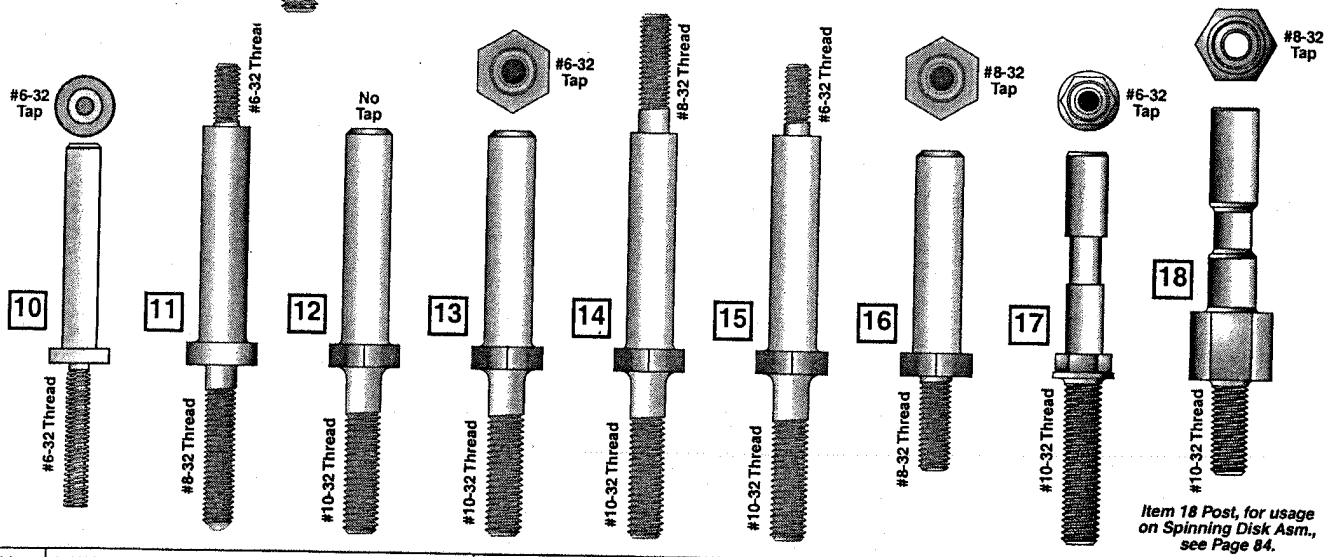

Item 18 Post, for usage on Spinning Disk Asm., see Page 84.

Nr.	METAL POSTS	SPI PART Nr.
1	Post [Fasten] #6-32 Thread // Wood Screw	530-5010-02
2	Post [Fasten] #6-32 Thread // #6-32 Thread	530-5012-02
3	Post [Fasten] #8-32 Thread // #6-32 Thread	530-5008-00
4	Post Brass [Adjustable, Sliding] #8-32 Thread	530-5621-00
5	Mini-Post Wood Screw (no cut-away)	530-5004-01
6	Mini-Post Wood Screw	530-5004-00
7	Mini-Post Machine Scr. // #10-32 .4" Thread	530-5005-01
8A	Mini-Post MS // #10-32 .875" Thread	530-5005-00
8B	Mini-Post Short MS // #10-32 .875" Thread	530-5749-00
9	Post [Fasten] #6-32 Thread // Wood Screw	530-5263-01
10	Post #6-32 Tap // #6-32 Thread	530-5127-00
11	Post [Fasten] #6-32 Thread // #8-32 Thread	530-5007-00
12	Post [Hex Base] NO TAP // 10-32 Thread	530-5332-00
13	Post [Hex Bs.] #6-32 TAP // #10-32 Thread	530-5332-01
14	Post [Hex Bs.] #8-32 Thread // #10-32 Thr.	530-5332-02
15	Post [Hex Bs.] #6-32 Thread // #10-32 Thr.	530-5332-03
16	Post [Hex Bs.] #8-32 TAP // #8-32 Thread	530-5332-04
17	Post [Hex Bs.+Groove] #6-32 TAP // #10-32 Thr.	530-5679-00
18	Post [Hex Bs.+Groove] #8-32 TAP // #10-32 Thr.	530-5753-00

Nr.	FIN SHANK SCREWS	SPI PART Nr.
A	#6-32 X 3/4" Fin Shank Screw	237-5921-02
B	#6-32 X 7/8" Fin Shank Screw	237-5921-04
C	#6-32 X 1¼" Fin Shank Screw	237-5883-00
D	#6-32 X 13/16" Spiral Fin Shank Screw	237-5957-00

NOT ALL PARTS LISTED ABOVE ARE USED ON THIS GAME (QUANTITIES PER GAME WILL DIFFER). COMPARE ACTUAL PART ON GAME TO ABOVE DRAWINGS TO IDENTIFY THE PART NUMBER REQUIRED.

Playfield - Nylon Stop, KEPS, Hex, T-, Flange, Pal* & Wing Nuts* (Actual Size) †

Nr.	NYLON STOP NUTS*	SPI PART Nr.
N1	#6-32 Nylon Stop Nut	240-5005-00
N2	#6-32 N.S. Nut *(with 1/4" Hex Body)*	240-5010-00
N3	#8-32 Nylon Stop Nut	240-5102-00
N4	#10-32 Nylon Stop Nut	240-5203-00
N5	#10-24 Nylon Stop Nut	240-5206-00
	Item N5 used with #10-24 X 1-3/4" Carriage Bolt Square Neck Black (231-5022-00) located in the Cabinet for the Roto Lock (Male) (355-5006-01).	
N6	#4-40 Nylon Stop Nut	240-5303-00
N7	#4-40 *(18/8 Stainless)* Nylon Stop Nut	240-5303-01
N8	5/16"-18 Nylon Stop Nut	240-5316-00

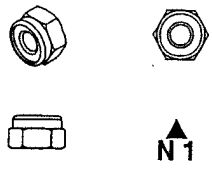

Nr.	KEPS NUTS*	SPI PART Nr.
K1	#6-32 Keps Nut *(with Star Washer)*	240-5008-00
K2	#6-32 Keps Nut *(with 1/4" Hex Body)*	240-5011-00
K3	#8-32 Keps Nut	240-5104-00
K4	#10-32 Keps Nut	240-5208-00
K5	#10-24 Keps Nut	240-5207-00
K6	#4-40 Keps Nut	240-5318-00

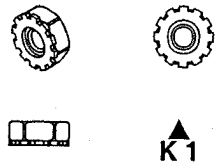

Nr.	HEX NUTS*	SPI PART Nr.
H1	#6-32 Hex Nut *(No Star Washer)*	240-5004-00
H2	#8-32 Hex Nut	240-5103-00
H3	#10-32 Hex Nut	240-5201-00
H4	#10-24 Hex Nut	240-5202-00
	Item H4 used with #10-24 X 1" Carriage Bolt Square Neck Black (231-5021-00) located in the Cabinet for the Side Armor Rear (towards Backbox).	
H5	#10-32 X 3/8" Hex Nut	240-5209-00
H6	3/4-16 Hex Nut	240-5315-00
H7	#2-56 Hex Nut	240-5301-00
H8	7/8"-14 Hex Nut	240-5317-00

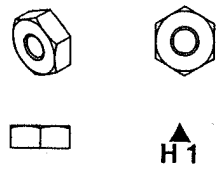

Nr.	T-NUTS*	SPI PART Nr.
T1	#6-32 T-Nut	240-5002-00
T2	#6-32 T-Nut *(with Side Cut Off)*	240-5002-01
T3	#8-32 T-Nut	240-5101-00
T4	#10-32 *(Black Oxide)* T-Nut	240-5007-00
T5	#10-32 T-Nut *(with Side Cut Off)*	240-5205-00
T6	#10-32 X 5/16" 3-Prong T-Nut	240-5204-00
T7	#10-24 T-Nut	240-5200-00

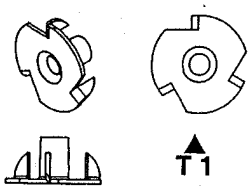

Nr.	FLANGE NUT*	SPI PART Nr.
F1	1/4" X 20 Flange Nut	240-5300-00
	Item F1 used with 1/4-20 X 1-1/4 Sq. Neck Carriage Bolt Black (231-5003-00) located in the Cabinet for the Side Armor (Front) and Pivot Hinges.	

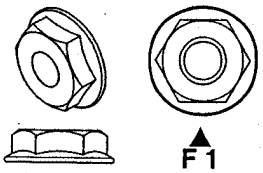

Nr.	PAL NUTS*	SPI PART Nr.
P1	Plastic Pal Nut *(on Flipper Buttons)*	240-5003-00
P2	Metal Pal Nut *(on Flipper Buttons)*	240-5003-01

* *Not Shown*

Nr.	WING NUTS*	SPI PART Nr.
W1	#6-32 Wing Nut	240-5001-00
W2	#8-32 Wing Nut	240-5100-00
W3	#10-24 Wing Nut	240-5211-00
W4	1/4"-20 Wing Nut	240-5302-00
W5	1/4"-20 Toggle Wing	240-5324-00

* *Not Shown*

NOT ALL PARTS LISTED ABOVE ARE USED ON THIS GAME (QUANTITIES PER GAME WILL DIFFER). COMPARE ACTUAL PART ON GAME TO ABOVE DRAWINGS TO IDENTIFY THE PART NUMBER REQUIRED.

Playfield Top - Hex Spacers ☐ (Actual Size) †

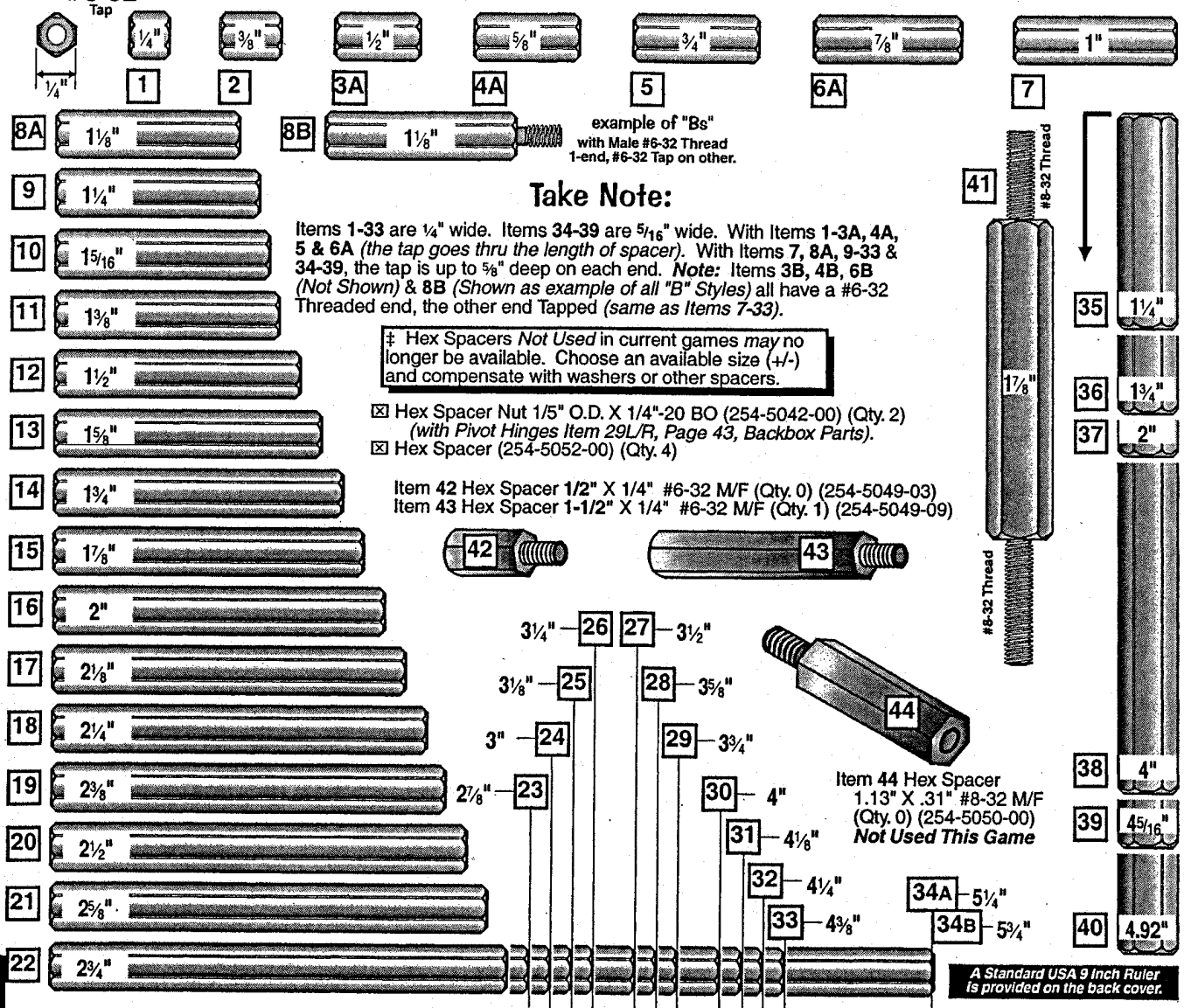

Take Note:

Items **1-33** are ¼" wide. Items **34-39** are 5/16" wide. With Items **1-3A, 4A, 5 & 6A** *(the tap goes thru the length of spacer).* With Items **7, 8A, 9-33 & 34-39**, the tap is up to ⅝" deep on each end. ***Note:*** Items **3B, 4B, 6B** *(Not Shown)* & **8B** *(Shown as example of all "B" Styles)* all have a #6-32 Threaded end, the other end Tapped *(same as Items 7-33).*

‡ Hex Spacers *Not Used* in current games *may* no longer be available. Choose an available size (+/-) and compensate with washers or other spacers.

☒ Hex Spacer Nut 1/5" O.D. X 1/4"-20 BO (254-5042-00) (Qty. 2) *(with Pivot Hinges Item 29L/R, Page 43, Backbox Parts).*
☒ Hex Spacer (254-5052-00) (Qty. 4)

Item **42** Hex Spacer **1/2"** X 1/4" #6-32 M/F (Qty. 0) (254-5049-03)
Item **43** Hex Spacer **1-1/2"** X 1/4" #6-32 M/F (Qty. 1) (254-5049-09)

Item **44** Hex Spacer 1.13" X .31" #8-32 M/F (Qty. 0) (254-5050-00) ***Not Used This Game***

A Standard USA 9 Inch Ruler is provided on the back cover.

Nr.	HEX SPACERS	QTY.	SPI PART Nr.
1	¼" X ¼" : #6-32 Tap *(both ends)*		254-5008-00
2	⅜" X ¼" : #6-32 Tap *(both ends)*		254-5008-12
3A	½" X ¼" : #6-32 Tap *(both ends)*		254-5008-03
3B*	Identical to **3A** *with #6-32 Thread end*		254-5024-03
4A	⅝" X ¼" : #6-32 Tap *(both ends)*		254-5008-02
4B*	Identical to **4A** *with #6-32 Thread end*		254-5024-02
5	¾" X ¼" : #6-32 Tap *(both ends)*		254-5008-04
6A	⅞" X ¼" : #6-32 Tap *(both ends)*		254-5008-05
6B*	Identical to 6A *with #6-32 Thread end*		254-5024-05
7	1" X ¼" : #6-32 Tap *(both ends)*		254-5008-06
8A	1 1/8" X ¼" : #6-32 Tap *(both ends)*		254-5008-17
8B	Identical to 8A *with #6-32 Thread end*		254-5024-17
9	1 1/4" X ¼" : #6-32 Tap *(both ends)*		254-5008-11
10	1 5/16" X ¼" : #6-32 Tap *(both ends)*		254-5008-34
11 ‡	1 3/8" X ¼" : #6-32 Tap *(both ends)*		254-5008-33
12	1 1/2" X ¼" : #6-32 Tap *(both ends)*		254-5008-09
13 ‡	1 5/8" X ¼" : #6-32 Tap *(both ends)*		254-5008-13
14	1 3/4" X ¼" : #6-32 Tap *(both ends)*		254-5008-10
15 ‡	1 7/8" X ¼" : #6-32 Tap *(both ends)*		254-5008-20
16	2" X ¼" : #6-32 Tap *(both ends)*		254-5008-07
17	2 1/8" X ¼" : #6-32 Tap *(both ends)*		254-5008-32
18	2 1/4" X ¼" : #6-32 Tap *(both ends)*		254-5008-18
19	2 3/8" X ¼" : #6-32 Tap *(both ends)*		254-5008-28

Nr.	HEX SPACERS	QTY.	SPI PART Nr.
20	2 1/2" X ¼" : #6-32 Tap *(both ends)*		254-5008-16
21	2 5/8" X ¼" : #6-32 Tap *(both ends)*		254-5008-08
22	2 3/4" X ¼" : #6-32 Tap *(both ends)*		254-5008-15
23	2 7/8" X ¼" : #6-32 Tap *(both ends)*		254-5008-31
24	3" X ¼" : #6-32 Tap *(both ends)*		254-5008-14
25	3 1/8" X ¼" : #6-32 Tap *(both ends)*		254-5008-19
26	3 1/4" X ¼" : #6-32 Tap *(both ends)*		254-5008-26
27	3 1/2" X ¼" : #6-32 Tap *(both ends)*		254-5008-27
28	3 5/8" X ¼" : #6-32 Tap *(both ends)*		254-5008-25
29	3 3/4" X ¼" : #6-32 Tap *(both ends)*		254-5008-36
30	4" X ¼" : #6-32 Tap *(both ends)*		254-5008-21
31	4 1/8" X ¼" : #6-32 Tap *(both ends)*		254-5008-23
32	4 1/4" X ¼" : #6-32 Tap *(both ends)*		254-5008-30
33	4 3/8" X ¼" : #6-32 Tap *(both ends)*		254-5008-29
34A	5 1/4" X ¼" : #6-32 Tap *(both ends)*		254-5008-35
34B	5 3/4" X ¼" : #6-32 Tap *(both ends)*		254-5008-38
35	1 1/4" X 5/16" : #6-32 Tap *(both ends)*		254-5018-09
36	1 3/4" X 5/16" : #6-32 Tap *(both ends)*		254-5018-06
37	2" X 5/16" : #6-32 Tap *(both ends)*		254-5018-07
38	4" X 5/16" : #6-32 Tap *(both ends)*		254-5018-03
39	4 5/16" X 5/16" : #6-32 Tap *(both ends)*		254-5018-00
40	4.92" X 5/16" : #6-32 Tap *(both ends)*		254-5018-04
41	1 7/8" X ⅜" : #8-32 *Thread (both ends)*		530-5285-00

† *The item type (size / description), the quantity and/or location used, are subject to change without notice. Service Bulletins will announce any changes, if warranted.*

Playfield Top - Plastic Posts & Spacers & Metal Spacers (Actual Size) †

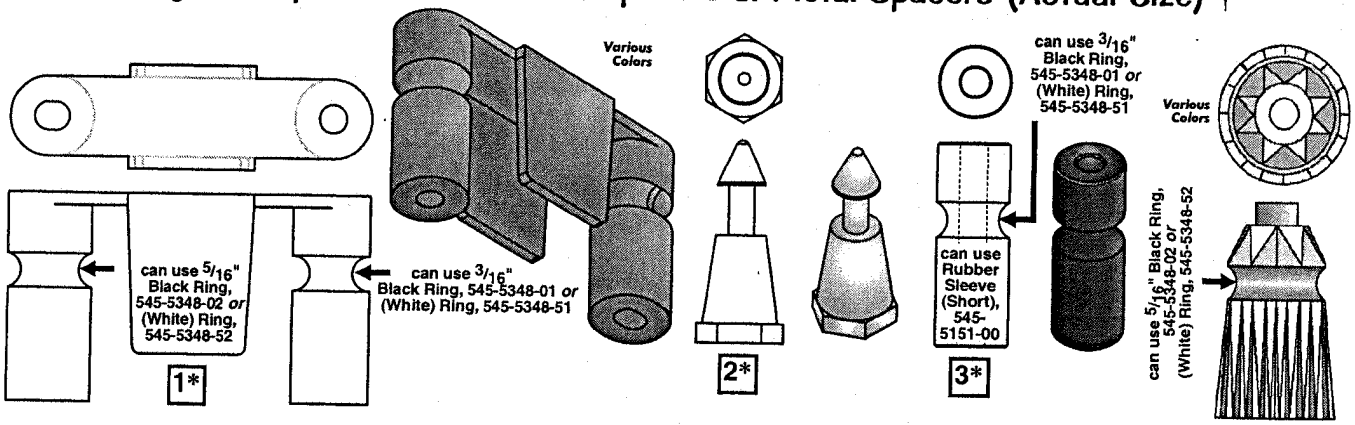

PLASTIC PART COLOR CHART

Nr.	Color	Nr.	Color	Nr.	Color
-00	Black	-06	Yellow	-12	Fluor. Blue
-01	Clear	-07	Orange	-13	Teal Green
-02	Red	-08	(White)	-14	(Gray)
-03	Amber	-09	Purple	-15	Luminescent
-04	Green	-10	Fluor. Org.	-16	Gold
-05	Blue	-11	Fluor. Green		

* Items **1** & **5** come in various colors. *The "-XX" (the last 2-Digits in the Part Number),* should be replaced with the desired 2-Digit number from the above Color Chart *(may not be available in every color; other colors used in prior games may no longer be available.) Call for availability.*

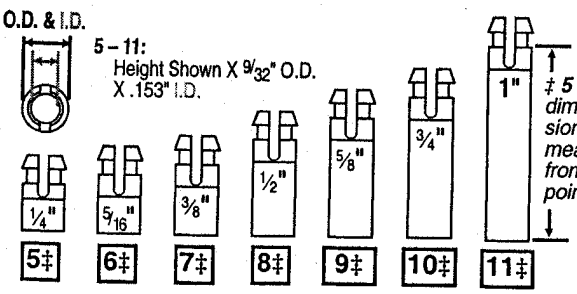

‡ *Items **5** through **11** dimensions are measured from bottom to just under the cut-away. Item **33** dimension is measured from top-to-top of curve. See pictorials with Items **11** & **33**.*

‡ *5 – 11 dimension is measured from this point.*

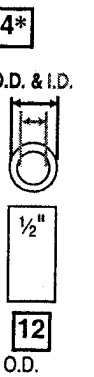

12: 1/2 X 1/4" O.D. X .147" I.D.

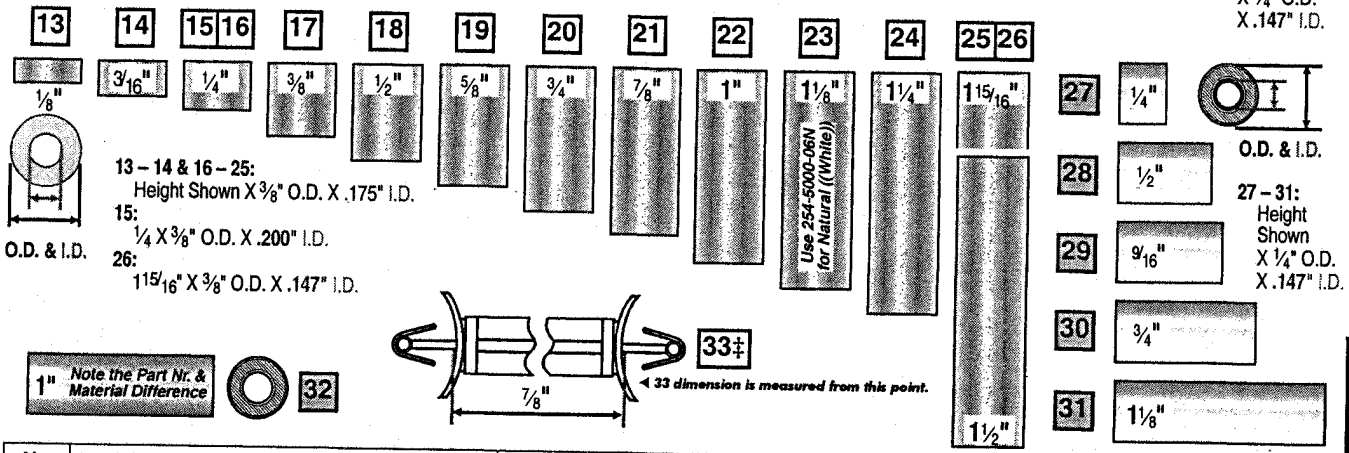

Nr.	PLASTIC POSTS & SPACERS	SPI PART Nr.
1**	Top Lane Plastic Mini-Lite Hood (XX-Color)	550-5061-XX
2**	Mini-Jewel Plastic Post (XX-Color)	550-5052-XX
3**	1 1/16" 1-Groove Plastic Post (XX-Color)	550-5059-XX
	Item 3 Only : Use Part Number (550-5059-00) for color Black.	
4**	1-Groove Jewel Plastic Post (XX-Color)	550-5034-XX
	Items 3 & 4 typically sec'd by: Post Fastening Scr. #6-32 Top / #6-32 Bot. (530-5012-02). *Use Color Chart above for last 2-digits. Not all colors are available.*	
	Items 1–4 Note: Use Color Chart above for last 2-digits. Not all colors are available.	
5 ‡	1/4" Self Retain. Plastic Spacer (White)	254-5007-02
6 ‡	9/16" Self Retain. Plastic Spacer (White)	254-5007-05
7 ‡	3/8" Self Retain. Plastic Spacer (White)	254-5007-01
8 ‡	1/2" Self Retain. Plastic Spacer (White)	254-5007-04
9 ‡	5/8" Self Retain. Plastic Spacer (White)	254-5007-00
10 ‡	3/4" Self Retain. Plastic Spacer (White)	254-5007-03
11 ‡	1" Self Retain. Plastic Spacer (White)	254-5007-06
12	1/2" X 1/4" O.D. X .147" I.D. Pls. Spacer (White)	254-5000-03
13	1/8" X 3/8" O.D. X .175" I.D. Pls. Spacer (Gray)	254-5000-19
14	3/16" X 3/8" O.D. X .175" I.D. Pls. Spcr. (Gray)	254-5000-18
15	1/4" X 3/8" O.D. X .200" I.D. Pls. Spcr. (Gray)	254-5000-02
16	1/4" X 3/8" O.D. X .175" I.D. Pls. Spacer (Gray)	254-5000-09
17	3/8" X 3/8" O.D. X .175" I.D. Pls. Spacer (Gray)	254-5000-12
18	1/2" X 3/8" O.D. X .175" I.D. Pls. Spacer (Gray)	254-5000-01
19	5/8" X 3/8" O.D. X .175" I.D. Pls. Spacer (Gray)	254-5000-14
20	3/4" X 3/8" O.D. X .175" I.D. Pls. Spacer (Gray)	254-5000-07

Nr.	PLASTIC POSTS & SPACERS	SPI PART Nr.
21	7/8" X 3/8" O.D. X .175" I.D. Pls. Spacer (Gray)	254-5000-11
22	1" X 3/8" O.D. X .175" I.D. Pls. Spacer (Gray)	254-5000-04
23	1 1/8" X 3/8" O.D. X .175" I.D. Pls. Spcr. (Gray)	254-5000-06
	Item 23 Only : Add the letter " N " for color Natural (if available) or " B " for color Black.	
24	1 1/4" X 3/8" O.D. X .175" I.D. Pls. Spcr. (Gray)	254-5000-05
25	1 1/2" X 3/8" O.D. X .175" I.D. Pls. Spcr. (Gray)	254-5000-08
26	1 15/16" X 3/8" O.D. X .147" I.D. Plastic Spacer (Gray)	254-5000-15
	Items 13-26 Only : Spacers may also be Black in color (random from vendor).	
	Not Shown and listed for reference only : 254-5000-10: 2 1/2" X 3/8" O.D. X .175" I.D. -13: 5/16" X 1/4" X .147"; -16: 5/16" X 5/16" X .190"; -17: 1 3/4" X 3/8" O.D. X .175" I.D.	
27	1/4" X 5/16" O.D. X .144" I.D. Metal Spacer	254-5014-03
28	1/2" X 5/16" O.D. X .144" I.D. Metal Spacer	254-5014-00
29	9/16" X 5/16" O.D. X .144" I.D. Metal Spacer	254-5014-04
30	3/4" X 5/16" O.D. X .144" I.D. Metal Spacer	254-5014-01
31	1 1/8" X 5/16" O.D. X .144" I.D. Metal Spacer	254-5014-02
32	1" X 5/16" O.D. X .144" I.D. Metal Spacer	254-5001-00
33‡	7/8" Plastic Spacer Support *(Dual-Locking)*	254-5039-14
34	Plastic Spacer, .5" Plastic Mounting	254-5054-00
35	Plastic Spacer, 1.13" Plastic Mounting	254-5054-01

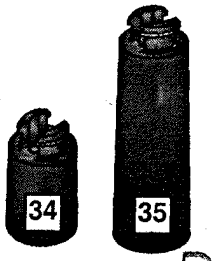

NOT ALL PARTS LISTED ABOVE ARE USED ON THIS GAME (QUANTITIES PER GAME WILL DIFFER). COMPARE ACTUAL PART ON GAME TO ABOVE DRAWINGS TO IDENTIFY THE P/N REQUIRED.

Parts Identification

Playfield Top & Bottom - Small Bayonet Sockets & Bulbs ■ (Actual Size) †

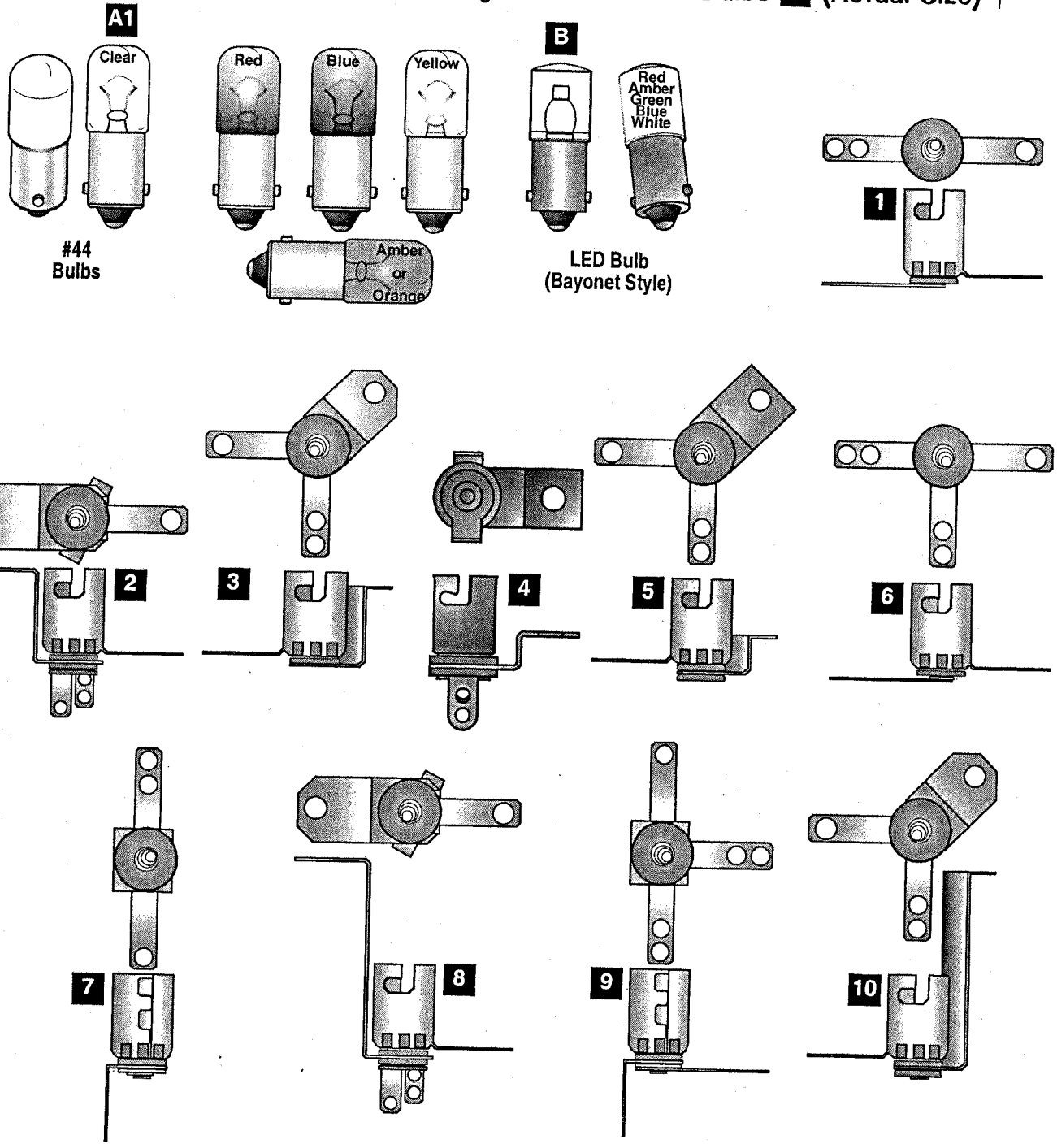

Nr.	BULBS (#44)	SPI PART Nr.
A	#44 Bulb (Clear) *Heavy Filament*	165-5000-44-HF
	#44 Bulb *(replace -XX w/color below)*	165-5053-XX-HF

Item A Note: Amber (165-5053-03-HF); Green (165-5053-04-HF); Yellow (165-5053-06-HF); Red (165-5053-02-HF); Blue (165-5053-05-HF); Orange (165-5053-07-HF)

Nr.	BULBS (LED & #455)	SPI PART Nr.
B	LED Module (WHT) (12.8v 20-25mA) Bynt.	112-5023-08

Item B Note: *Different Colors may be available ~*
Red (112-5023-02); Amber (112-5023-03); Green (112-5023-04); Blue (112-5023-05);

Nr.	SMALL BAYONET SOCKETS	SPI PART Nr.
1	2-Lug Staple Down Socket	077-5000-00
2	3-Lug Stand-Up Socket (Med. Brkt.)	077-5008-00
3	2-Lug Stand-Up Socket (Med. Brkt.)	077-5002-00
4	2-Lug Stand-Up Socket (Short Brkt.)	077-5223-00
5	2-Lug Stand-Up Sckt. (Short Bracket)	077-5002-31
6	3-Lug Staple Down Socket	077-5001-00
7	2-Lug Laydown Socket	077-5003-00
8	3-Lug Stand-Up Socket (Tall Bracket)	077-5009-00
9	3-Lug Laydown Socket (3 Lugs Flat)	077-5006-00
10	2-Lug Stand-Up Socket (Tall Bracket)	077-5005-00
11	3-Lug Stand-Up Long Shell Socket	077-5013-00
12	2-Lug Stand-Up Lg. Shell Socket (Gls)	077-5031-00
13	1-Lug S-U Lg. Shell Sckt. (Med. Brkt.)	077-5012-00
14	3-Lug S-U Lg. Shell Sckt. (45° Brkt.)	077-5035-00
15	3-Lug Laydown Socket (2 Lugs Bent)	077-5032-00

NOT ALL PARTS LISTED ABOVE ARE USED ON THIS GAME (QUANTITIES PER GAME WILL DIFFER). COMPARE ACTUAL PART ON GAME TO ABOVE DRAWINGS TO IDENTIFY THE PART NUMBER REQUIRED.

Playfield Top & Bot. - Small Bayonet Sockets & Bulbs ■ (Actual Size) † Continued

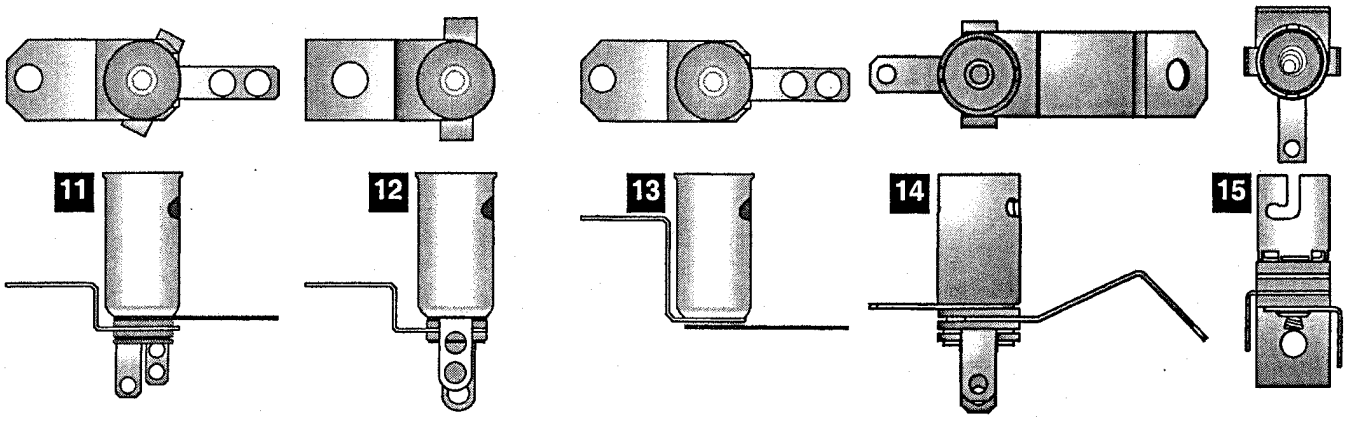

Playfield Bottom - Large Bayonet Sockets & Bulbs ■ (Actual Size) †

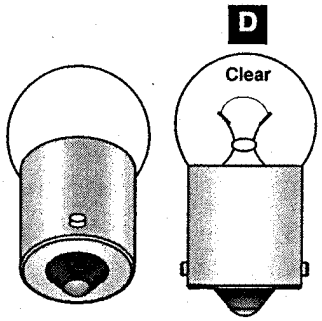

#89
Bulb

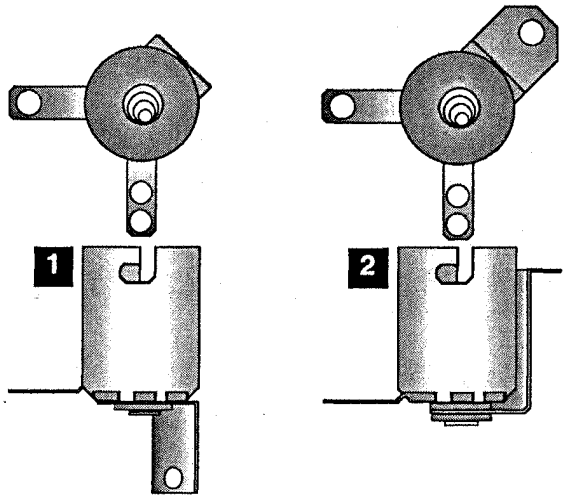

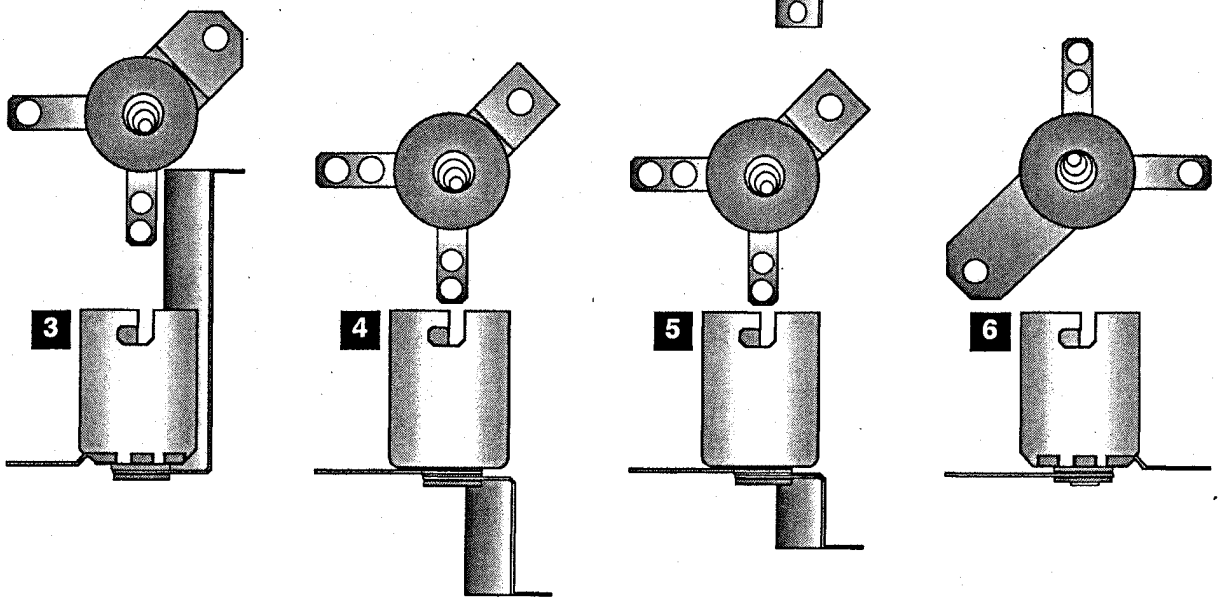

Nr.	BULBS (#89)	SPI PART Nr.
D	#89 Bulb *Heavy Filament*	165-5000-89-HF

1	2-Lug Laydown Standard Socket	077-5100-00
2	2-Lug Stand-Up Short Socket	077-5101-00
3	2-Lug Stand-Up Long Socket	077-5102-00
4	2-Lug Stand-Up Rev. Mount Socket	077-5103-00
5	2-Lug Stand-Up Rv. Mnt. Short Socket	077-5106-00
6	2-Lug Straight Leg Socket	077-5107-00

Nr.	LARGE BAYONET SOCKETS	SPI PART Nr.

NOT ALL PARTS LISTED ABOVE ARE USED ON THIS GAME (QUANTITIES PER GAME WILL DIFFER). COMPARE ACTUAL PART ON GAME TO ABOVE DRAWINGS TO IDENTIFY THE PART NUMBER REQUIRED.

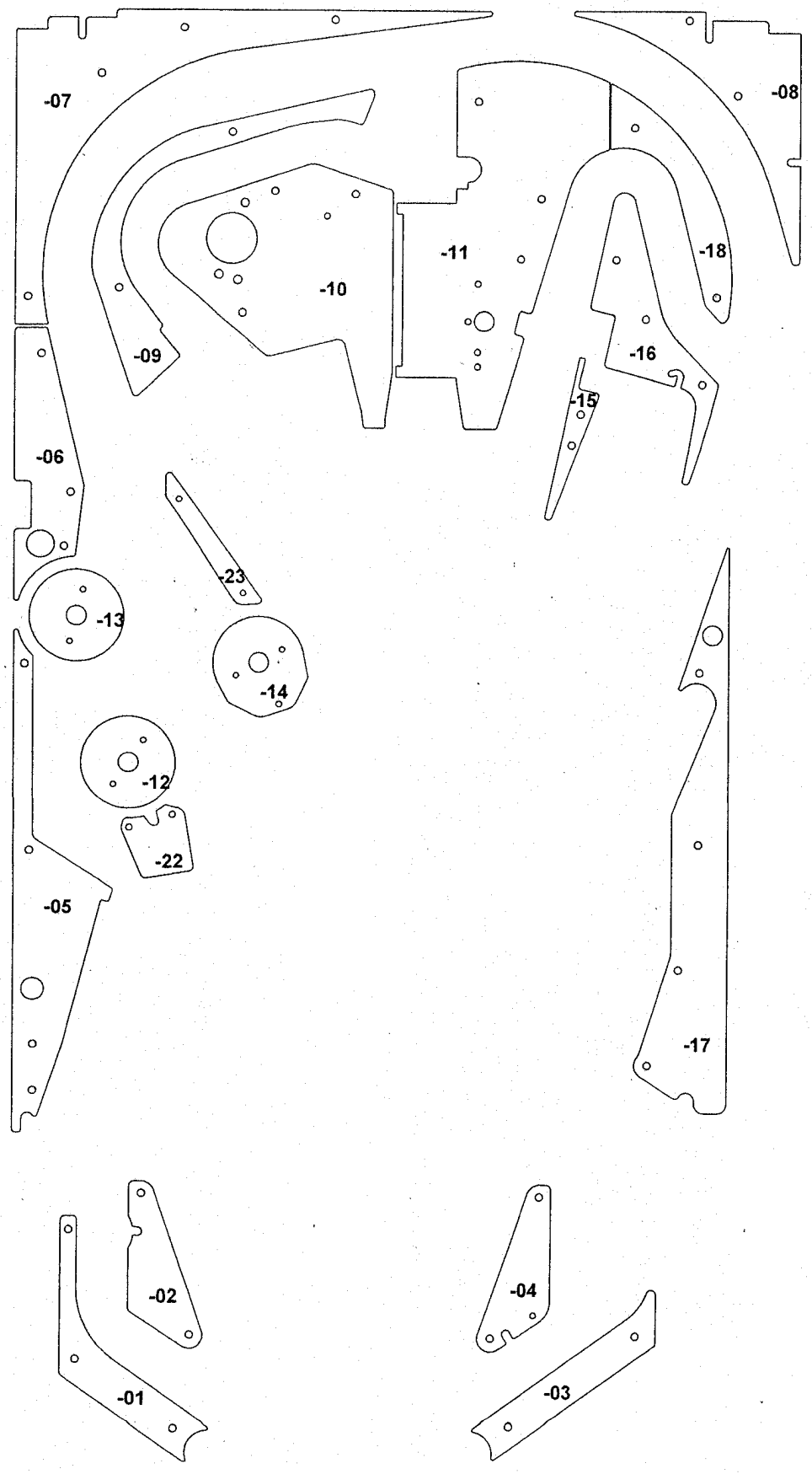

PLASTICS - LOWER LAYER

P22

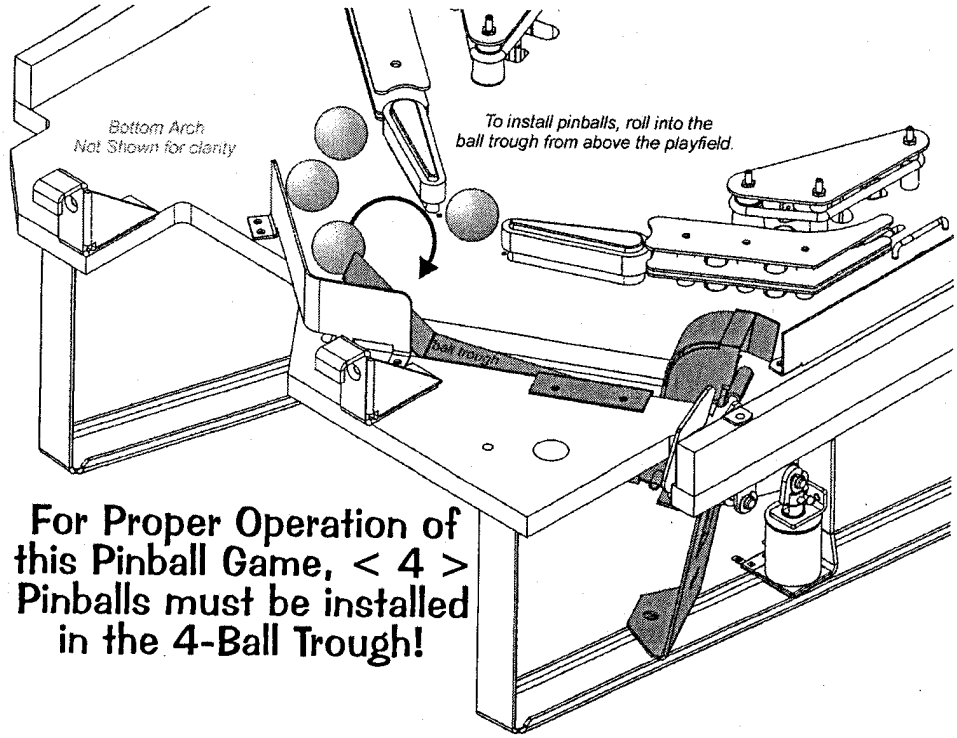

For Proper Operation of this Pinball Game, < 4 > Pinballs must be installed in the 4-Ball Trough!

Backbox Fuses*, Cabinet Fuses, Playfield Fuses and Cabinet Switches

***Note:** The CPU/Sound PCB does not have fuses.*

QUICK REFERENCE FUSE CHART

3/4A S.B. 200-5000-17 | 3A S.B. 200-5000-08 | 4A S.B. 200-5000-06 | 5A S.B. 200-5000-01 | 7A S.B. 200-5000-03 | 8A S.B. 200-5000-05

BACKBOX FUSES

I/O POWER DRIVER BOARD

with RED LED STATUS INDICATORS (if any RED LED is OFF, check the fuse)

F1	5A S.B.	5.7VAC~ G.I. Lamps	[BROWN-WHITE⇆WHT-BRN]
F2	5A S.B.	5.7VAC~ G.I. Lamps	[YELLOW⇆WHITE-YEL Circuit]
F3	5A S.B.	5.7VAC~ G.I. Lamps	[GREEN⇆WHITE-GRN Circuit]
F4	5A S.B.	5.7VAC~ G.I. Lamps	[VIOLET⇆WHITE-VIO Circuit]
F5	7A S.B.	50VDC Coils / Flippers	[48VAC *feed to* BRDG 1]
F6	3A S.B.	24VAC~ Motor or *Special Application*	
F7	4A S.B.	50VDC Magnet(s) or *Special Application*	
F8	3A S.B.	50VDC Coils	
F9	8A S.B.	18VDC Control Lamps	[13VAC *feed to* BRDG 4]
F10	5A S.B.	20VDC Coils / Flashers	[16VAC *feed to* BRDG 2]
F11	4A S.B.	5VDC Logic Power	[8VAC *feed to* BRDG 5]
F12	5A S.B.	12VDC Audio	[19VAC *feed to* BRDG 3]
F13	5A S.B.	12VDC Audio	[19VAC *feed to* BRDG 3]

DISPLAY POWER SUPPLY BOARD

F1	¾A S.B.	90VDC High Voltage Dot Display Board	

CABINET FUSES

POWER (SERVICE OUTLET) BOX

(Access thru 3/4 Coin Door inside cabinet, front bottom.)

8A S.B.	110-120V Main Line *US / Canada / Japan*
5A S.B.	220-240V Main Line *International*

PLAYFIELD FUSES

FLIPPER OR SPECIAL APPLICATION

(Coil Fuses are located under the playfield near assembly.)

3A S.B.	50VDC R. Flipper [BLU-YEL⇆RED-YEL]
3A S.B.	50VDC L. Flipper [GRY-YEL⇆RED-YEL]
3A S.B.	50VDC *Additional Flipper Coil, if used*
3A S.B.	50VDC *Spcl. Application Coil, if used*

For location & more details on fuses, see Sec. 5, Pg. 2

ALL FUSES ARE 250V S.B. (SLO-BLO)
SEE FUSE OR TABLES FOR AMP RATING
CAUTION **: FOR CONTINUED PROTECTION AGAINST RISK OF FIRE, REPLACE ONLY WITH SAME TYPE FUSE WITH IDENTICAL ELECTRICAL RATING!**

Stern Pinball®, Inc. ©2008

820-6384-00 Rev. C

Inside Coin Door

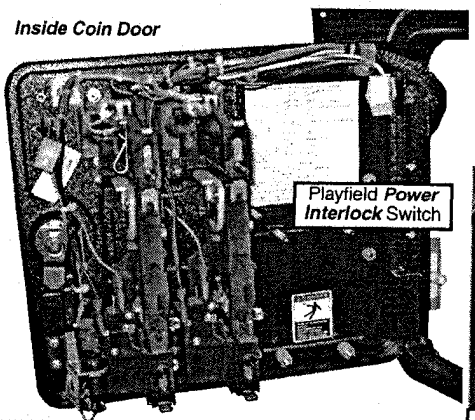

4-Button Switch Set:

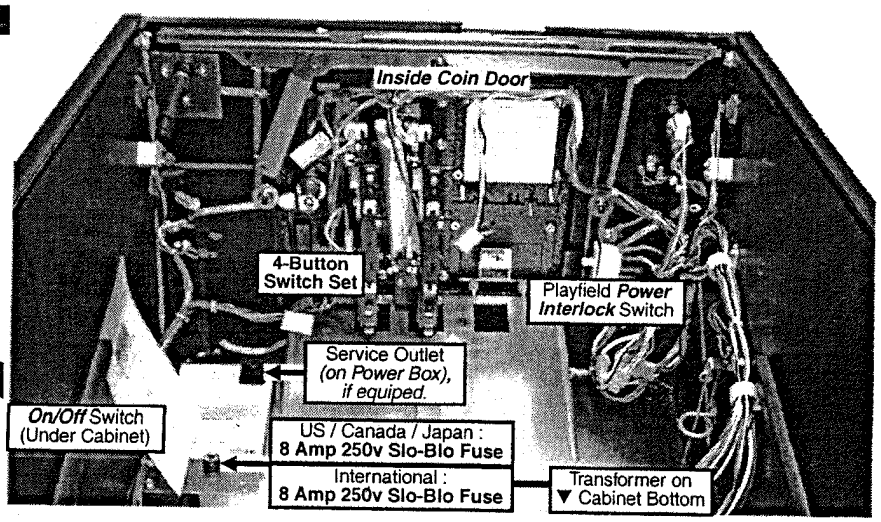

OPEN THE COIN DOOR TO ACCESS THE SERVICE SWITCH X4 SET.

● ● ● ● Service Switch X4 Set Overview

The four buttons *(inside Coin Door)* have dual functions depending if you have entered the **Service Menu** or not.

Functions in Game or Attract Mode

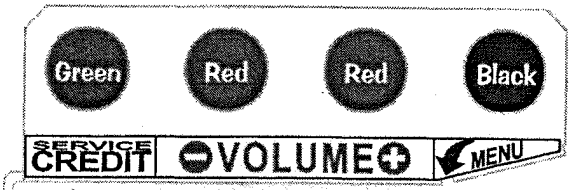

● Green Button	●● Red Buttons	● Black Button
Press for **Service Credit(s).**	Press for **Volume Adjustment** – *for less (quieter),* + *for more (louder)*	Press for **Service Menu** *entry.*

Functions in the Service Menu

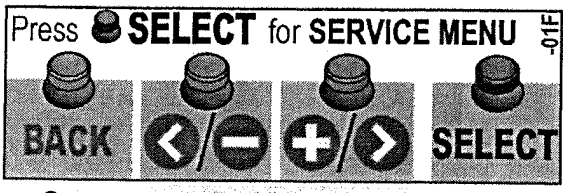

● Green Button	●● Red Buttons	● Black Button
Press to **Escape Back** *(or Exit).*	Press to move < **Left , Right** >. Press to – **Decrease** *or* + **Increase** values *or* to change settings.	Press to **Enter Select** *(or 'OK').*

Inside Coin Door

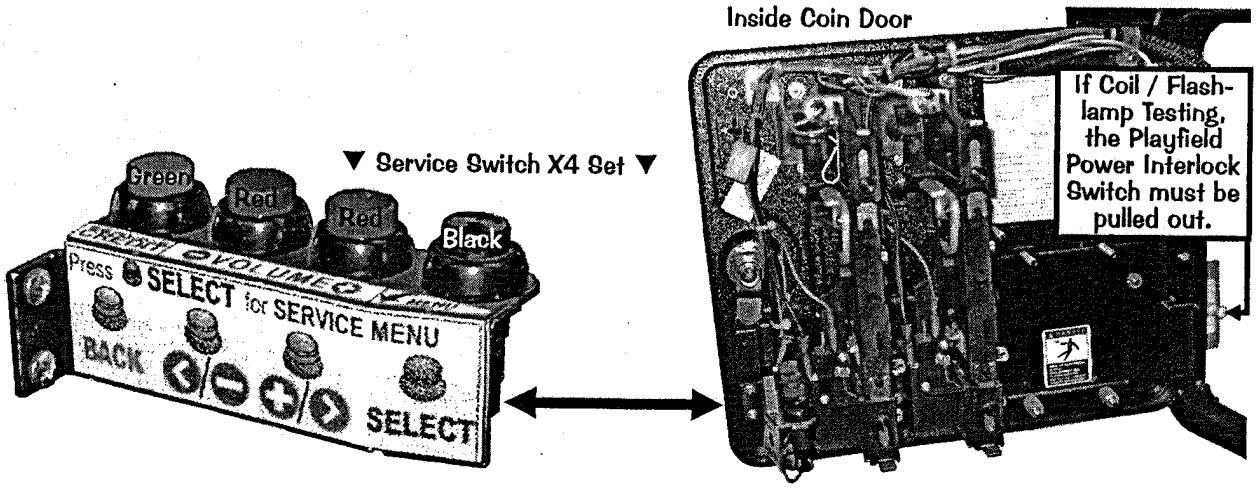

EXAMPLE:

To enter the **SERVICE MENU**, then enter the **SWITCH TEST MENU** via the **DIAGNOSTIC MENU**, perform the below steps.

Step 1 Press **[SELECT]**.

Step 2 With the "DIAG" *Icon* highlighted, press **[SELECT]**.

Step 3 With the "SW" *Icon* highlighted, press **[SELECT]**.

Step 4 With the "TEST" *Icon* highlighted, press **[SELECT]**.

Press any switch. If wired correctly, the information in the display will match the information in the Switch Matrix (see DR. 4).

Press [<] or [>] to move left or right through the menus.

Press [BACK] to go back a menu, exit or escape at any time.

Continue through the other menus.

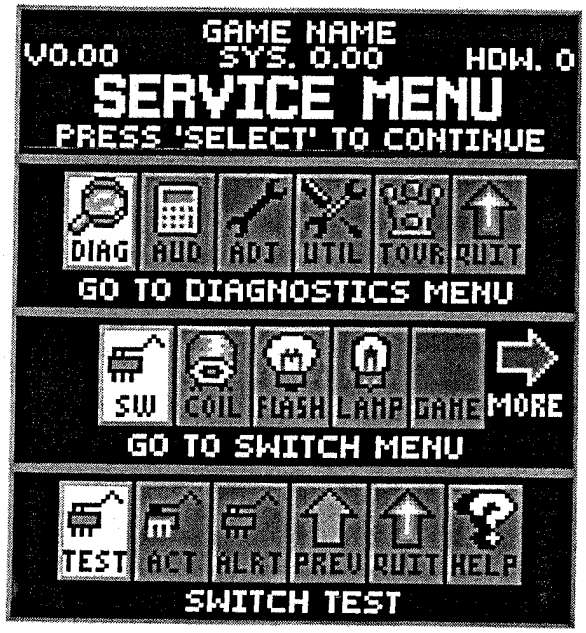

The Service Menu is subject to change. Update this game with the latest code downloaded from out website with a USB Data Storage Device (64MB min., recommendation 128MB or higher). See the inside front cover for directions or in the Service Menu "Go To Utilities Menu" then "Go To USB Menu" and follow prompts.

DIAGNOSTIC AIDS

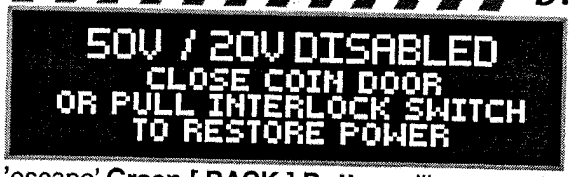

This ***audible / visual alert display*** is shown when the **50V / 20V Power** is disabled *(by opening the Coin Door)*. PULL OUT THE INTERLOCK SWITCH ONLY WHILE IN THE SERVICE MENU FOR COIL, SWITCH OR PLAY TESTING WHEN THE COIN DOOR IS REQUIRED TO STAY OPEN FOR SERVICE BUTTON USE! Pulling out the Power Interlock Switch or pressing the 'escape' **Green [BACK] Button** will remove the alert display. Initial display presentation is accompanied by 3 audible tones *(the bright display warning will go dim after approximately 30 seconds)*.

This ***alert display*** is shown momentarily during **Game Mode** or **Power-Up** to alert the operator of a device malfunction *(device or mechanism doesn't energize or is energized repeatedly)*. **OPERATOR ALERT!** works by monitoring any *switch activated device* that has the potential to trap a ball when disabled *(e.g. in the Shooter Lane, Scoop or Eject Holes, etc.)*. This alert can also appear if a switch associated with a device *(e.g. Ball Trough, Auto Plunger, etc.)* is stuck closed *(caused by a switch jam or stuck ball)*; the game will activate the device a predetermined number of times and if the problem is still detected, this device *or* switch will be noted in **Switch Alerts** *and/or* **Technician Alerts.**

Upon entering the **SERVICE MENU**, if an asterisk " * " is displayed after the words "SERVICE MENU," the game has detected possible faulty devices, switches and/or missing pinballs. Press the either of the **Red Buttons** *(short-cut to the TECHNICIAN ALERTS MENU) or* continue into the **SERVICE MENU** *(press the **Black Button** again)*, select the "DIAG" *Icon* and "TECH" *Icon* for the **Technician Alerts** information.

CPU DIP SWITCH SETTINGS

The 8-Pos. Dip Switch [SW1] is on the CPU/Sound Board (between Conn. J3 & J13, lower left corner)

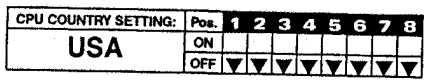

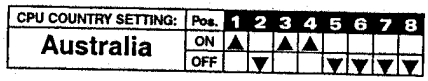

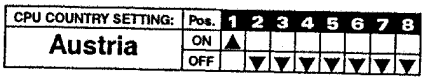

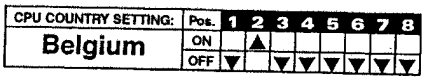

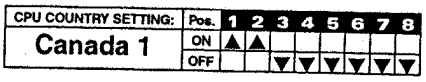

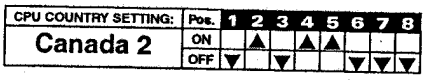

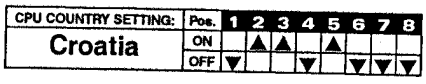

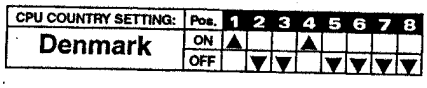

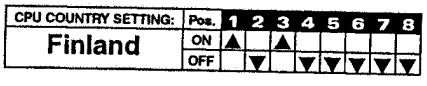

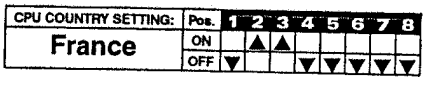

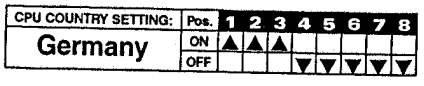

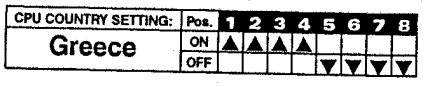

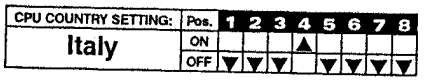

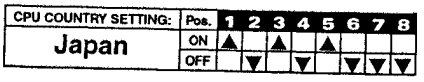

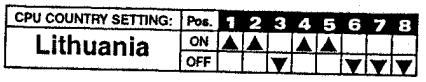

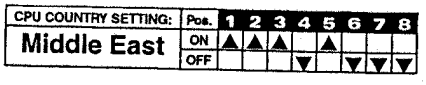

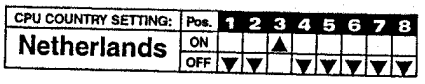

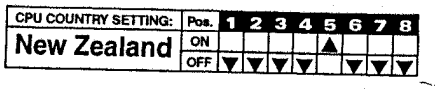

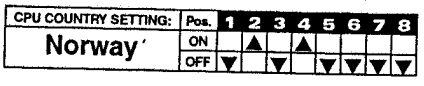

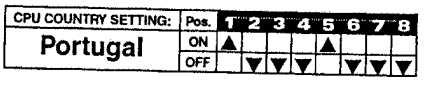

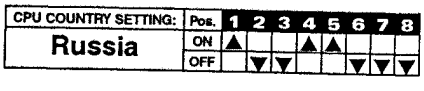

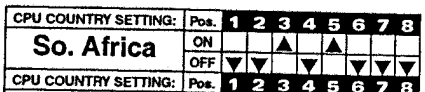

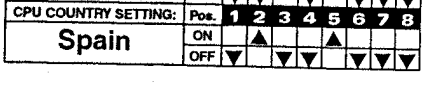

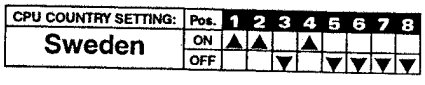

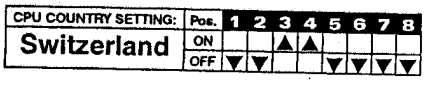

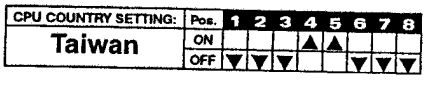

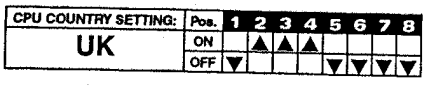

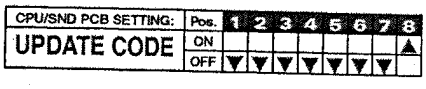

Note: *Slide Dip Switch 8 to Position **ON** (with Dip Switches 1-7 in the **OFF** Position) only to reboot the game with the latest version BOOT EPROM installed at **U9** on the CPU/Sound Board (S.A.M. System only). Currently, this is also the procedure to update your game with the latest software code update file. For the latest version, visit our website. If you have questions about updating your game code, call Technical Support for assistance.*

SWITCH MATRIX GRID [#1 - #64] {Switch Locations : next page}

CPU/ Sound Board	01 IC-U22A	02 IC-U22B	03 IC-U22C	04 IC-U22D	05 IC-U16A	06 IC-U16B	07 IC-U16C	08 IC-U16D	09 IC-U36A	10 IC-U36B	11 IC-U36C	12 IC-U36D	13 IC-U40A	14 IC-U40B	15 IC-U40C	16 IC-U40D
	RETURN▲	RETURN▲	RETURN▲	RETURN▲	RETURN▲	RETURN▲	RETURN▲	RETURN▲	RETURN▲	RETURN▲	RETURN▲	RETURN▲	RETURN▲	RETURN▲	RETURN▲	RETURN▲
	WHT-BRN J6-P9	WHT-RED J6-P8	WHT-ORG J6-P7	WHT-YEL J6-P6	WHT-GRN J6-P5	WHT-BLU J6-P3	WHT-VIO J6-P2	WHT-GRY J6-P1	TAN-BLK J12-P9	TAN-RED J12-P8	TAN-ORG J12-P7	TAN-YEL J12-P6	TAN-GRN J12-P4	TAN-BLU J12-P3	TAN-VIO J12-P2	TAN-WHT J12-P1
01 Q1 DRIVE ▶ GRN-BRN J1-P1	S.W. #1 L. 2 BANK TARGET (BOT) 515-7568-08 BELOW PF	S.W. #2 L. 2 BANK TARGET (TOP) 515-7568-08 BELOW PF	S.W. #3	S.W. #4 LEFT EJECT 180-5183-00 BELOW PF.	S.W. #5	S.W. #6	S.W. #7 R. 2 BANK TARGET (TOP) 515-7640-08 BELOW P.F	S.W. #8 R. 2 BANK TARGET (BOT) 515-7640-08 BELOW P.F.	S.W. #9	S.W. #10	S.W. #11 L. RAMP EXIT 180-5087-00 ABOVE P.F.	S.W. #12 L. NIGHTCRAW DOWN 180-5119-02 BELOW P.F.	S.W. #13 L. RAMP ENTRANCE 180-5087-00 ABOVE P.F.	S.W. #14 LEFT ORBIT 500-6227-04 BELOW P.F.	S.W. #15 TOURN START 180-5174-00 IN CABINET	S.W. #16 START 180-5174-00 IN CABINET
02 Q2 DRIVE ▶ GRN-RED J1-P3	S.W. #17	S.W. #18 TROUGH #4 LEFT 180-5119-02 BELOW PF	S.W. #19 TROUGH #3 180-5119-02 BELOW PF	S.W. #20 TROUGH #2 180-5119-02 BELOW PF	S.W. #21 TROUGH #1 RIGHT 515-0173-00 515-0174-00	S.W. #22 TROUGH JAM 515-0173-00 515-0174-00	S.W. #23 SHOOTER LANE 180-5157-00 BELOW P.F.	S.W. #24 LEFT OUTLANE 500-6227-03 BELOW P.F.	S.W. #25 LEFT RETURN LANE 500-6227-03 BELOW P.F.	S.W. #26 LEFT SLINGSHOT 180-5054-00 BELOW P.F.	S.W. #27 RIGHT SLINGSHOT 180-5054-00 BELOW P.F.	S.W. #28 RIGHT RETURN LANE (L) 500-6227-03 BELOW PF.	S.W. #29 RIGHT OUTLANE 500-6227-03 BELOW PF.	S.W. #30 LEFT POP BUMPER 180-5015-04 BELOW PF.	S.W. #31 RIGHT POP BUMPER 180-5015-04 BELOW PF.	S.W. #32 BOTTOM POP BUMPER 180-5015-04 BELOW P.F.
03 Q3 DRIVE ▶ GRN-ORG J1-P4	S.W. #33 RIGHT RETURN LANE (R) 500-6227-03 BELOW P.F.	S.W. #34 ICEMAN HOME 180-5119-02 BELOW P.F.	S.W. #35 ICEMAN AWAY 180-5119-02 BELOW P.F.	S.W. #36 WOLVERINE TARGET 515-7568-08 BELOW P.F.	S.W. #37	S.W. #38 CENTER LOCK 2 500-6775-01 ABOVE P.F.	S.W. #39 CENTER LOCK 3 500-6775-01 ABOVE P.F.	S.W. #40 CENTER LOCK 4 (TOP) 500-6775-01 BELOW P.F.	S.W. #41 LIGHT LOCK TARGET (L) 515-7581-04 BELOW P.F.	S.W. #42 LIGHT LOCK TARGET (R) 515-7581-04 BELOW P.F.	S.W. #43	S.W. #44	S.W. #45	S.W. #46	S.W. #47 RIGHT SPINNER 180-5010-04 ABOVE P.F.	S.W. #48 R. RAMP ENTRANCE 180-5087-00 ABOVE P.F.
04 Q4 DRIVE ▶ GRN-YEL J1-P5	S.W. #49 RIGHT ORBIT 500-6227-04 BELOW P.F.	S.W. #50 (L) NIGHTCRAW HIT 180-5220-00 BELOW P.F.	S.W. #51 (R) NIGHTCRAW HIT 180-5220-00 BELOW P.F.	S.W. #52 R. RAMP EXIT 180-5087-00 ABOVE P.F.	S.W. #53 CENTER LOCK 1 (BOTTOM) 500-6227-04 BELOW P.F.	S.W. #54 L. INNER LOOP 500-6227-04 BELOW P.F.	S.W. #55 LEFT UP KICKER 180-5209-00 BELOW P.F.	S.W. #56 R. NIGHTCRAW DOWN 180-5119-02 BELOW P.F.	S.W. #57	S.W. #58	S.W. #59	S.W. #60	S.W. #61	S.W. #62	S.W. #63	S.W. #64

« FOR MORE ABOUT DIODE ON TERMINAL STRIPS «D.O.T.S.», SEE SECTION 5, CHPAPTER 2, PAGES 104-105 »

Wire Color Abbreviations used: BLK Black, BLU Blue, BRN Brown, GRY Gray, GRN Green, LGN Light Grn.n, ORG Orange, PNK Pink, RED Red, TAN Tan, VIO Violet, WHT White, YEL Yellow

Dedicated Switches [#D-1 - #D-32] {Dedicated Switch Locations : next page}

CPU/SND Board	IC-U2 PNK-BRN J2-P2	IC-U2 PNK-RED J2-P3	IC-U2 PNK-ORG J2-P4	IC-U2 PNK-YEL J2-P5	IC-U2 PNK-GRN J2-P7	IC-U2 PNK-BLU J2-P8	IC-U2 PNK-VIO J2-P9	IC-U2 PNK-GRY J2-P10	IC-U4 GRY-BRN J3-P1	IC-U4 GRY-RED J3-P2	IC-U4 GRY-ORG J3-P4	IC-U4 GRY-YEL J3-P5	IC-U4 GRY-GRN J3-P6	IC-U4 GRY-BLU J3-P7	IC-U4 GRY-VIO J3-P8	IC-U4 GRY-BLK J3-P9
GROUND (BLK) J2-P1/11 & J3-P10	S.W. D-1 LEFT COIN SLOT 180-5204-00 COIN DOOR	S.W. D-2 CENTER COIN SLOT DBA COIN DOOR	S.W. D-3 RIGHT COIN SLOT 180-5204-00 COIN DOOR	S.W. D-4 FORTH COIN SLOT 180-5204-00 COIN DOOR	S.W. D-5 FIFTH COIN SLOT IF USED	S.W. D-6	S.W. D-7	S.W. D-8	S.W. D-9 LEFT FLIPPER BUTTON 500-6889-01 CABINET	S.W. D-10 LEFT FLIPPER E.O.S. 180-5149-00 FLIP ASSY.	S.W. D-11 RIGHT FLIPPER BUTTON 500-6890-01 CABINET	S.W. D-12 RIGHT FLIPPER E.O.S. 180-5149-00 FLIP ASSY.	S.W. D-13	S.W. D-14	S.W. D-15 U.R. FLIPPER BUTTON 500-6890-01 CABINET	S.W. D-16

CPU/SND Board	IC-11 LGN-BRN J13-P1	IC-11 LGN-RED J13-P3	IC-11 LGN-ORG J13-P4	IC-11 LGN-YEL J13-P5	IC-11 LGN-BLK J13-P8	IC-11 LGN-BLU J13-P7	IC-11 LGN-VIO J13-P6	IC-11 LGN-GRY J13-P10
GROUND (BLK) J13-P10	S.W. D-17 TILT PENDULUM CABINET	S.W. D-18 SLAM TILT	S.W. D-19 TICKET NOTCH IF USED	S.W. D-20	S.W. D-21 BACK (GREEN) 180-5192-04 COIN DOOR	S.W. D-22 MINUS (RED) 180-5192-02 COIN DOOR	S.W. D-23 PLUS (RED) 180-5192-02 COIN DOOR	S.W. D-24 SELECT (BLACK) 180-5192-00 COIN DOOR

CPU/SOUND BD. SW1 DIP SWITCH *(located between Connectors J3/J13)*

S.W. D-25	S.W. D-26	S.W. D-27	S.W. D-28	S.W. D-29	S.W. D-30	S.W. D-31	S.W. D-32
DIP (1)2345678	DIP 1(2)345678	DIP 12(3)45678	DIP 123(4)5678	DIP 1234(5)678	DIP 12345(6)78	DIP 123456(7)8	DIP 1234567(8)
S.W. POS. #1 ON	S.W. POS. #2 ON	S.W. POS. #3 ON	S.W. POS. #4 ON	S.W. POS. #5 ON	S.W. POS. #6 ON	S.W. POS. #7 ON	S.W. POS. #8 ON

SWITCH MENU: SWITCH, ACTIVE, SINGLE & SERVICE

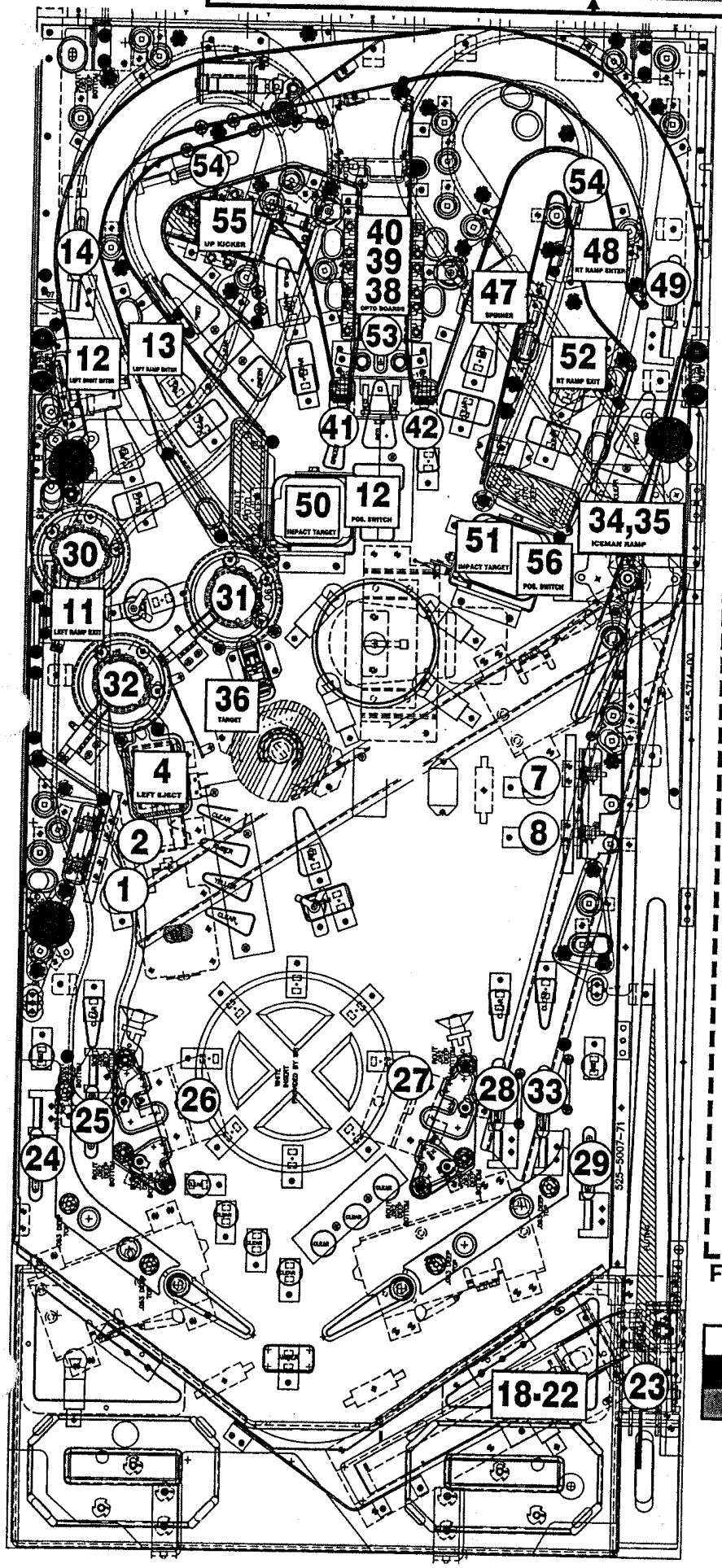

Typical Switch Wiring & Schematic

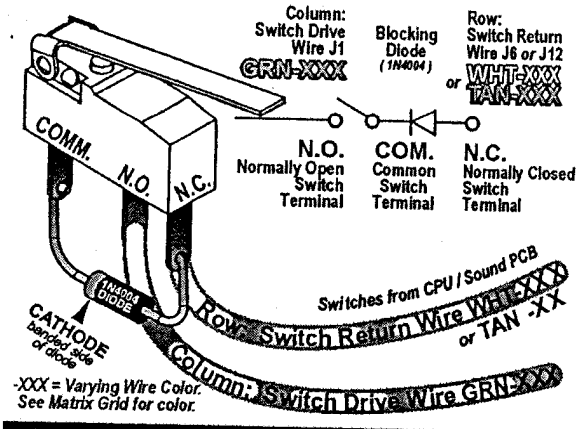

-XXX = Varying Wire Color.
See Matrix Grid for color.

Dedicated Switch Schematic

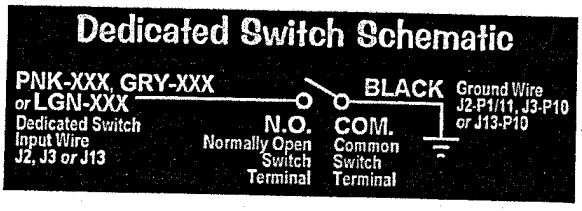

Typical Switch Wiring & Schematic
... with Switch Diode on a Terminal Strip (DOTS)

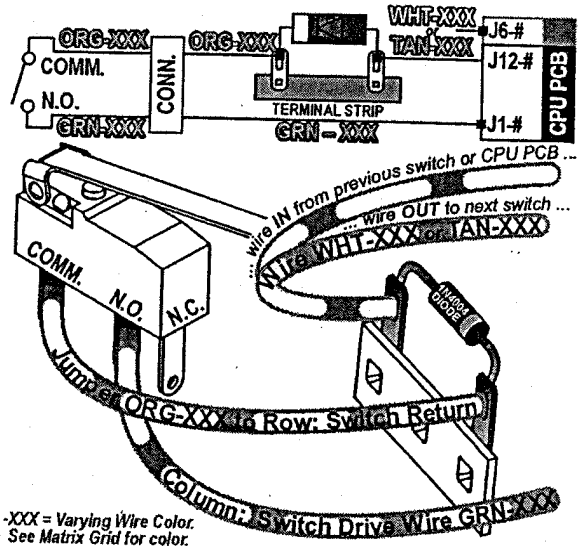

-XXX = Varying Wire Color.
See Matrix Grid for color.

For more about Diode on Terminal Strips (DOTS), see the Yellow Pages (Schematics & Wiring).

= Switches above Playfield.
= Switches below Playfield.
= OPTO Switch Pairs above.

Switch Part Notes: *¥ Yen Coin Switch is 180-5091-00. Part Numbers which start with 515- or 500- include the bracket, target, and/or housing.*

Sw. D-17 Part Note: *The Switch is comprised of a Hanger Bracket (535-5319-00) and Contact Wire (535-7563-01) located in the Cabinet.*

I / O Power Driver Board

LAMP MATRIX GRID [#1 - #80] {Lamp Locations : next page}

L.P. #1	L.P. #2	L.P. #3	L.P. #4	L.P. #5	L.P. #6	L.P. #7	L.P. #8
L.P. #9	L.P. #10	L.P. #11	L.P. #12	L.P. #13	L.P. #14	L.P. #15	L.P. #16
LED BD. L.P. #17 OMEGA RED 520-6779-01	LED BD. L.P. #18 SENTINELS 520-6779-01	LED BD. L.P. #19 BROTHERHOOD 520-6779-01	LED BD. L.P. #20 ROGUE 520-5307-00	LED BD. L.P. #21 ICEMAN 520-5307-00	LED BD. L.P. #22 WOLVERINE 520-5307-00	LED BD. L.P. #23 XAVIER 520-5307-00	LED BD. L.P. #24 STORM 520-5307-00
LED BD. L.P. #25 PHOENIX 520-5307-00	LED BD. L.P. #26 CYCLOPS 520-5307-00	LED BD. L.P. #27 BEAST 520-5307-00	LED BD. L.P. #28 SABERTOOTH 520-5307-00	LED BD. L.P. #29 SHADOW KING 520-5307-00	LED BD. L.P. #30 HELLFIRE CLUB 520-5307-00	LED BD. L.P. #31 JUGGERNAUT 520-5307-00	LED BD. L.P. #32 SHOOT AGAIN 520-5307-00
LED BD. L.P. #33 LEFT SPECIAL 520-5307-00	LED BD. L.P. #34 LEFT RETURN LANE 520-5307-00	LED BD. L.P. #35 LEFT 2 BANK (BOTTOM) 520-5307-00	LED BD. L.P. #36 LEFT 2 BANK (TOP) 520-5307-00	LED BD. L.P. #37 WOLVERINE 520-5307-00	LED BD. L.P. #38 WOLVERINE (RED) 520-5307-00	LED L.P. #39 START BUTTON 112-5024-08	LED L.P. #40 TOURNEY START 112-5024-08
LED L.P. #41 BOTTOM BUMPER 112-5024-08	LED L.P. #42 RIGHT BUMPER 112-5024-08	LED L.P. #43 LEFT BUMPER 112-5024-08	L.P. #44	LED BD. L.P. #45 DARK PHOENIX 520-6779-03	LED BD. L.P. #46 EXTRA BALL 520-6779-03	LED BD. L.P. #47 DANGER ROOM 520-6779-03	LED BD. L.P. #48 VILLIAN 520-6779-03
LED BD. L.P. #49 LEFT INNER LOOP (GREEN) 520-6779-01	LED BD. L.P. #50 ROGUE 520-6779-01	LED BD. L.P. #51 LEFT INNER LOOP (RED) 520-6779-01	LED BD. L.P. #52 GAMBIT 520-5307-00	LED BD. L.P. #53 BEAST 520-5307-00	LED BD. L.P. #54 LEFT ORBIT (RED) 520-5307-00	LED BD. L.P. #55 LEFT RAMP (RED) 520-5307-00	LED BD. L.P. #56 STORM 520-5307-00
LED BD. L.P. #57 UP KICKER (RED) 520-5307-00	LED BD. L.P. #58 XAVIER 520-5307-00	LED BD. L.P. #59 LEFT EJECT (TOP) 520-5307-00	LED BD. L.P. #60 LIGHT LOCK (LEFT) 520-5307-00	L.P. #61	L.P. #62	LED BD. L.P. #63 WOLVERINE HEAD 520-5307-00	L.P. #64
LED BD. L.P. #65 MAGNETO (GREEN) 520-6779-01	LED BD. L.P. #66 MAGNETO 520-6779-01	LED BD. L.P. #67 MAGNETO (RED) 520-6779-01	LED BD. L.P. #68 RIGHT RETURN LANE (LEFT) 520-5307-00	LED BD. L.P. #69 RIGHT RETURN LANE (RIGHT) 520-5307-00	LED BD. L.P. #70 RIGHT SPECIAL 520-5307-00	LED BD. L.P. #71 RIGHT 2 BANK TARGET (BOTTOM) 520-5307-00	LED BD. L.P. #72 RIGHT 2 BANK TARGET (TOP) 520-5307-00
LED BD. L.P. #73 ICEMAN 520-5307-00	LED BD. L.P. #74 RIGHT RAMP (RED) 520-5307-00	LED BD. L.P. #75 RIGHT INNER LOOP (RED) 520-5307-00	LED BD. L.P. #76 CYCLOPS 520-5307-00	LED BD. L.P. #77 LIGHT LOCK (RIGHT) 520-5307-00	LED BD. L.P. #78 RIGHT ORBIT (RED) 520-5307-00	LED BD. L.P. #79 PHOENIX 520-5307-00	LED BD. L.P. #80 RIGHT ORBIT (GREEN) 520-5307-00

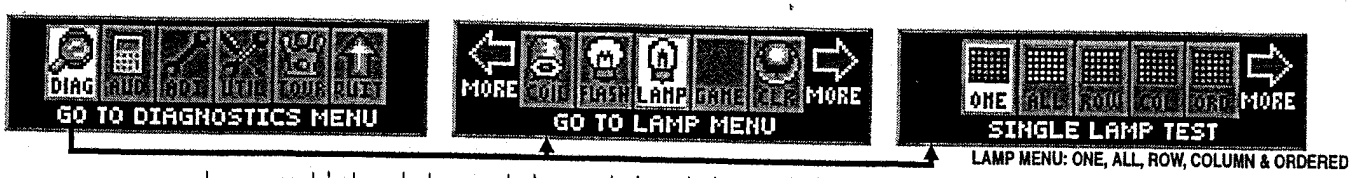
DIAG
GO TO DIAGNOSTICS MENU
MORE
COIN
FLASH
LAMP
GAME
SEQ
MORE
GO TO LAMP MENU
ONE
ALL
ROW
COL
ORD
MORE
SINGLE LAMP TEST
LAMP MENU: ONE, ALL, ROW, COLUMN & ORDERED

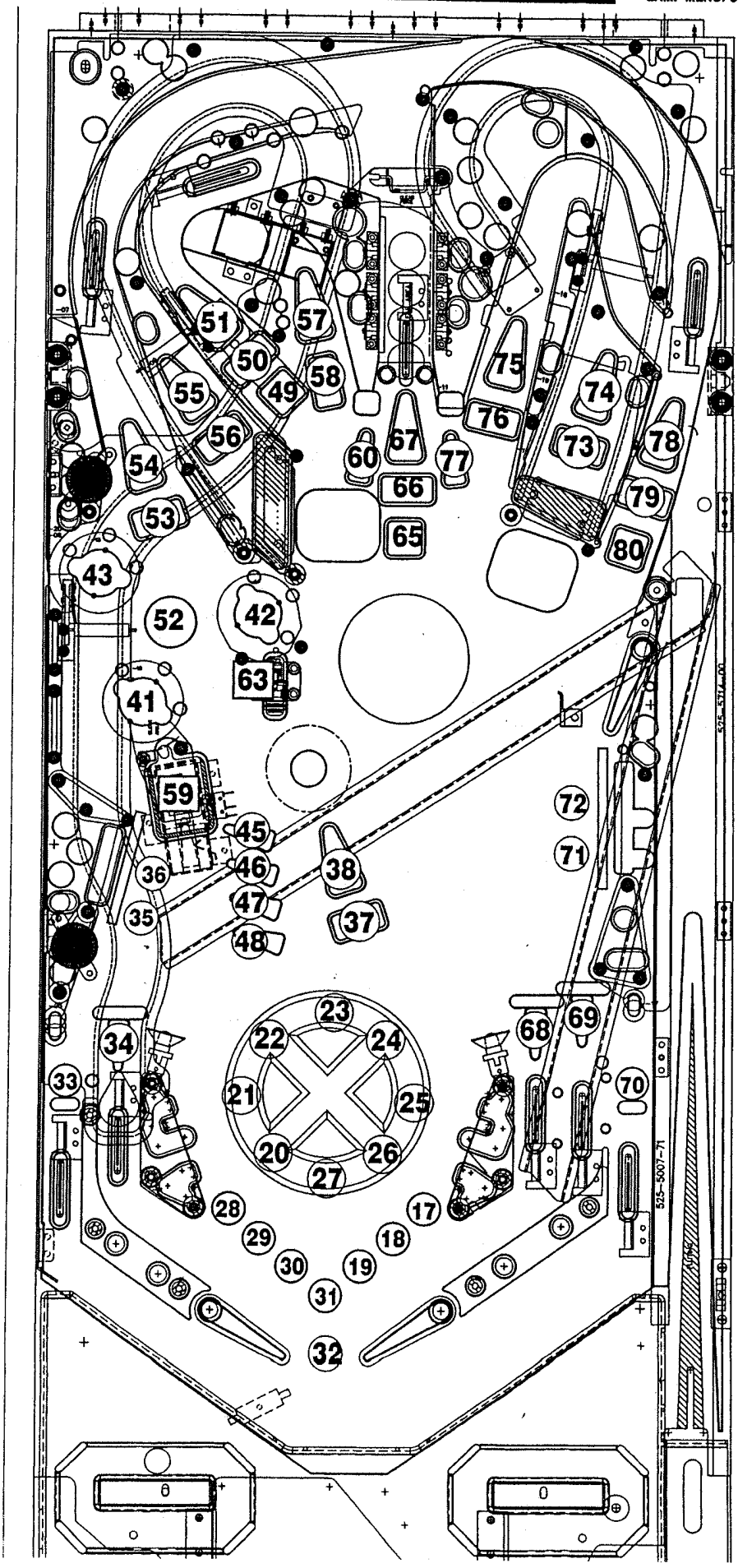
51
57
50
58
49
55
56
54
53
43
52
42
63
41
59
45
46
36
47
35
48
38
37
23
22
24
21
25
20
26
27
34
33
28
29
30
31
32
17
18
19
75
74
76
73
78
67
60
77
66
79
65
80
72
71
68
69
70
535-5007-71

COILS DETAILED CHART TABLE

High Current Coils Group 1		Drive Transistor	Driver Output PCB	Power Line Color	Power Line Connection	Power Voltage	Drive Transistor Control Line Color	D.T. Control Line Connect	Coil GA-Turn or Bulb Type
#1	TROUGH UP-KICKER	Q1	▲ I/O Power Driver ▼	YEL-VIO	J10-P9/10	50VDC	BRN-BLK	J8-P1	26-1200 090-5044-ND
#2	AUTO LAUNCH	Q2		YEL-VIO	J10-P9/10	50VDC	BRN-RED	J8-P3	24-940 090-5036-ND
#3	LOWER LEFT EJECT	Q3		YEL-VIO	J10-P9/10	50VDC	BRN-ORG	J8-P4	23-800 090-5001-ND
#4	MAGNETO MAGNET	Q4		VIO-YEL	J10-P8	50VDC	BRN-YEL	J8-P5	22-800 090-5078-00
#5	LEFT UP KICKER	Q5		YEL-VIO	J10-P9/10	50VDC	BRN-GRN	J8-P6	23-800 090-5001-ND
#6	CENTER LOCKUP UP	Q6		YEL-VIO	J10-P9/10	50VDC	BRN-BLU	J8-P7	26-1200 090-5044-ND
#7	CENTER LOCKUP LATCH	Q7		YEL-VIO	J10-P9/10	50VDC	BRN-VIO	J8-P8	32-1800 515-7695-00
#8	SHAKER MOTOR (OPTIONAL)	Q8		RED-WHT	J17-P7	16VAC	BRN-GRY	J8-P9	502-5027-00

High Current Coils Group 2		Drive Transistor	Driver Output PCB	Power Line Color	Power Line Connection	Power Voltage	Drive Transistor Control Line Color	D.T. Control Line Connect	Coil GA-Turn or Bulb Type
#9	LEFT POP BUMPER	Q9	▲ I/O Power Driver ▼	YEL-VIO	J10-P9/10	50VDC	BLU-BRN	J8-P1	26-1200 090-5044-ND
#10	RIGHT POP BUMPER	Q10		YEL-VIO	J10-P9/10	50VDC	BLU-RED	J8-P2	26-1200 090-5044-ND
#11	BOTTOM POP BUMPER	Q11		YEL-VIO	J10-P9/10	50VDC	BLU-ORG	J8-P4	26-1200 090-5044-ND
#12	UPPER RIGHT FLIPPER	Q12		GRY-YEL 3A	J10-P6/7	50VDC	BLU-YEL	J8-P5	22-1080 090-5032-ND
#13	LEFT SLINGSHOT	Q13		YEL-VIO	J10-P9/10	50VDC	BLU-GRN	J8-P6	26-1200 090-5044-ND
#14	RIGHT SLINGSHOT	Q14		YEL-VIO	J10-P9/10	50VDC	BLU-BLU	J8-P7	26-1200 090-5044-ND
#15	**LEFT FLIPPER (50V RED/YEL)**	Q15		GRY-YEL-3A Fuse-RED-YEL	J10-P6/7	50VDC	ORG-GRY	J8-P8	22-1080 090-5032-ND
#16	**RIGHT FLIPPER (50V RED/YEL)**	Q16		GRY-YEL-3A Fuse-RED-YEL	J10-P6/7	50VDC	ORG-VIO	J8-P9	22-1080 090-5032-ND

Low Current Coils Group 1		Drive Transistor	Driver Output PCB	Power Line Color	Power Line Connection	Power Voltage	Drive Transistor Control Line Color	D.T. Control Line Connect	Coil GA-Turn or Bulb Type
#17	FLASH: LEFT SIDE (X2)	Q17	▲ I/O Power Driver ▼	ORG	J6-P10	20VDC	VIO-BRN	J7-P2	# 89 BULB 165-5000-89
#18	FLASH: RIGHT SIDE	Q18		ORG	J6-P10	20VDC	VIO-RED	J7-P3	# 89 BULB 165-5000-89
#19	FLASH: DISC CLEAR (X2)	Q19		ORG	J6-P10	20VDC	VIO-ORG	J7-P4	# 89 BULB 165-5000-89
#20	FLASH: DISC BLUE (X2)	Q20		ORG	J6-P10	20VDC	VIO-YEL	J7-P6	# 89 BULB 165-5000-89
#21	FLASH: WOLVERINE	Q21		ORG	J6-P10	20VDC	VIO-GRN	J7-P7	# 89 BULB 165-5000-89
#22	FLASH: MAGNETO (LEFT/RIGHT) (X2)	Q22		ORG	J6-P10	20VDC	VIO-BLU	J7-P8	# 89 BULB 165-5000-89
#23	DISC MOTOR POWER	Q23		BRN	J7-P1	20VDC	VIO-BLK	J7-P9	RELAY 190-5004-00
#24	OPTIONAL (e.g. COIN METER)	Q24		RED	J16-P4-8	5VDC	VIO-GRY	J7-P10	COIN METER

Low Current Coils Group 2		Drive Transistor	Driver Output PCB	Power Line Color	Power Line Connection	Power Voltage	Drive Transistor Control Line Color	D.T. Control Line Connect	Coil GA-Turn or Bulb Type
#25	FLASH: POP BUMPER	Q25	▲ I/O Power Driver ▼	ORG	J6-P10	20VDC	BLK-BRN	J6-P1	# 89 BULB 165-5000-89
#26	ORBIT DIVERTER	Q26		BRN	J7-P1	20VDC	BLK-RED	J6-P2	24-940 090-5036-ND
#27	ICEMAN MOTOR	Q27		BRN	J7-P1	20VDC	BLK-ORG	J6-P3	MOTOR 041-5113-00
#28	FLASH: BACKPANEL (LEFT) (X3)	Q28		ORG	J6-P10	20VDC	BLK-YEL	J6-P4	# 89 BULB 165-5000-89
#29	FLASH: BACKPANEL (RIGHT) (X3)	Q29		ORG	J6-P10	20VDC	BLK-GRN	J6-P5	# 89 BULB 165-5000-89
#30	FLASH: MAGNETO SPOT LIGHT	Q30		ORG	J6-P10	20VDC	BLK-BLU	J6-P6	# 161 BULB 165-5032-00
#31	FLASH: BOTTOM ARCH (X2)	Q31		ORG	J6-P10	20VDC	BLK-VIO	J6-P7	# 89 BULB 165-5000-89
#32	FLASH: MAGNETO FIGURE	Q32		ORG	J10-P8	20VDC	BLK-GRY	J6-P8	# 161 BULB 165-5032-00

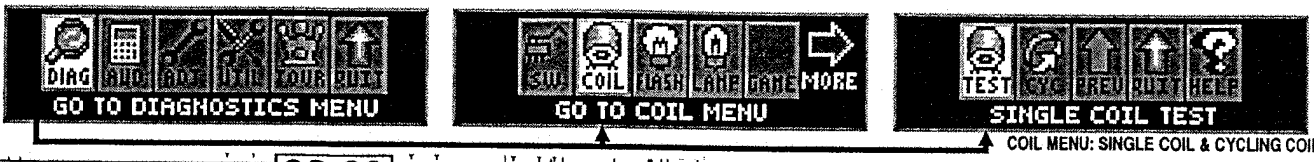

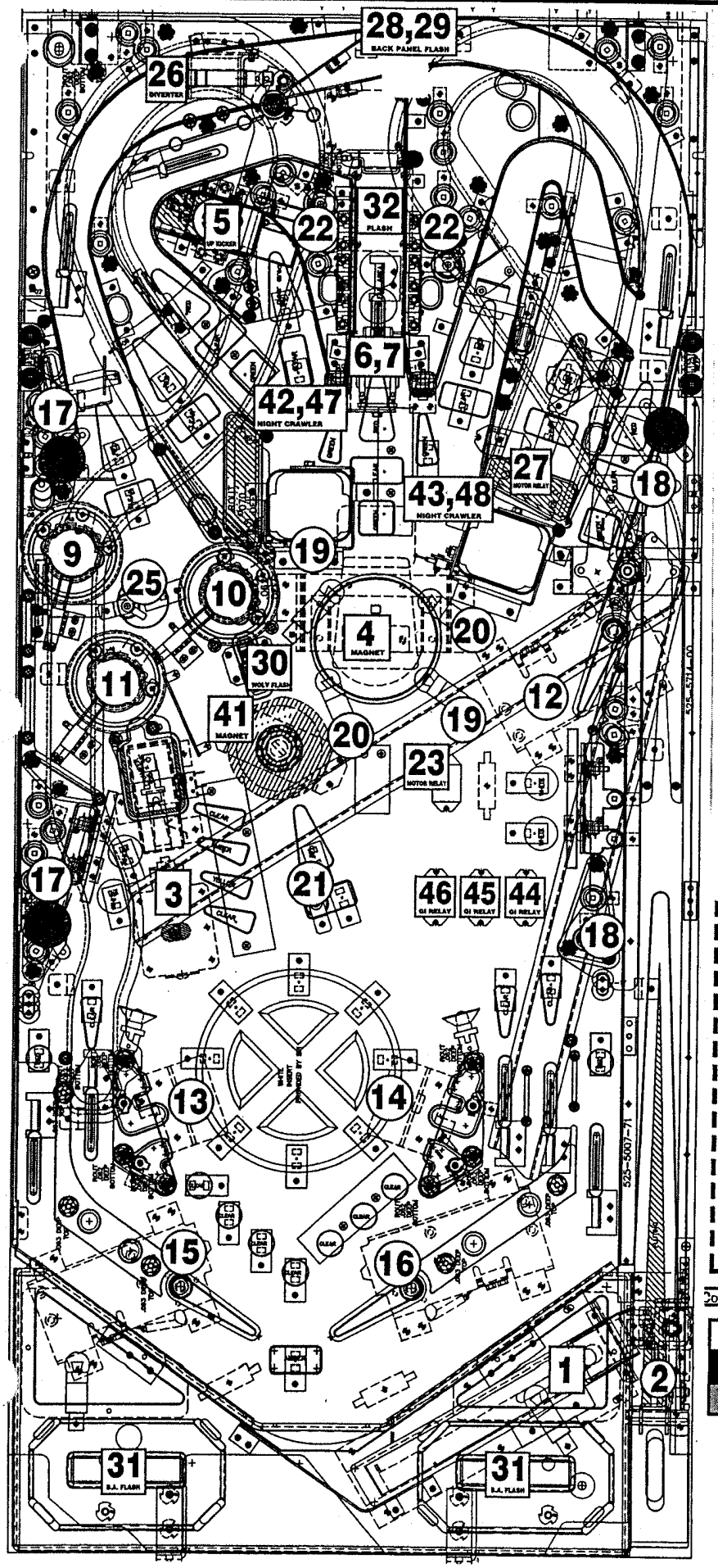

Typical Coil Wiring & Schematic

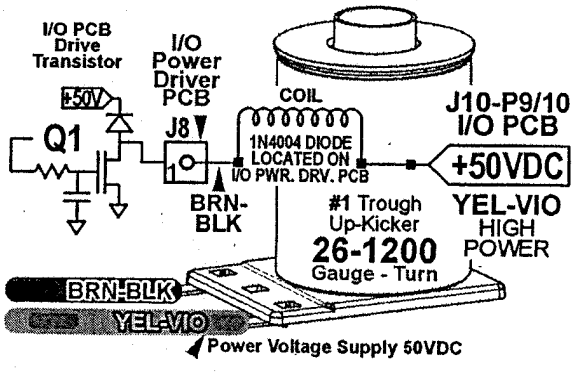

Color = Color of Mini-Mars or Flash Lamp Bulb.

= Coils / Flash Lamps above Playfield.

= Coils / Flash Lamps below Playfield.

= Coils / Flash Lamps on Back Panel.

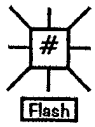

Coil Q24 is Optional. If either a Coin Meter, Token Dispenser or Knocker (all optional equipment) is required, call Technical Support for more information, 1-800-542-5377 or 1-708-345-7700.

COILS DETAILED CHART TABLE

	HIGH CURRENT COILS GROUP 1	Drive Transistor	Power Line Color	Power Line Connection	Power Voltage	Driver Transistor Control Line Color	Coil GA-Turn or Bulb Type
#41	WOLVERINE MAGNET	Q41	VIO-YEL	J2-P8	50VDC	ORG-BRN	22-650
#42	LEFT NIGHTCRAWLER UP	Q42	VIO	J2-P7	50VDC	ORG-RED	090-5076-00 23-1100
#43	RIGHT NIGHTCRAWLER UP	Q43	VIO	J2-P6	50VDC	ORG-BLK	090-5030-ND 23-1100
#44	RELAY (WHITE)	Q44	BRN	J2-P5	20VDC	ORG-YEL	090-5030-ND RELAY
#45	RELAY (RED)	Q45	BRN	J2-P4	20VDC	ORG-GRN	190-5004-00 RELAY
#46	RELAY (BLUE)	Q46	BRN	J2-P3	20VDC	ORG-BLU	190-5004-00 RELAY
#47	LEFT NIGHTCRAWLER LATCH	Q47	VIO	J2-P2	50VDC	ORG-VIO	190-5004-00 ASSY.
#48	RIGHT NIGHTCRAWLER LATCH	Q48	VIO	J2-P1	50VDC	ORG-GRY	515-7595-00-ND ASSY. 515-7595-00-ND

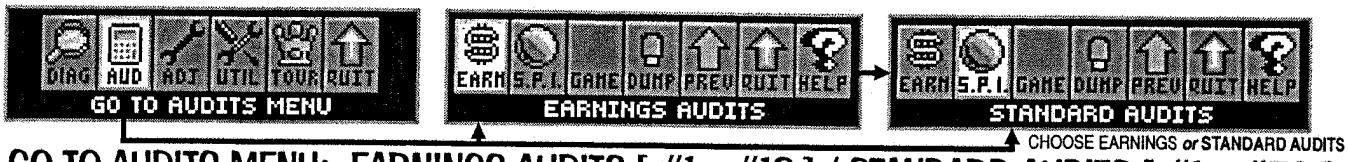

GO TO AUDITS MENU: EARNINGS AUDITS [#1 – #13] / STANDARD AUDITS [#1 – #59]

Perform the below steps to review the audits. Enter the **SERVICE MENU**, then enter the **EARNINGS AUDITS** *or* **STANDARD AUDITS MENUS**. *For audit definitions or summary, review the Audits Section (**GO TO AUDITS MENU**). Try the **"DUMP AUDITS TO USB"** Feature to create a text file of your audits. Don't forget to set the DATE & TIME in the **UTILITIES MENU**. See the Utilities Section (**GO TO UTILITIES MENU**).*

Step 1 Press [**SELECT**].
Press [BACK] to exit for escape at any time.

Step 2 Press [>]. Go to the "AUD" *Icon.*
Press [**SELECT**].

Step 3 Press [>]. Go to the "EARN" *or* "S.P.I." *Icon.*
Press [**SELECT**].

Step 4 Press [<] [>] to move between audits.

EARNINGS AUDITS [#1 – #13] ▼

Nr.	EARNINGS AUDIT NAME	YOUR RESULT
1	TOTAL PAID CREDITS	
2	FREE GAME PERCENTAGE	
3	AVERAGE BALL TIME	
4	AVERAGE GAME TIME	
5	COINS THROUGH LEFT SLOT	
6	COINS THROUGH RIGHT SLOT	
7	COINS THROUGH CENTER SLOT	

Nr.	EARNINGS AUDIT NAME	YOUR RESULT
8	COINS THROUGH FOURTH SLOT	
9	COINS THROUGH FIFTH SLOT	
10	TOTAL COINS	
11	TOTAL EARNINGS	
12	METER CLICKS	
13	SOFTWARE METER	

STANDARD AUDITS [#1 – #59] ▼

Nr.	STANDARD AUDIT NAME	YOUR RESULT
1	TOTAL BALLS PLAYED	
2	TOTAL EXTRA BALLS	
3	EXTRA BALL PERCENTAGE	
4	REPLAY 1 AWARDS	
5	REPLAY 2 AWARDS	
6	REPLAY 3 AWARDS	
7	REPLAY 4 AWARDS	
8	TOTAL REPLAYS	
9	REPLAY PERCENTAGE	
10	TOTAL SPECIALS	
11	SPECIAL PERCENTAGE	
12	TOTAL MATCHES	
13	HIGH SCORE AWARDS	
14	HIGH SCORE PERCENT	
15	TOTAL FREE PLAYS	
16	TOTAL PLAYS	
17	0.0M – 1.99M SCORES	
18	2.0M – 3.99M SCORES	
19	4.0M – 5.99M SCORES	
20	6.0M – 7.99M SCORES	

Nr.	STANDARD AUDIT NAME	YOUR RESULT
21	8.0M – 9.99M SCORES	
22	10.0M – 12.49M SCORES	
23	12.5M – 14.99M SCORES	
24	15.0M – 17.49M SCORES	
25	17.5M – 19.99M SCORES	
26	20.0M – 24.99M SCORES	
27	25.0M – 29.99M SCORES	
28	30.0M – 39.99M SCORES	
29	40.0M – 49.99M SCORES	
30	50.0M – 74.99M SCORES	
31	75.0M – 99.99M SCORES	
32	100.0M – 149.99M SCORES	
33	150.0M+ SCORES	
34	AVERAGE SCORES	
35	SERVICE CREDITS	
36	BALL SEARCH STARTED	
37	LOST BALL FEEDS	
38	LOST BALL GAME STARTS	
39	LEFT DRAINS	
40	CENTER DRAINS	

Nr.	STANDARD AUDIT NAME	YOUR RESULT
41	RIGHT DRAINS	
42	TILTS	
43	TOTAL BALLS SAVED	
44	LEFT FLIPPER USED	
45	RIGHT FLIPPER USED	
46	0 – 1 MINUTE GAMES	
47	1 – 1.5 MINUTE GAMES	
48	1.5 – 2 MINUTE GAMES	
49	2 – 2.5 MINUTE GAMES	
50	2.5 – 3 MINUTE GAMES	
51	3 – 3.5 MINUTE GAMES	
52	3.5 – 4 MINUTE GAMES	
53	4 – 5 MINUTE GAMES	
54	5 – 6 MINUTE GAMES	
55	6 – 8 MINUTE GAMES	
56	8 – 10 MINUTE GAMES	
57	10 – 15 MINUTE GAMES	
58	15+ MINUTE GAMES	
59	RECENT REPLAY PERCENT	

Note: Audits are subject to change (with or without notice).

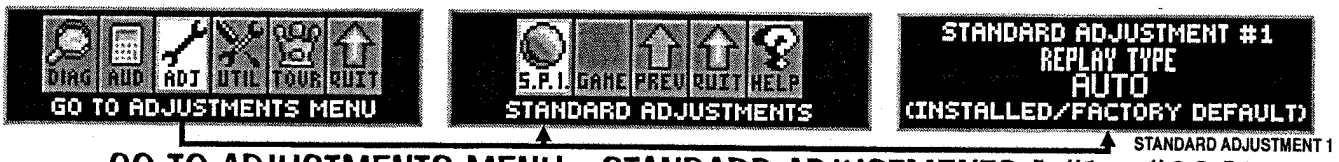

GO TO ADJUSTMENTS MENU: STANDARD ADJUSTMENTS [#1 – #63]

Peform the below steps to review the adjustments. Enter the **ADJUSTMENTS MENU**, then enter the **STANDARD ADJUSTMENTS MENU**. *For adjustment definitions or summary, review the Adjustments Section (**GO TO ADJUSTMENTS MENU**). See Utilities Section (**GO TO INSTALLS MENU**), to easily change all adjustments required depending on the Install Type (Easy, Hard, 5-Ball, Home Play, etc.) desired.*

Step 1 Press **[SELECT]**. Press [BACK] to exit *or* escape at any time.

Step 2 Press [>]. Go to the "ADJ" *Icon.* Press **[SELECT]**.

Step 3 ... "S.P.I." *Icon.* Press **[SELECT]**.

Step 4 **STANDARD ADJUSTMENT #1** appears with the Adjustment Name **[REPLAY TYPE]** flashing. With the Adjustment Name flashing, press [<] [>] to move between adjustments.

Step 5 To change the Adjustment Setting, press **[SELECT]**. With the Adjustment Setting flashing, press [<] [>] repeatedly until the desired setting appears. Press the **[SELECT]** to "install" the change. The Adjustment Comment *(bottom text line)* will indicate **[INSTALLED/FACTORY DEFAULT]**, if the Factory Default Setting is selected *or* **[INSTALLED]** if the change is not the Factory Default Setting.

STANDARD ADJUSTMENTS [#1 – #63] ▼

Nr.	STANDARD ADJUSTMENT NAME	USA DEFAULT	YOUR SETTING
1	REPLAY TYPE	AUTO	
2	‡ REPLAY PERCENTAGE	10%	
3	‡ REPLAY AWARD	CREDIT	
4	‡ REPLAY LEVELS	1	
5	‡ AUTO REPLAY START	__,000,000	
6	‡ DYNAMIC REPLAY START	60,000,000	
7	‡ REPLAY LEVEL #1	15,000,000	
8	‡ REPLAY LEVEL #2	30,000,000	
9	‡ REPLAY LEVEL #3	45,000,000	
10	‡ REPLAY LEVEL #4	60,000,000	
11	‡ REPLAY BOOST	YES	
12	SPECIAL LIMIT	1	
13	‡ SPECIAL PERCENTAGE	10%	
14	SPECIAL AWARD	CREDIT	
15	FREE GAME LIMIT	5	
16	EXTRA BALL LIMIT	5	
17	‡ EXTRA BALL PERCENTAGE	25%	
18	GAME PRICING	USA 10	
19	MATCH PERCENTAGE	9%	
20	MATCH AWARD	CREDIT	
21	BALLS PER GAME	3	
22	TILT WARNINGS	2	
23	CREDIT LIMIT	30	
24	ALLOW HIGH SCORES	YES	
25	HIGH SCORE AWARD	CREDIT	
26	GRAND CHAMPION AWARDS	1	
27	HIGH SCORE #1 AWARDS	1	
28	HIGH SCORE #2 AWARDS	0	
29	HIGH SCORE #3 AWARDS	0	
30	HIGH SCORE #4 AWARDS	0	
31	GRAND CHAMPION SCORE	__,000,000	

Nr.	STANDARD ADJUSTMENT NAME	USA DEFAULT	YOUR SETTING
32	HIGH SCORE #1	__,000,000	
33	HIGH SCORE #2	__,000,000	
34	HIGH SCORE #3	__,000,000	
35	HIGH SCORE #4	__,000,000	
36	HSTD INITIALS	3 INITIALS	
37	HSTD RESET COUNT	2000	
38	FREE PLAY	NO	
39	LANGUAGE	ENGLISH	
40	PLAYER LANGUAGE SELECT	YES	
41	CUSTOM MESSAGE	ON	
42	FLASH LAMP POWER	NORMAL	
43	COIL PULSE POWER	NORMAL	
44	KNOCKER VOLUME	NORMAL	
45	GAME RESTART	YES	
46	BILL VALIDATOR	NO	
47	MUSIC VOLUME	1	
48	BALL SAVE TIME	0:05	
49	TIMED PLUNGER	OFF	
50	FLIPPER BALL LAUNCH	OFF	
51	COINDOOR BALL SAVER	NO	
52	COMPETITION MODE	NO	
53	CONSOLATION BALL	YES	
54	FAST BOOT	YES	
55	Q24 OPTION	COIN METER	
56	TICKET DISPENSER	NO	
57	PLAYER COMPETITION	YES	
58	TEAM SCORES	NO	
59	LOCATION ID	0	
60	GAME ID	0	
61	TIME FORMAT	12-HOUR	
62	COIN INPUT DELAY	30	
63	LOST BALL RECOVERY	YES	

Factory Defaults Settings are subject to change during production *(especially Standard Adjustments 2, 4, 5, 13, 16-17, 19, 31-35 & 47).*
‡ Not all Standard Adjustments are shown. Depending on the setting (whether Factory Default or if changed by the operator), associated adjustments do not appear, if not required. ***Note:*** *If **Game Dip Switch** other than USA is installed, different Defaults will appear.*

GO TO AUDITS MENU: FEATURE AUDITS [#1 – #+]

Perform the below steps to review the audits. Enter the **AUDITS MENU**, then enter the **FEATURE AUDITS MENU**. *Try the "**DUMP AUDITS TO USB**" Feature to create a text file of your audits. *Don't forget to set the DATE & TIME in the **UTILITIES MENU**. See Utilities Section (**GO TO UTILITIES MENU**), for more information.*

Step 1 Press **[SELECT]**. Press [BACK] to exit *or* escape at any time.

Step 2 Press [>]. Go to the "AUD" *Icon.* Press **[SELECT]**.

Step 3 Press [>]. Go to the "GAME" *Icon.* Press **[SELECT]**.

Step 4 Press [<] [>] to move between audits.

% = AUDIT RESULT DIVIDED BY STANDARD AUDIT 16 (TOTAL PLAYS).

Feature Audits are subject to change *(with or without notice).* **View Feature Audits on the Dot Display only.** To export all audits to your memory stick *(creating a text file),* perform the following. Enter the **AUDITS MENU**, then enter the **DUMP AUDITS TO USB**. ***Note:*** *The "DUMP" Icon can also be accessed in the **USB MENU** via the **UTILITIES MENU** (see the Utilities Section (**GO TO USB MENU**) for details).*

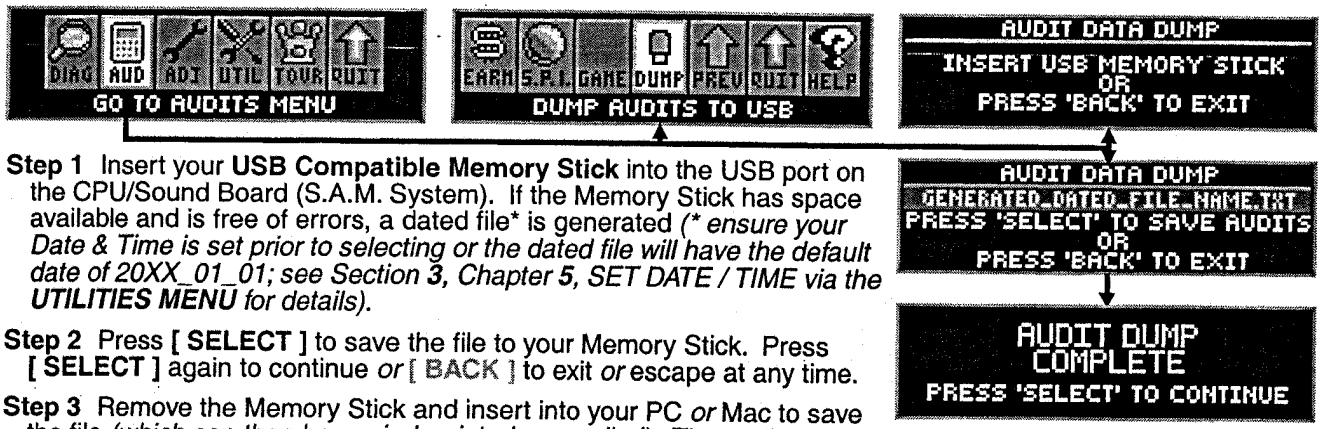

Step 1 Insert your **USB Compatible Memory Stick** into the USB port on the CPU/Sound Board (S.A.M. System). If the Memory Stick has space available and is free of errors, a dated file* is generated *(* ensure your Date & Time is set prior to selecting or the dated file will have the default date of 20XX_01_01; see Section **3**, Chapter **5**, SET DATE / TIME via the **UTILITIES MENU** for details).*

Step 2 Press **[SELECT]** to save the file to your Memory Stick. Press **[SELECT]** again to continue *or* [BACK] to exit *or* escape at any time.

Step 3 Remove the Memory Stick and insert into your PC *or* Mac to save the file *(which can then be copied, printed or emailed).* The audits are numbered sequentially ***without*** a number restart between the three types of audits *(Earnings, Standard and Feature).*

GO TO ADJUSTMENTS MENU: FEATURE ADJUSTMENTS [#1 – #+]

Peform the below steps to review the adjustments. Enter the **SERVICE MENU**, then enter the **FEATURE ADJUSTMENTS MENU**. *For adjustment definitions or summary, review the Adjustments Section (**GO TO ADJUSTMENTS MENU**). See Utilities Section (**GO TO INSTALLS MENU**), to easily change all adjustments required depending on the Install Type (Easy, Hard, 5-Ball, Home Play, etc.) desired.*

Step 1 Press **[SELECT]**. Press [BACK] to exit or escape at any time.

Step 2 Press [>]. Go to the "ADJ" *Icon.* Press **[SELECT]**.

Step 3 Press [>]. Go to the "GAME" *Icon.* Press **[SELECT]**.

Step 4 **FEATURE ADJUSTMENT #1** appears with the Adjustment Name **[FEATURE ADJ. NAME]** flashing. With the Adjustment Name flashing, press [<] [>] to move between adjustments.

Step 5 To change the Adjustment Setting, press **[SELECT]**. With the Adjustment Setting flashing, press [<] [>] repeatedly until the desired setting appears. Press the **[SELECT]** to "install" the change. The Adjustment Comment *(bottom text line)* will indicate **[INSTALLED/FACTORY DEFAULT]**, if the Factory Default Setting is selected *or* **[INSTALLED]** if the change is not the Factory Default Setting.

Feature Adjustments are subject to change *(with or without notice).* **View Feature Adjustments on the Dot Display only.** Use the Installs Menu *(via the **UTILITIES MENU**)* to automatically change a select group of Feature Adjustments *(see the Utilities Section) or* adjust them one-by-one.

POWER REQUIREMENTS

This game ***must be connected to a properly grounded outlet to reduce shock hazard*** *and* insure proper game operation. *See the Yellow Pages (Schematics & Wiring), for transformer connections required for* ***Normal, High,*** *and* ***Low Line*** *conditions.*

Normal Line:	110v AC - 125v AC @ 60Hz	
Domestic use an 8AMP 250v Slo-Blo Fuse.	**AVG OPERATION** CURRENT: **2.8AMP** WATTAGE: **329W**	**MAX OPERATION** CURRENT: **8AMP** WATTAGE: **940W**
High Line:	218v AC - 240v AC @ 50Hz	
Export use 2x 5AMP 250v Slo-Blo Fuses. (*England & Hong Kong use an 8AMP 250v S/B Fuse.)	**AVG OPERATION** CURRENT: **1.8AMP** WATTAGE: **412W**	**MAX OPERATION** CURRENT: **5AMP** | **8AMP*** WATTAGE: **1145W** | **1832W*** (England & Hong Kong use an 8A Fuse.)
Low Line:	95v AC - 108v AC @ 50Hz / 60Hz	
Export Japan Only use an 8AMP 250v Slo-Blo Fuse.	**AVG OPERATION** CURRENT: **2.6AMP** WATTAGE: **264W**	**MAX OPERATION** CURRENT: **8AMP** WATTAGE: **812W**

GAME DIMENSIONS

The overall **Front / Back Height** dimensions include the **added 1"** with the ***Leg Levelers*** *turned all the way* ***in.***

**** PLEASE NOTE:*** *The TOURNMENT PLAY Sign or* ***betaBRITE Color Dot Display*** *will add up to* ***4⅜" to the overall Back Height for a total of 79⅝".***

Ceiling Height Requirement:
↺ *An additional* ***1 ½"*** *is required for the rotation (↺) of the Backbox to the upright position.*
The complete Back Height required with Sign *or* Dot Display and rotation: 81"

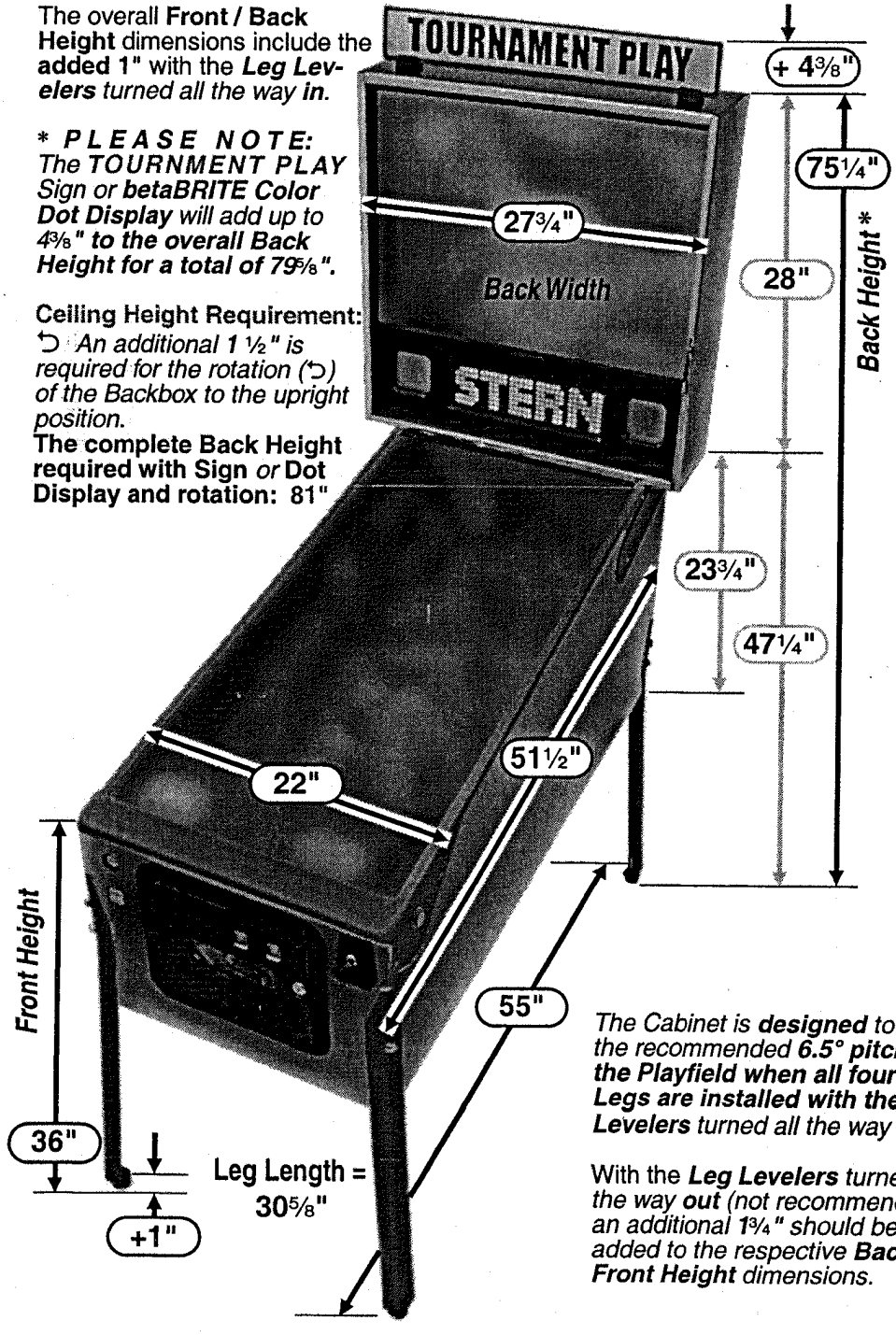

The Cabinet is ***designed*** *to give the recommended* ***6.5° pitch to the Playfield when all four (4) Legs are installed with the Leg Levelers*** *turned all the way* ***in.***

With the ***Leg Levelers*** *turned all the way* ***out*** *(not recommended), an additional* ***1¾"*** *should be added to the respective* ***Back*** *or* ***Front Height*** *dimensions.*

TRANSPORTATION

BEFORE TRANSPORTING

To reduce the possibility of damage, observe ALL precautions whenever transporting the game.

Read & follow *the next page on* ***How to Secure the Backbox for Transporting.*** *Remove the legs and secure the game within the transporting vehicle.*

SAVE AND RETAIN ALL PRINTED INFORMATION INSIDE THE CABINET !

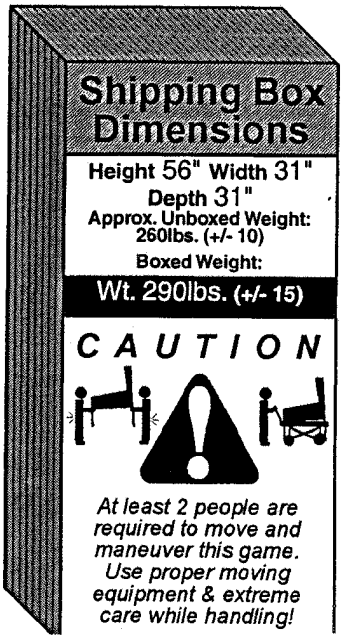

Service Switch X4 Set Access & Use

The **4-Button Service Switch Set** provides access for ***three (3) functions*** available for your use: **1: SERVICE CREDIT, 2: VOLUME [–] / [+]** and **3: SERVICE MENU.**

▼ Service Switch X4 Set ▼

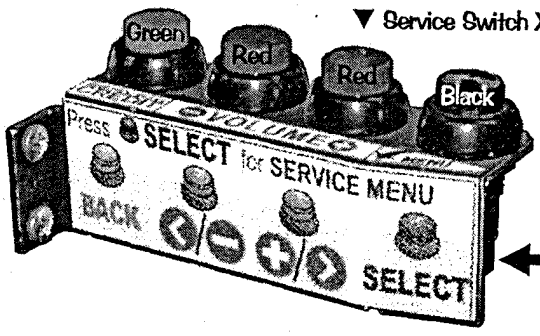

Inside Coin Door

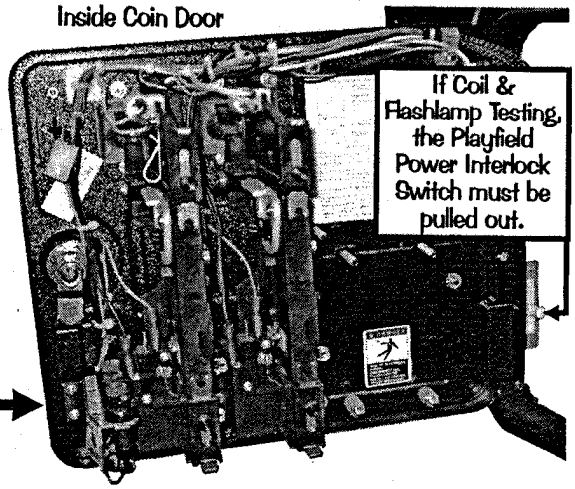

To access any of these ***three (3) functions*** you must first open the **Coin Door** *(see pictorial above)* with the Game in the ***Attract Mode*** *(not already in any Function or Menu stated below) and then follow below.*

*Pushing the GREEN **BUTTON** first.*

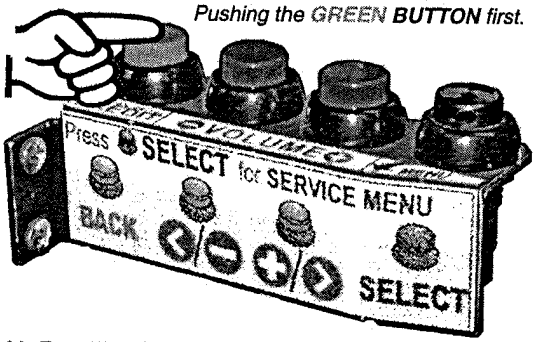

◀ Function 1: SERVICE CREDITS MENU

Pushing the **Green [SERVICE CREDIT] Button** first, adds a ***Service Credit*** per push *(will not affect your audits as "paid" credits).* This is useful for the technician to test games in regular play without affecting the game audits. Each depression adds **1 credit**; up to **50 credits** can be applied. **Standard Adjustment 23, Credit Limit,** determines this, however, it can be changed from 04-50; *for details see the Adjustments Section.*

Note: *Once your credits are added, this menu will **automatically exit** a few seconds after the last button depression or when the* **Green [BACK]** *or* **Black [SELECT] Button** *is pushed. This function is disabled if **Standard Adjustment 38, Free Play**, is set to **YES**. The Service Credits are limited to the Credit Limit in addition to any paid credits present in the game (e.g. If the Credit Limit is 30, with 8 paid credits present, only 22 Credits can be applied.).*

*Pushing either **RED BUTTON** first.*

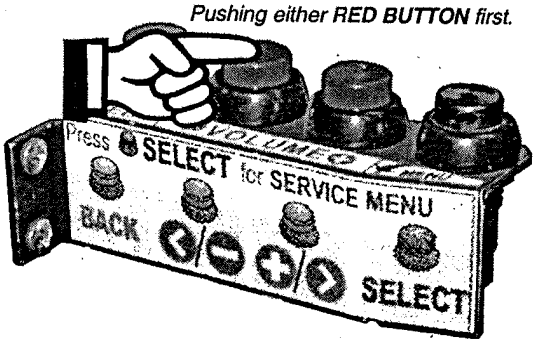

*Pushing either **RED BUTTON** first.*

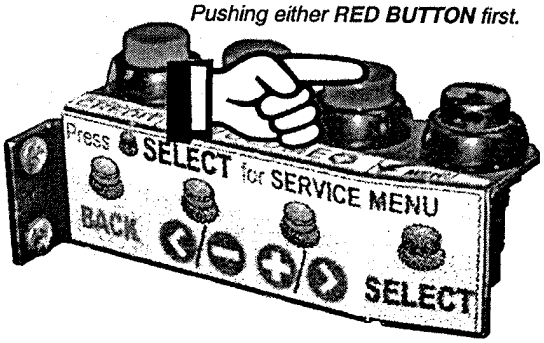

▲ Function 2: VOLUME MENU ▲

Pushing either of the **Red [VOLUME] Buttons** first, enters the ***VOLUME MENU.*** While in this Mode, to **DECREASE** the volume, hold down or depress the **1st Red [< / –] Button** until desired the volume is achieved; to **INCREASE** the volume, hold down or depress the **2nd Red [+ / >] Button** until the desired volume is achieved.

Note: *The volume can be set between* **0-63***; Once your adjustments are made, this menu will **automatically exit** a few seconds after the last button depression or when the* **Green [BACK]** *or* **Black [SELECT] Button** *is pushed.*

*Pushing the **BLACK BUTTON** first.*

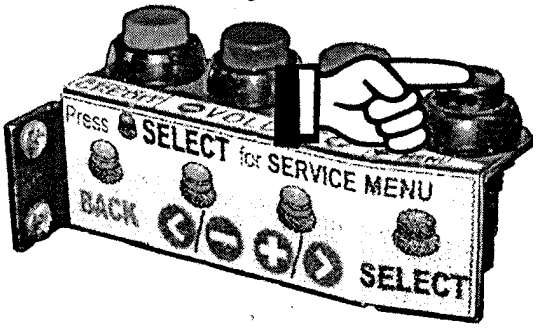

◀ Function 3: SERVICE MENU

Pushing the **Black [SELECT] Button** first, enters the ***SERVICE MENU.*** Once in, navigate through all menus by depressing the **Service Menu Buttons.** Use the **Red [< / –]** *or* **[+ / >] Buttons** to move LEFT / RIGHT, NEXT/PREVIOUS *(audits/adjustments) or* to INCREASE / DESCREASE an adjustment (setting). Use the **Black [SELECT] Button** to select a highlighed *Icon,* move to the next line of text *or* to answer **"OK"** where applicable. Use the **Green [BACK] Button** to exit *or* escape back.

Exit Service Menu

In the **MAIN MENU** and in all **SUB-MENUS** *(where the "QUIT" Icon is present)*, if the "QUIT" *Icon* is selected and *activated*, or the **Green** [BACK] **Button** is selected repeatedly *(depending on which sub-menu you're in...)*, the **SERVICE MENU Session** will be exited and returned to the ***Attract Mode***.

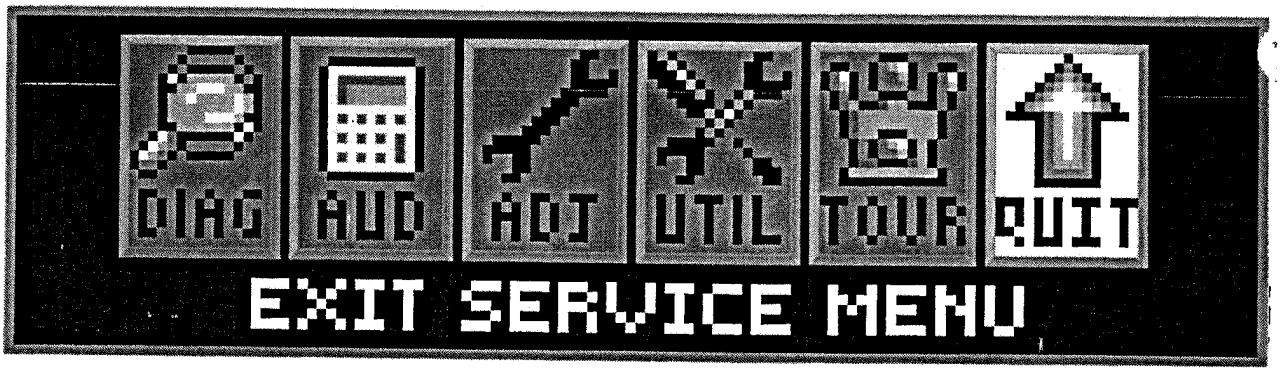

LOOK Turning the game on/off will start the *Power-Up Routine*. Upon **Power-Up**, the DISPLAY will indicate the COUNTRY, FILE VERSION and LANGUAGE(S) installed. LANGUAGE/COUNTRY: change via Dip Switch. LOOK

The below **Problem / Solution Table** was designed to answer some common problems frequently asked.

Problem / Solution Table

PROBLEM	SOLUTION
Will not enter the **SERVICE MENU** after depressing the **Black [SELECT] Button**.	• Check the Service Switches [GREEN, RED (X2) & **BLACK Buttons**] for loose connections or bad ground. • Check the associated wiring harness to/from the CPU/Sound Board, Connector **J13**. • Check CPU/Sound Board for possible failure.
All **Service Buttons** [• • • • **Buttons**] appear nonfunctional.	• Check the Service Switches wiring harness for poor or no connection and/or broken wires.
The **Green Button** in the Attract Mode will not enter the **SERVICE CREDITS MENU** to add Service Credits.	• Check to make sure the Game is not in **"Free Play."** *If the game is set to Free Play, adding Service Credits is not required.* • Check the Service Switches wiring harness for poor or no connection and/or broken wires.
The **Display** "blanks out."	• Check the Dot Matrix Display for loose wiring harness for poor or no connection and/or broken wires. • Check **F1** (3/4A Fuse) on the Display Power Supply Board. *Refer to the Yellow Pages (**SCHEMATICS & TROUBLESHOOTING**).*
Icons *"scroll"* along continuously in the **MAIN MENU**.	• Check for a stuck switch on either of the **Red Buttons**.
The **Start** and **Flipper Buttons** do not select or activate *Icons* in the **SWITCH TEST MENU**.	• This is normal. These switches are deactivated, as they are a part of the Switch Test. *Refer to the Diagnostics Section (**GO TO DIAGNOSTICS MENU, Switch Test**).*
Can't move selection of *Icon* with the **Left** and/or **Right Flipper Buttons**.	• Check the **Flipper Buttons** for loose connections or bad Ground and refer to Section **5**, Chapter **2**, Playfield Wiring, #-Flipper Circuit Wiring Diagram. • This is normal ***only*** in ***Diagnostic's Switch & Active Switch Tests*** *(see previous Problem).*
Some *Icons* appear non-functional in the **MENU** or missing.	• Some functionality of the Service Menu may not have been completed during development. If exists, it should only be a non-critical function, such as the "HELP" *Icon*, which will explain the usage of icons. When completed, a software update will correct the problem. Software updates are announced via Service Bulletins (if critical) and on our website **http://www.sternpinball.com/GAME-code.shtml**; view the Game Code Library Message Board Marquee or click **Previous Messages** for past announcements.
In **COIL TEST MENU**, the coils and flashlamps ***do not*** fire after pressing the **Black [SELECT] Button**.	• Ensure the **POWER INTERLOCK SWITCH** ***is pulled out*** *(see the start of this Chapter).*
In the **SERVICE MENU**, the volume cannot be adjusted with either of the **Red Buttons**.	• The Volume adjustment can only be made when in the **Attract Mode** *(see the start of this Chapter).*
In the **SERVICE MENU**, the display seems to lock up, or the Help Display appears to be non-functional.	• If you cannot clear the situation by exiting back one Menu, exit completely out of the **SERVICE MENU**, and re-enter. If the problem persists, call Technical Support for additional help.

IF YOU NOTE ANY OTHER PROBLEMS or HAVE ANY SYMPTOMS NOT DESCRIBED ABOVE, PLEASE CALL TECHNICAL SUPPORT 800-542-5377 (708-345-7700 OPTION #1), SO WE MAY ASSIST YOU.

THIS PAGE IS BLANK

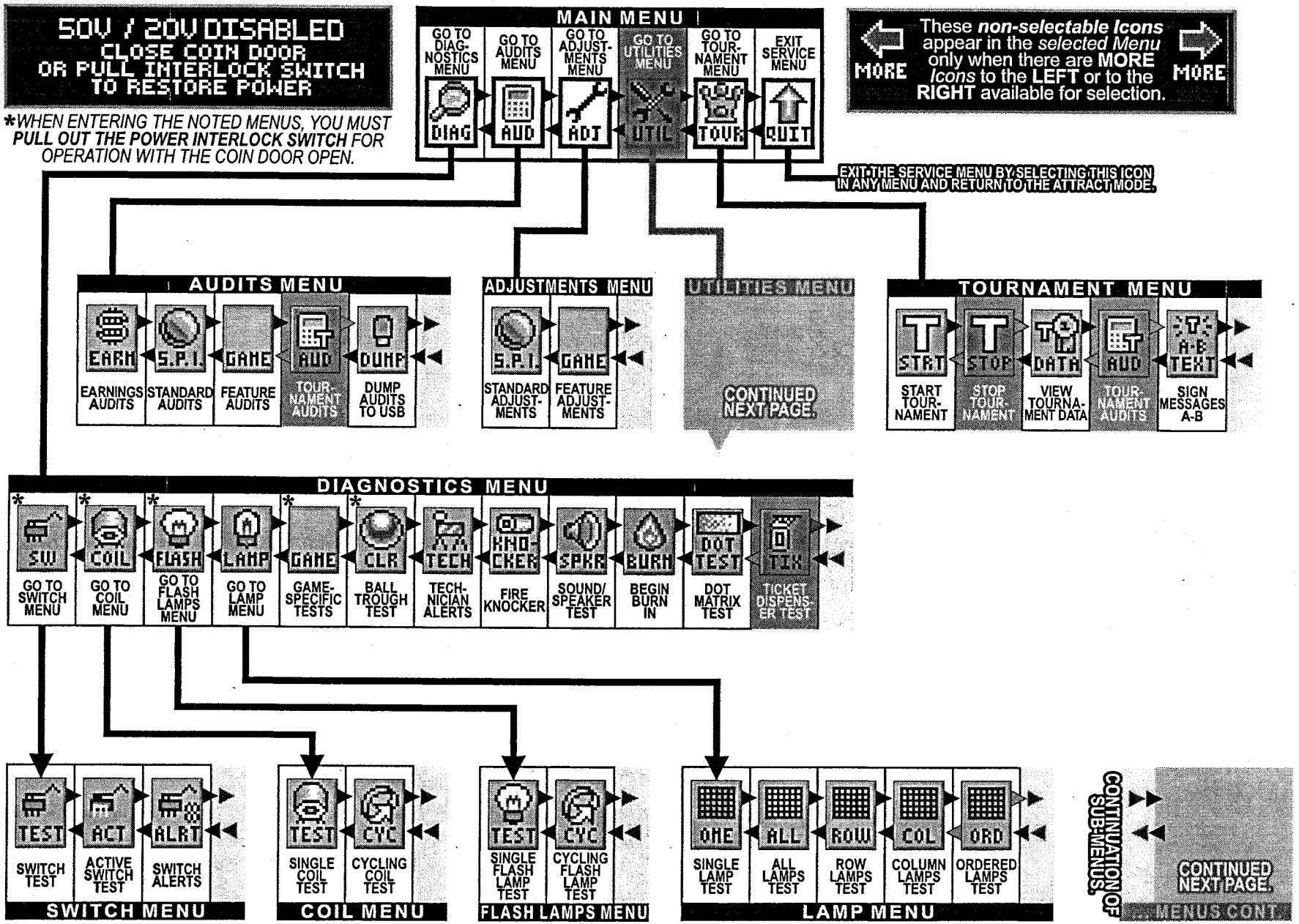
50V / 20V DISABLED
CLOSE COIN DOOR
OR PULL INTERLOCK SWITCH
TO RESTORE POWER
*WHEN ENTERING THE NOTED MENUS, YOU MUST PULL OUT THE POWER INTERLOCK SWITCH FOR OPERATION WITH THE COIN DOOR OPEN.
MAIN MENU
GO TO DIAG-NOSTICS MENU
GO TO AUDITS MENU
GO TO ADJUST-MENTS MENU
GO TO UTILITIES MENU
GO TO TOUR-NAMENT MENU
EXIT SERVICE MENU
DIAG
AUD
ADJ
UTIL
TOUR
QUIT
MORE
These non-selectable Icons appear in the selected Menu only when there are MORE Icons to the LEFT or to the RIGHT available for selection.
MORE
EXIT THE SERVICE MENU BY SELECTING THIS ICON IN ANY MENU AND RETURN TO THE ATTRACT MODE.
AUDITS MENU
EARN
S.P.I.
GAME
AUD
DUMP
EARNINGS AUDITS
STANDARD AUDITS
FEATURE AUDITS
TOUR-NAMENT AUDITS
DUMP AUDITS TO USB
ADJUSTMENTS MENU
S.P.I.
GAME
STANDARD ADJUST-MENTS
FEATURE ADJUST-MENTS
UTILITIES MENU
CONTINUED NEXT PAGE.
TOURNAMENT MENU
STRT
STOP
DATA
AUD
A-B TEXT
START TOUR-NAMENT
STOP TOUR-NAMENT
VIEW TOURNA-MENT DATA
TOUR-NAMENT AUDITS
SIGN MESSAGES A-B
DIAGNOSTICS MENU
SW
COIL
FLASH
LAMP
GAME
CLR
TECH
KNO-CKER
SPKR
BURN
DOT TEST
TIX
GO TO SWITCH MENU
GO TO COIL MENU
GO TO FLASH LAMPS MENU
GO TO LAMP MENU
GAME-SPECIFIC TESTS
BALL TROUGH TEST
TECH-NICIAN ALERTS
FIRE KNOCKER
SOUND/ SPEAKER TEST
BEGIN BURN IN
DOT MATRIX TEST
TICKET DISPENS-ER TEST
TEST
ACT
ALRT
SWITCH TEST
ACTIVE SWITCH TEST
SWITCH ALERTS
SWITCH MENU
TEST
CYC
SINGLE COIL TEST
CYCLING COIL TEST
COIL MENU
TEST
CYC
SINGLE FLASH LAMP TEST
CYCLING FLASH LAMP TEST
FLASH LAMPS MENU
ONE
ALL
ROW
COL
ORD
SINGLE LAMP TEST
ALL LAMPS TEST
ROW LAMPS TEST
COLUMN LAMPS TEST
ORDERED LAMPS TEST
LAMP MENU
CONTINUATION OF SUB-MENUS.
CONTINUED NEXT PAGE.
MENUS CONT.

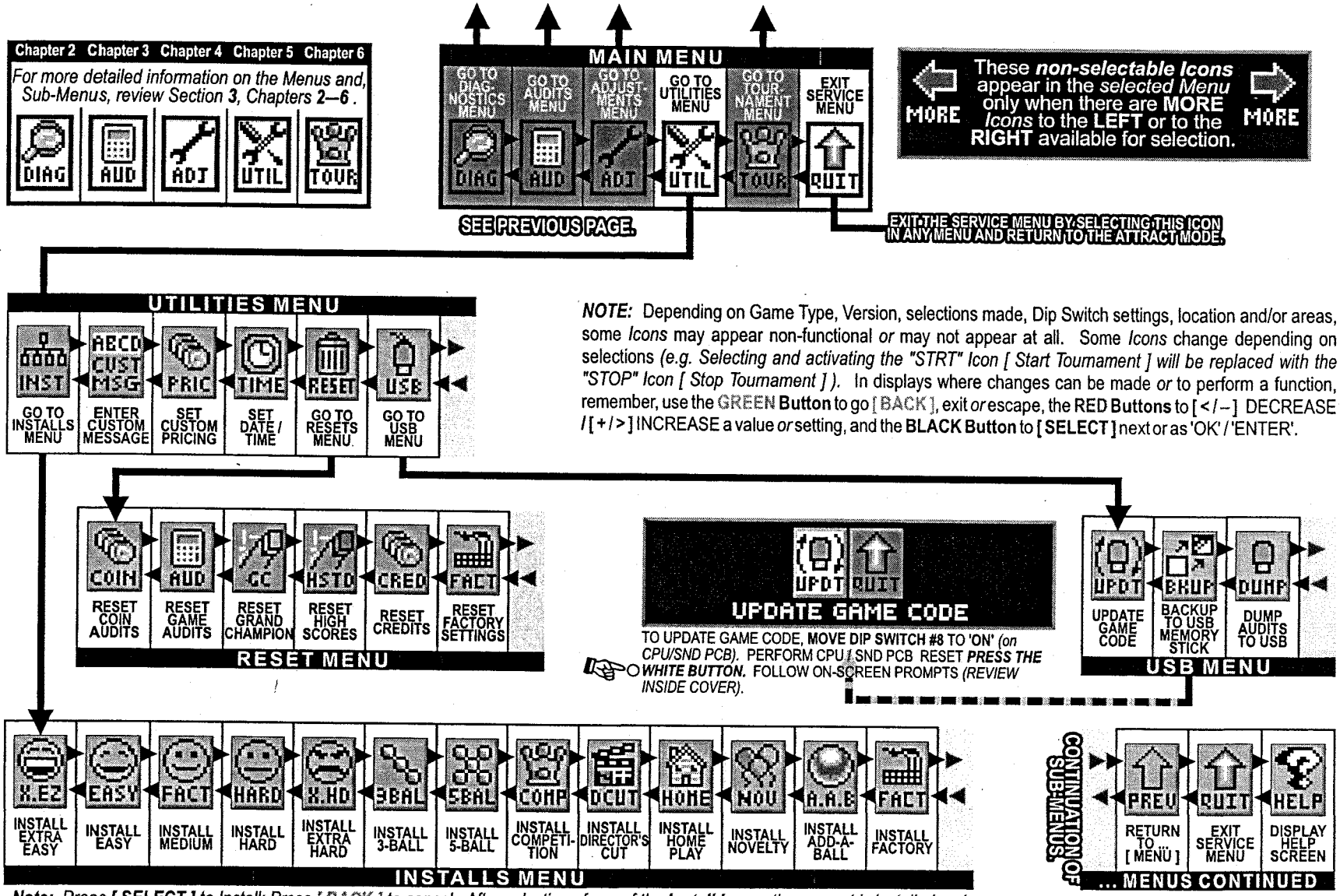

Note: *Press [SELECT] to Install; Press [BACK] to cancel. After selection of any of the* ***Install Icons****, the request is installed and returns to the* ***Install Menu****. The last icon activated before exiting this menu will supercede any previous Icon selected in the group.*

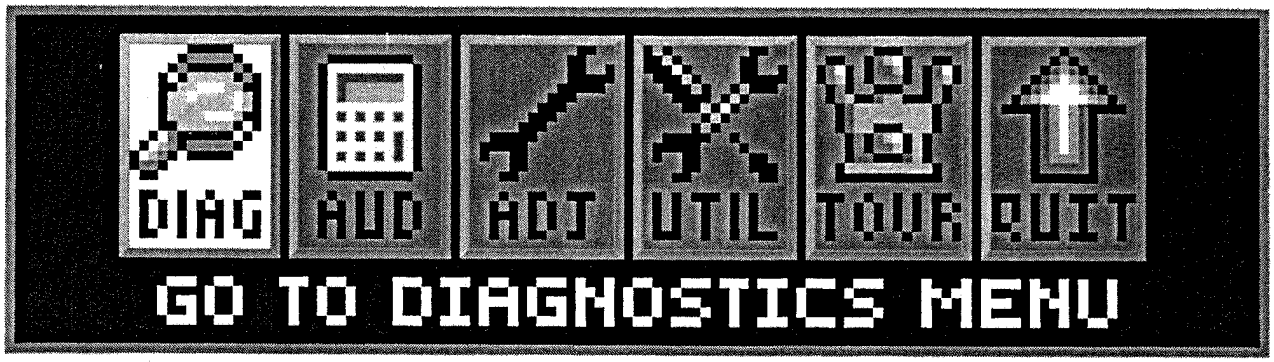

To initiate, from the **MAIN MENU**, select the "DIAG" *Icon*. The **DIAGNOSTICS MENU** provides tests for switches, coils, flash lamps, lamps, sounds and dots in the Dot Matrix Display. Each feature may be tested manually or automatically after entering the **SERVICE MENU** *(see Service Menu Introduction Section)*.
The **[CYCLING COIL TEST] / [FLASH LAMP TEST]** may be used for a quick verification of automatic test functions. The **[SWITCH TEST] / [SINGLE COIL TEST] / [SINGLE LAMP TEST] / [ALL LAMPS TEST] / [ROW LAMPS TEST] / [COLUMN LAMPS TEST] / [FLASH LAMP TEST]** may be used for troubleshooting.

All **DIAGNOSTICS MENU** *Icons* and there usages are explained throughout this chapter in the same order as seen in the Dot Matrix Display. ***NOTE:*** Depending on Game Type, Version, selections made, Dip Switch settings, location and/or areas, some *Icons* may appear non-functional *or* may not appear at all. Some *Icons* change depending on selections *(e.g. Selecting and activating the "STRT" Icon [Start Tournament] will be replaced with the "STOP" Icon [Stop Tournament]).* ***Icons** and/or **functions, order** and **operation are subject to change.***

In displays where changes can be made *or* to perform a function, use the **GREEN Button** to go **[BACK]**, exit *or* escape, the **RED Buttons** to [< / –] MOVE BACK / LEFT / DECREASE / [+ / >] MOVE FORWARD / RIGHT / INCREASE a value *or* setting, and the **BLACK Button** to **[SELECT]** next *or* as "OK / ENTER / ENERGIZE."

Important:** Upon **Power-Up** (Game CPU Reset) or opening the **Coin Door** watch the **Display** for any **Alerts.*

This ***audible / visual alert display*** is shown when the **50V / 20V Power** is disabled *(by opening the Coin Door)*. **PULL OUT THE INTERLOCK SWITCH *ONLY* WHILE IN THE SERVICE MENU FOR COIL OR SWITCH TESTING & BURN-IN WHEN THE COIN DOOR IS REQUIRED TO STAY OPEN FOR SERVICE BUTTON USE!** Pulling out the Power Interlock Switch or pressing the 'escape' **Green [BACK] Button** will remove the alert display. Initial display presentation is accompanied by 3 audible tones *(the bright display warning will go dim after approximately 30 seconds).*

This ***alert display*** is shown momentarily during **Game Mode** or **Power-Up** to alert the operator of a device malfunction *(device or mechanism doesn't energize or is energized repeatedly).* **OPERATOR ALERT!** works by monitoring any *switch activated device* that has the potential to trap a ball when disabled *(e.g. in the Shooter Lane, Scoop or Eject Holes, etc.).* This alert can also appear if a switch associated with a device *(e.g. Ball Trough, Auto Plunger, etc.)* is stuck closed *(caused by a switch jam or stuck ball)*; the game will activate the device a predetermined number of times and if the problem is still detected, this device *or* switch will be noted in **Switch Alerts** *(next page)* and/or **Technician Alerts.**

Upon entering the **SERVICE MENU**, if an asterisk " * " is displayed after the words "SERVICE MENU," the game has detected possible faulty devices, switches and/or missing pinballs. Press the either of the **Red Buttons** *(short-cut to the TECHNICIAN ALERTS MENU) or* continue into the **SERVICE MENU** *(press the **Black Button** again),* select the "DIAG" *Icon* and "TECH" *Icon* for the **Technician Alerts** information.

CAUTION! Remove all pinballs from the Ball Trough prior to lifting the playfield to it's full upright position for servicing. **PULL OUT** the **Power Interlock Switch** for operation. To eject pinballs, select the "DIAG" *Icon* from the **MAIN MENU** to enter the **DIAGNOSTICS MENU**. Select the "CLR" *Icon* to enter the **BALL TROUGH TEST MENU**. Press the **Black [SELECT] Button.** To return to the **DIAGNOSTICS MENU**, press the **Green [BACK] Button.** *This feature also useful to retrieve a pinball for game testing in **Switch** or **Coil Tests.***

Go To Switch Menu

To initiate, from the **DIAGNOSTICS MENU**, select the "SW" *Icon*. Switches are configured in an 4 X 16 Matrix of Rows [Switch Drives] and Columns [Sw. Returns] with up to **64** possible switches. Dedicated Switches are configured in a 2 X 16 Matrix of Rows [Dedicated Sw. Drives / Ground] and Column [Ded. Switch Returns] with up to **32** possible dedicated switches *(includes the 8 dip switch positions)*. The **SWITCH TEST MENU** consists of three (3) parts: **Switch & Active Switch Tests** and **Switch Alerts** to test ***all*** switches.

Reminder: *The **Flipper & Start Buttons** (part of Switch Tests) are temporarily disabled as **Service Menu Navigation Buttons** during these test(s) so they can be tested and shown on-screen. Pressinng the **Green [BACK] Button** (Dedicated Switch **D-21**), Light Green-Black / Black (GND), will exit **Switch Test** or **Active Switch Test**.*

Switch Test

To initiate, from the **SWITCH MENU**, select the "TEST" *Icon*. Ensure the **Power Interlock Switch** is pulled out if testing with the Coin Door open and the activation of coils is required. Upon entering **Switch Test**, you will notice that some switches are already indicated as closed. In the examples, the 4-Ball Trough Switches **#18, #19, #20** & **#21** are shown closed *(pinballs at rest in the ball trough)*, along with the Flipper E.O.S. Dedicated Switches **D-10** & **D-12** (End-of-Stroke Switches are 'normally closed'). If the game has more flippers with E.O.S. Dedicated Switches, CPU Dip Switch Setting *other than* 1-8 OFF or switches stuck closed, more dots will be indicated *(enter **Active Switch Test** to reveal the names)*.

Upon entering **Switch Test**, you will notice that some switches are already indicated as 'closed'. ▼

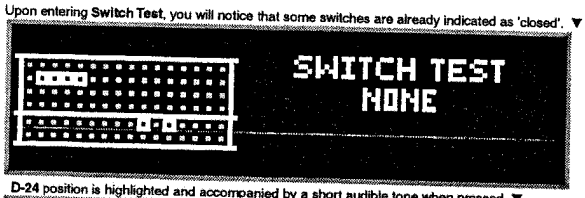

D-24 position is highlighted and accompanied by a short audible tone when pressed. ▼

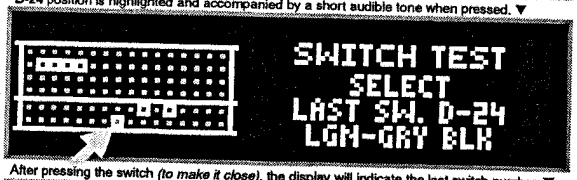

After pressing the switch *(to make it close)*, the display will indicate the last switch number. ▼

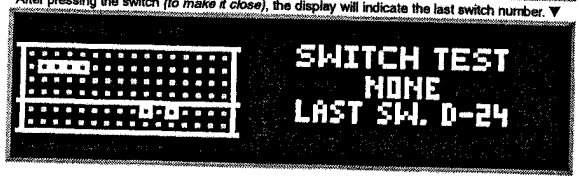

In **Switch Test**, close each switch and observe the display *(switch closure is accompanied by a short audible tone)*. In the example, the **Black [SELECT] Button** Dedicated Switch **D-24** is pressed. The Dot Matrix Display will light up *(highlight)* the corresponding *dot* in the on-screen matrix, display the *switch name, switch number* and the *Switch Drive / Return wire colors*. When not closing a switch, the display indicates **NONE** and the last switch number closure. For the Switch Matrix Grid and Dedicated Switch Grid, see **Find-It-In-Front: Dr. Pinball, DR. 4** *or* escape out of this test and enter **Active Switch Test** *(described below)* to view the names of the switches closed. ***Note:*** *Pressinng the **Green [BACK] Button** (Ded. Switch **D-21**), Lt. Green-Black / Black (GND), will exit the **Switch Test**.*

CAUTION! COIL MECHANISMS WHEN ACTIVATED HAVE FAST MOVING PARTS! While performing **Switch Test** with the Coin Door closed *or* open *(with the Power Interlock Switch is pulled out)*, **DO NOT USE YOUR FINGER** to test switches which are associated with a coil mechanism such as a Vertical Up-Kicker *(hole with a switch)*, Slingshots, Bumpers, etc..

Active Switch Test

To initiate, from the **SWITCH MENU**, select the "ACT" *Icon*. In **Active Switch Test**, if any switches are stuck closed *(or normally closed from the presence of pin-ball(s) as in the Ball Trough)*, the display will flash the corresponding dot(s) in the on-screen matrix, display the *name* and the *Switch Drive / Return wire colors*. If more than one switch is closed, the switch information will change with each switch. This cycle continues until all switches are cleared *or* until **Active Switch Test** is exited. In the example, the **Black [SELECT] Button** Dedicated Switch **D-24** is pressed and held down. The display will cycle and flash each dot, naming each switch which is closed. To determine the *switch number,* compare the highlighted dot to the same position in the Switch Matrix Grid at the beginning of this manual.

Typical Switch Wiring & Schematic

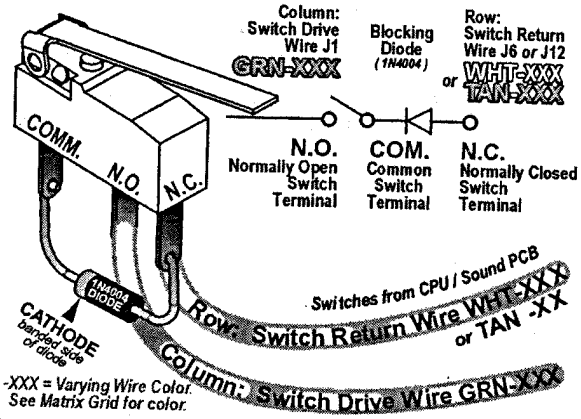

Dedicated Switch Schematic

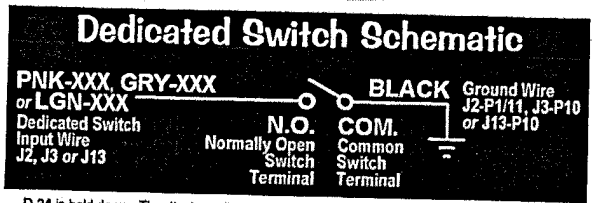

... D-24 is held down. The display will cycle and flash each dot, naming each switch ... closed. ▼

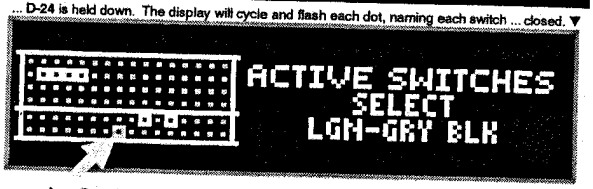

Switch Alerts

To initiate, from the **SWITCH MENU**, select the "ALRT" *Icon*. In **Switch Alerts Menu**, possible inoperable switches are marked with an "X" (OUT OF SERVICE). Mark switches **IN** *or* **OUT OF SERVICE** by pressing the **Black Button** while the intended switch is highlighted and change with either of the **Red Buttons**. Switches which are determined as "OUT OF SERVICE" by the game *or* manually, will be automatically marked as "IN SERVICE" as soon as the game determines a valid switch closure *(after adjusting, fixing or replacing the switch, then testing/actuating the switch)*. ***Note:*** *A **Factory Reset** will also put the switch back "IN SERVICE" in which the game will need to redetermine if the switch should be marked **OUT OF SERVICE**.*

Go To Coil Menu

To initiate, from the **DIAGNOSTICS MENU**, select the "COIL" *Icon.* Coils **#01 – #16** are typically High Current Coils *(although Low Current Coils may be used in these positions & will be noted).* Coils **#17 – #32** are typically Low Current Coils. Flash Lamps are typically used in positions **#25 – #32** *(although Flash Lamps may be used in any position and will be noted).* Auxiliary Coils may be used in positions **#33 – #35.**

Remember, use the **GREEN Button** to go **[BACK]**, exit *or* escape, the **RED Buttons** to [< / –] GO BACK [+ / >] GO FORWARD, and the **BLACK Button** to **[SELECT]** ENERGIZE the coil *(solenoid)* or flash lamp.

Single Coil Test

To initiate, from the **COIL MENU**, select the "TEST" *Icon.* Ensure the **Power Interlock Switch** is pulled out if testing with the Coin Door open. Upon entering **Single Coil Test**, you will notice the #1 coil is shown. The Dot Matrix Display will indicate the *coil or flash lamp name, coil (solenoid) or flash lamp number* and the *Coil or Flash Lamp Power Line / Drive Transistor Control Line wire colors.* To determine the "Pin-Outs" from the I/O Power Driver Board, the Coil Voltage Gauge-Turns *(e.g. 23-800)* or lamp type *(e.g. #89 or #906 Bulb)*, view the Coils Detailed Chart Table at the beginning of this manual *or* for more on troubleshooting and diagnosing, see the Yellow Pages *(Schematics & Wiring).*

Typical Coil Wiring & Schematic

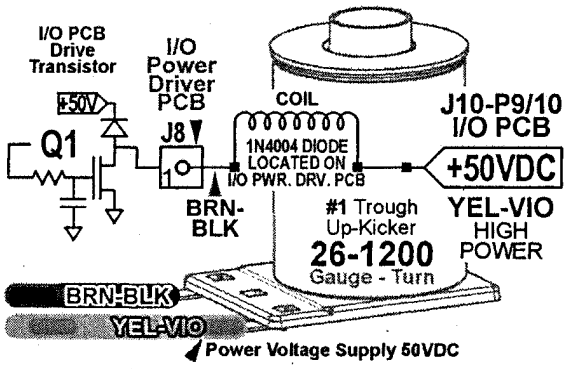

Cycling Coil Test

To initiate, from the **COIL MENU**, select the "CYC" *Icon.* Ensure the **Power Interlock Switch** is pulled out if testing with the Coin Door open. The test pulses each regular coil or flash lamp sequentially *(cycling)* on the Playfield and in the Backbox *(if coils or flash lamps are used).* The Dot Matrix Display indicates the same information you will find in **Single Coil Test.**

Go To Flash Lamps Menu

To initiate, from the **DIAGNOSTICS MENU**, select the "FLASH" *Icon.* The two tests allows the technician to easily spot any burned-out flash lamps and replace them. Unlike **Single Coil Test**, which tests ***all*** coil *(solenoids)*, including flash lamps, **Single** and **Cycling Flash Lamp Tests**, test only the flash lamps used in the game. Flash Lamps are typically used in positions **#25 – #32** *(although Flash Lamps may be used in any position and will be noted).*

Remember, use the **GREEN Button** to go **[BACK]**, exit *or* escape, the **RED Buttons** to [< / –] GO BACK / [+ / >] GO FORWARD, and the **BLACK Button** to **[SELECT]** ENERGIZE the flash lamp.

Single Flash Lamp Test

To initiate, from the **FLASH LAMPS MENU**, select the "TEST" *Icon.* Ensure the **Power Interlock Switch** is pulled out if testing with the Coin Door open. Upon entering **Single Flash Lamp Test**, you will notice the first Flash Lamp is shown. The Dot Matrix Display will indicate the *flash lamp name, flash lamp number* and the *Flash Lamp Power Line / Drive Transistor Control Line wire colors.* To determine the "Pin-Outs" from the I/O Power Driver Board or lamp type *(e.g. #89 or #906 Bulb),* view the Coils Detailed Chart Table at the beginning of this manual *or* for more on troubleshooting and diagnosing, see the Yellow Pages *(Schematics & Wiring).*

Bulb Types used for Flash Lamps

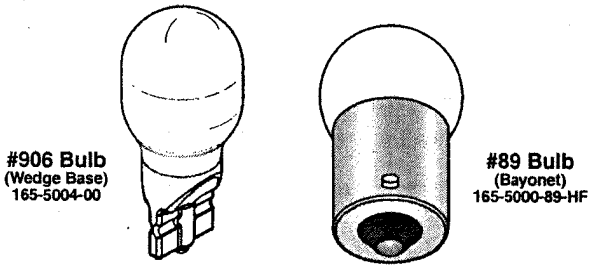

Cycling Flash Lamp Test

To initiate, from the **FLASH LAMPS MENU**, select the "CYC" *Icon* . Ensure the **Power Interlock Switch** is pulled out if testing with the Coin Door open. The test pulses each flash lamp sequentially *(cycling)* on the Playfield and in the Backbox *(if flash lamps are used).* The Dot Matrix Display indicates the same information you will find in **Single Flash Lamp Test.**

Go To Lamp Menu

To initiate, from the **DIAGNOSTICS MENU**, select the "LAMP" *Icon.* Controlled lamps are configured in and 8 X 10 Matrix of Rows [Lamp Returns / Ground] and Columns [Lamp Drives / 18VDC] with up to **80** lamps possible. The **LAMP TEST MENU** consists of five (5) parts: **Single Lamp Test, Test All Lamps, Row Lamps Test, Column Lamps Test** and **Ordered Lamps Test*** to test ***all*** lamps.

Remember, use the **GREEN Button** to go **[BACK]**, exit *or* escape, the **RED Buttons** to [< / –] GO BACK / LEFT / [+ / >] GO FORWARD / RIGHT, and the **BLACK Button** to **[SELECT]** next *or* as "OK / ENTER."

Upon entering **Single Lamp Test**, ... the #1 lamp is shown. .... Display will light up ... the *dot* ... ▶

Single Lamp Test

To initiate, from the **LAMP MENU**, select the "ONE" *Icon.* As each lamp is selected, the lamp will light at it's location on the playfield as well as the Dot Matrix Display. Upon entering **Single Lamp Test**, you will notice the #1 lamp is shown. The Dot Matrix Display will light up *(highlight)* the corresponding *dot* in the on-screen matrix, display the *lamp name, lamp number* and the *Lamp Return / Drive wire colors.* For the Lamp Matrix Grid, see the beginning section of this Service Game Manual.

Upon entering **All Lamps Test**, ... the Dot Matrix Display is flashing **"ALL LAMPS ON"** ... ▶

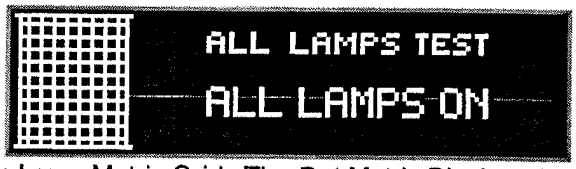

All Lamps Test

To initiate, from the **LAMP MENU**, select the "ALL" *Icon.* Upon entering **All Lamps Test**, you will notice the Dot Matrix Display is flashing **ALL LAMPS ON** and the lamps on the playfield will be lit, alternating between the rows in the Lamp Matrix Grid. The Dot Matrix Display will light up *(highlight)* all of the *dots* in the on-screen matrix.

Upon entering **Row Lamps Test**, you will notice the #1 lamp row is shown. ▶

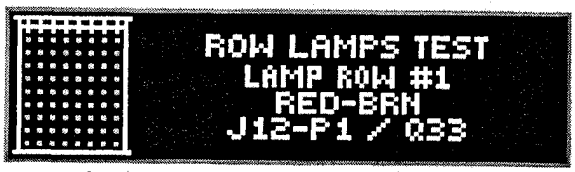

Row Lamps Test

To initiate, from the **LAMP MENU**, select the "ROW" *Icon.* As each lamp row is selected, the lamps in the row will light on the playfield as well as the Dot Matrix Display. Upon entering **Row Lamps Test**, you will notice the #1 lamp row is shown. The Dot Matrix Display will light up *(highlight)* the corresponding row of *dots* in the on-screen matrix, display the *lamp row number,* the *Lamp Return wire colors,* the *I/O PCB Connector* and *transistor number.*

Upon entering **Column Lamps Test**, you will notice the #1 lamp column is shown. ▶

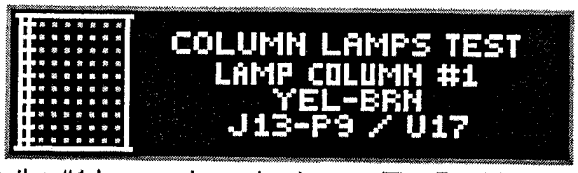

Column Lamps Test

To initiate, from the **LAMP MENU**, select the "COL" *Icon.* As each lamp column is selected, the lamps in the column will light on the playfield as well as the Dot Matrix Display. Upon entering **Column Lamps Test**, you will notice the #1 lamp column is shown. The Dot Matrix Display will light up *(highlight)* the corresponding row of *dots* in the on-screen matrix, display the *lamp column number, the Lamp Drive (18VDC) wire colors,* the *I/O PCB Connector* and *IC number.*

Bulb Types used for Control Lamps

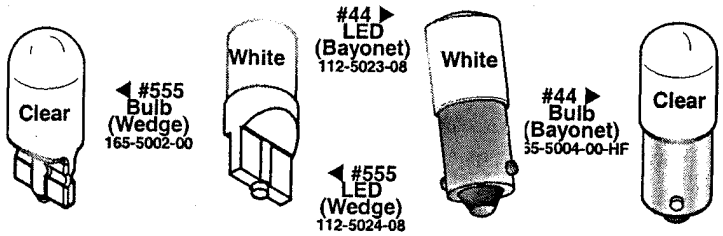

Typical Lamp Wiring & Schematic

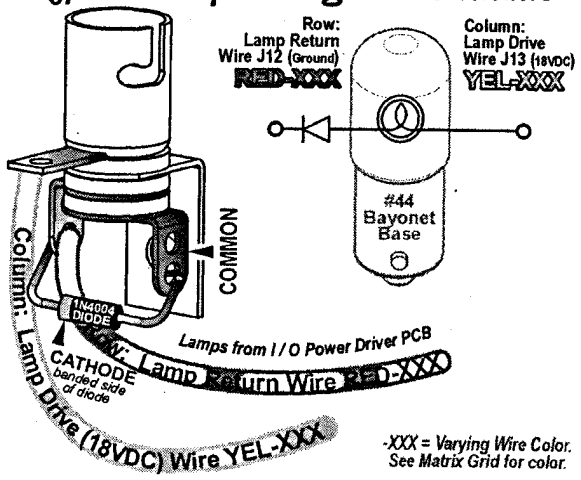

-XXX = Varying Wire Color. See Matrix Grid for color.

** If not required in this game, Icon will not be shown.*

Ordered Lamps Test

To initiate, from the **LAMP MENU**, select the "ORD" *Icon.* *If required, this Icon will appear in the **LAMP MENU.*** Identical to **Single Lamp Test**, however, the lamps lit are not in the Lamp Matrix numeric order, but ordered *or* arranged in separate localized grouping(s) for easier lamp checking.

Game-Specific Tests

To initiate, from the **DIAGNOSTICS MENU**, select the "GAME" *Icon.* Ensure the **Power Interlock Switch** is pulled out when testing with the Coin Door open. *This Menu is provided to allow the technician a simple method of testing game specific coils and/or switches, if required. If used, select the Icon (and Sub-Menu Icons, if any) and follow on-screen prompts.*

Ball Trough Test

To initiate, from the **DIAGNOSTICS MENU**, select the "CLR" *Icon.* Ensure the **Power Interlock Switch** is pulled out if testing with the Coin Door open. This Menu is provided to allow the technician a simple method of removing the balls from the trough and also, to test functionality of the trough, ensuring proper trough operation. Upon entering **Ball Trough Test**, you will notice that four switches are already indicated as closed. In the example, the 4-Ball Trough Switches **#18, #19, #20** & **#21** are shown closed *(pinballs at rest in the ball trough).* To return to the **DIAGNOSTICS MENU**, press the **Green [BACK] Button.**

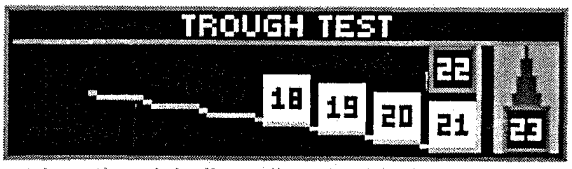

Press the **Black [SELECT] Button** to eject the ball in the first position Switch **#21** (VUK OPTO Trough #1 (R)). Simultaneously, the Dot Matrix Display and the playfield will eject the ball to the Trough Up-Kicker, eject from the Trough Up-Kicker into the Shooter Lane, momentarily closing Switch ***#23 (Shooter Lane),*** and is ejected onto the playfield where the technician can easily retrieve the pinball or allow the ball(s) to re-enter the trough to continue **Ball Trough Test.** The Dot Matrix Display indicates Switch **#18** (4-Ball Trough #4 (L)) as open as the remaining three (3) pinballs shift over one (1) position to the right. If the technician allows the ejected pinball to reenter the ball trough, the Dot Matrix Display will indicate Switch **#18** as closed. ***REMINDER:*** *Switch #22 is the stacking OPTO switch; If more than five (5) pinballs are used, the additional switches will be noted. Typically, four (4) pinballs are used and required for proper operation; if this amounts differs, it will be noted on the front page of this Service Game Manual.*

CAUTION! *Continuous use off the above test may overheat the Trough Up-Kicker Coil.*

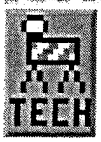

Technician Alerts

To initiate, from the **DIAGNOSTICS MENU**, select the "TECH" *Icon.* This Menu is provided to show any switch *or* solenoid problems and/or missing pinballs. If upon entering the **SERVICE MENU** the display indicated an asterisk (*) and "USE –/+ TO VIEW TECH. ALERTS", alerts are present.

After pressing either **Red [< / –] / [+ / >] Button** *or* selecting this *Icon* in the **DIAGNOSTICS MENU**, the display will indicate the alert(s). If there are 2 alerts present, the display will indicate (1/2) with the 1st alert on the display. Press the **Red [+ / >] Button** to view the second alert (2/2). The second number in the parenthesis ( ) after the slash (/) indicates how many alerts are present. Refer to the start of this chapter *regarding "Upon entering the* **SERVICE MENU** **"* indication and to **SWITCH ALERTS.** To return to the **DIAGNOSTICS MENU**, press the **Green [BACK] Button.** ***Note:*** *While in this menu, an option may be present to jump (short-cut) to the appropriate Testing Menu (e.g. Coil Test, Switch Test, Game Specific Test or Ticket Dispenser Test, if installed).*

NOTE ON SWITCH DETECTION : During game play, activation of switches are continuously monitored. For a switch to be determined as inoperable *or* **OUT OF SERVICE**, up to twenty games *or* so must be played for a switch to be automatically marked as **OUT OF SERVICE.** In programming, if a switch is determined to be faulty, game play is compensated. Switches noted as **OUT OF SERVICE** are determined to be stuck closed *or* open depending on switch usage. Free up the switch actuator, adjust *or* replace, if necessary. Performing a valid switch closure will put the switch back "IN SERVICE."

Determination of switch usage can be checked in **Audits** *(review the Audits Section).* Find the associated Audit with the switch in question and check usage; compare the numbers to commonly used switches. After any switch is checked and repaired *or* replaced, it's suggested to test the switch in the **Switch Test** *or* **Single Coil Test** *(reviewed earlier in this section)* where the associated coil to the switch can be tested as well. After correcting the problem, the switch will marked "IN SERVICE" and the switch is again monitored as specified above. *Only you can determine if a switch marked OUT OF SERVICE is actually inoperable, or if it is just not getting actuated during game play.*

NOTE ON PINBALL DETECTION : While in **TECHNICIAN ALERTS MENU**, if the following is displayed, the game has detected one (1) *or* more pinball(s) missing and has compensated for the lost pinball(s) to provide normal game play.

Technician Alerts continued on the next page.

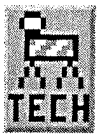

Technician Alerts continued from previous page.

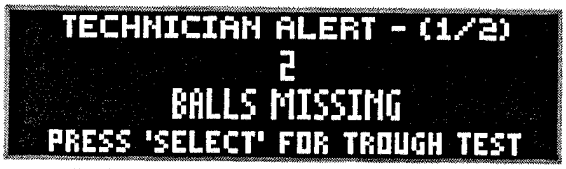

During game play, a pinball can get trapped *or* stuck. If after approximately 15 seconds of inactivity or "no scoring," **Ball Search** is started. ***Note:*** *If the pinball is in the Plunger Lane or "held" on the flipper, no* ***Ball Search*** *will be performed.* The game will perform one **Ball Search** in an attempt to "find" or free-up the pinball.

If the game does not see a switch closure *(indicating the pinball has not been found),* the Dot Matrix Display may indicate **[LOCATING PINBALLS PLEASE WAIT ...]**, during which **Ball Search** will continue until the timer runs out *(this feature will not happen if the game is in Competition Mode; Ball Search will continue until the pinball is found, unstuck and/or replaced manually).* The display will momentarily acknowledge the missing pinball(s). The game will provide another pinball into play and will compensate for the lost pinball. Game play will appear normal.

Note: *This detection and compensation will happen with every pinball, if each suffers the same fate of a ball trap. If* ***all*** *balls get trapped, the game cannot be played or started until the situation is rectified.*

Important: *Determine where the pinball is!* ***Do not add pinball(s)*** *until it is determined the pinball(s) are indeed missing and not just stuck. The most common places for a pinball to be stuck is in device holes (ejects and VUKs) or* ball troughs. Determine that all devices are functionally properly. Check around plastic pieces and ramps to see if the pinball got jammed *or* stuck.

When the found pinball *or* a replacement pinball is added to the Ball Trough, the **Technican Alert** will immediately clear and will then indicate any remaining alerts *(if present) or* **NO TECHNICIAN ALERTS.**

Enter the **BALL TROUGH TEST** *(review the previous page)* to cycle the pinballs and to check proper switch and coil operation. *If a pinball was added, and the originally stuck pinball has freed itself at a later time, the game will not operate correctly.*

NOTE ON DEVICE MALFUNCTION : While in **TECHNICIAN ALERTS MENU**, if the following is displayed, the game has detected a "device malfunction." Check the device indicated *(coil and/or switch).*

Knocker Test

To initiate, from the **DIAGNOSTICS MENU**, select the "KNO- CKER" *Icon.* The digitally mastered "Knocker" is sounded. The *knocker sound* is used to alert the player if he/she has received a special, replay or a credit from the Match Award feature. Press the **Black [SELECT] Button** to activate the knocker. To return to the **DIAGNOSTICS MENU**, press the **Green [BACK] Button.**

FACTOID: *The knocker got it's name from the 'original knocker' (20th century pinball games), which used a coil and when energized (fired), the plunger would strike a wood panel inside the cabinet.*

Sound / Speaker Test

To initiate, from the **DIAGNOSTICS MENU**, select the "SPKR" *Icon.* This system produces true digital stereo sound from Backbox & Cabinet Speakers or *"Mono"* on the Cabinet Speaker *(when used by itself).* This Menu is provided to allow the technician a simple method of testing the speakers if rewired or replaced.

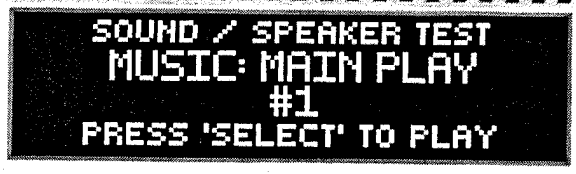

Upon entering **Sound / Speaker Test**, you will notice the Dot Matrix Display indicating the first option of *available* music *and/or* sound(s) in this test. Press the **Red [+ / >] Button** to cycle through the *available* music *and/or* sounds, and press the **Black [SELECT] Button** to play the option shown in the Dot Matrix Display. Press the **Green [BACK] Button** to exit.

Speaker Phase Testing

Connections to each of speakers are polarized and each must be connected appropriately for the best quality sound. If one speaker has the positive and negative connections reversed with respect to the other one, bass frequencies will not be produced properly and the overall sound quality will be poor. To test for proper speaker phasing, use the **Sound / Speaker Test** to cycle through the available music and sound.

Speaker Phase Testing cont. next page.

Speaker Phase Testing continued from previous page.

If the sound is not balanced or doesn't sound correct, check the speaker wiring.

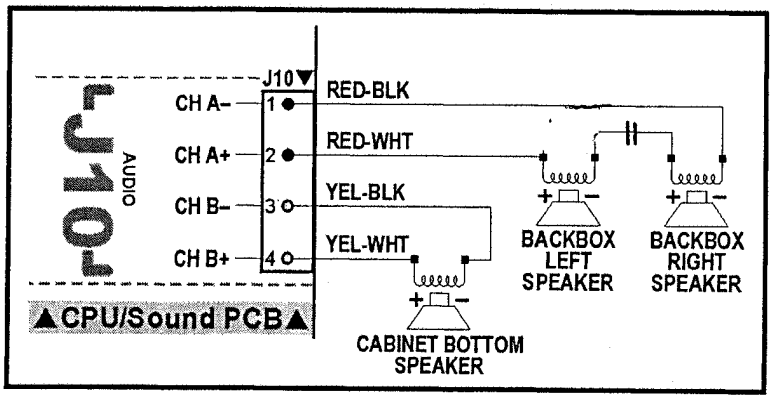

1. Check each speaker for polarity markings. If the speakers have polarity markings, verify that the Backbox Speaker's **RED-BLK** Wires and the Cabinet Speaker **YEL-BLK** Wire(s) are connected to the negative (–) terminal.

2. Disconnect the speaker output **Connector J10 (AUDIO)** from the CPU / Sound PCB *(in the Backbox)* and connect a 1.5-volt battery across each speaker pair one at a time while observing the speakers.

3. Make sure the positive (+) battery terminal is connected to the positive lead [J10, Pin-2, **CH A+**] **(RED-WHT)** *or* [J10, Pin-4, **CH B+**] **(YEL-WHT)** each time. As the connection is made, check speaker cone movement; proper connections are indicated by outward movement.

Begin Burn-In

To initiate, from the **DIAGNOSTICS MENU**, select the "BURN" *Icon*. After selecting this *Icon*, press the **Black [SELECT] Button** to begin (initiate) the ***Burn-In Test***. Ensure the **Power Interlock Switch** is pulled out if testing with the Coin Door open *(required for coil function)*. Upon entering **Burn-In Test**, the game will exercise all CPU I/O Functions: **Dot Matrix Display Test, Coil Cycling Testing, All Lamps Test** and **Sound / Speaker Test.** Press the **Green [BACK] Button,** to pause and to view the cumulative Burn-In minutes. Press the **Green [BACK] Button** again to return to the **DIAGNOSTICS MENU.**

Note: *To reset Burn-In minutes back to **0:00**, see Section **3**, Chapter **5**, **GO TO RESET MENU** (via the UTILITIES MENU), **Reset Factory Settings.** ⚠ **CAUTION:** Performing a **FACTORY RESET** will reset all other information as well (read the Utilities Section (**GO TO RESET MENU**), for more information).*

Dot Matrix Test

To initiate, from the **DIAGNOSTICS MENU**, select the "DOT TEST" *Icon*. After selecting this *Icon* the **Dot Matrix Test** immediately begins. The Dot Matrix Display will immediately and continuously illuminate and cycle each of the ***5 Tests for 1 pass each***. To return to the **DIAGNOSTICS MENU**, press the **Green [BACK] Button.**

Test 1

Illuminates **1 vertical column of dots,** turning it off & illuminating the next column, until each column has been individually lit, while the other columns are off.

Test 2

Illuminates **1 horizontal row of dots,** turning it off & illuminating the next row, until each row has been individually lit, while the other rows are off.

Test 3

Illuminates **all the dots, except for one column** from left to right.

Test 4

Illuminates **all the dots, except for one row** from top to bottom.

Test 5

Illuminates **all the dots alternating even & odd,** in both the *rows and columns.*

Test 1

Illuminates **1 vertical column of dots,** turning it off & illuminating the next column, until each column has been individually lit, while the other columns are off.

Ticket Dispenser Test

To initiate, from the **DIAGNOSTICS MENU**, select the "TIX" *Icon.* This Menu *(Icon) will only appear* if **Standard Adjustment 56, Ticket Dispenser**, is set to **YES** (Default = **NO***). ***Note:** *Some games shipped from the factory with a unique Dip Switch Setting will default to **YES**). To view and/or change your setting, see Adjustments Section (**GO TO ADJUSTMENTS MENU**). Please remember, if you install an optional Ticket Dispenser, and your default setting is "NO," you will have to reset it back to "YES" if a **Factory Reset** is performed.*

After selecting this *Icon*, the ***Ticket Dispenser Test*** will start. With the Ticket Dispenser properly installed, manually feed your tickets into the dispenser. The dispenser will activate and pull in the first ticket. Press the **Black [SELECT] Button** (which energizes Coil #35, Aux 3: Switched Ground) to advance a ticket. Feeding your Tickets into the dispenser works because Coil #33, Aux 1: Ticket Advance (Enable) is always 'energized'. With a Ticket Meter installed, as one Ticket Passes through the Ticket Dispenser, one 'click' is fired to the Meter (Coil #34, Aux 2: Ticket Meter) for each ticket passing through. Dedicated Switch **D-19, Ticket Notch**, will also be indicated on-screen *(in combination with a audible sound)* as "closing" as the notch between the tickets passes through. In this test you can clear ticket jams and check and/or clear tickets in Escrow, if necessary. To return to the **DIAGNOSTICS MENU**, press the **Green [BACK] Button**.

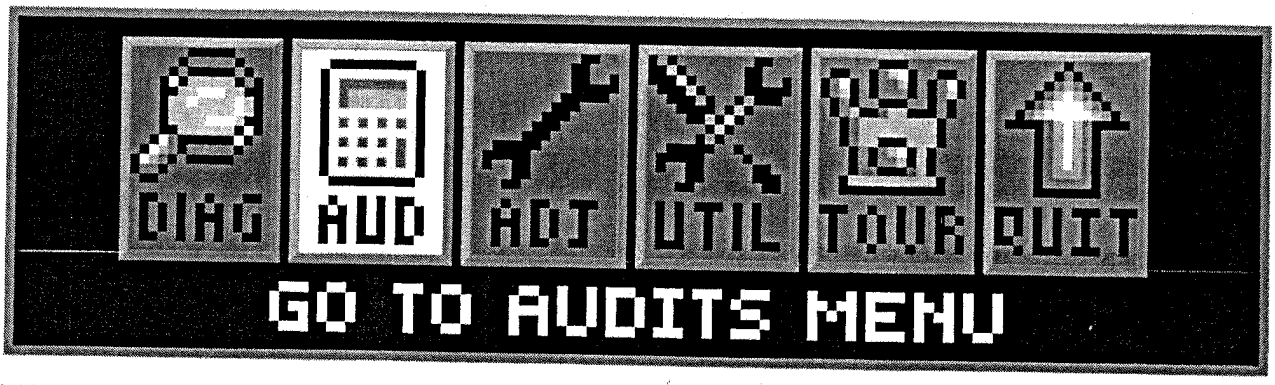

To initiate, from the **MAIN MENU**, select the "AUD" *Icon*. The **AUDITS MENU** provides 99* Audits for accounting purposes and for evaluation of *Game Programming*. The Audits are divided into 4 groups: • **Earnings Audits [#1 – #13]**, • **Standard Audits [#1 – #59]**, • **Feature Audits (Programming Use Only)** [#1 – #+] and • Tournament Audits [#1 – #14], "T AUD" *Icon* provided as an alternate access to Tournament Audits *(*if data is available)*. For more information on the **TOURNAMENT MENU**, *review the Tournament Section (**GO TO TOURNAMENT MENU**). Try the **"DUMP AUDITS TO USB"** feature to create a text file of your audits. Don't forget to set the DATE & TIME in the **UTILITIES MENU**. See the Utilities Section (**GO TO UTILITIES MENU**), for more information.*

Audits which are named **Proprietary** are also for ***Future Expansion*** or ***Programming***. Game code may get upgraded during production; compare all Audits in the Dot Matrix Display with the manual and make any corrections, as necessary. Audits are subject to change *(with or without notice)*.

All **AUDITS MENU** *Icons* and there usages are explained throughout this chapter in the same order as seen in the Dot Matrix Display. ***NOTE:*** Depending on Game Type, Version, selections made, Dip Switch settings, location and/or areas, some *Icons* may appear non-functional *or* may not appear at all. ***Icons** and/or **functions, order** and **operation are subject to change**.*

In displays where changes can be made *or* to perform a function, use the **GREEN Button** to go **[BACK]**, exit *or* escape, the **RED Buttons** to [< / –] MOVE BACK / LEFT / [+ / >] MOVE FORWARD / RIGHT to view the next audit in the group, and the **BLACK Button** to **[SELECT]** the sub-menus.

Earnings Audits [#1 – #13]

To initiate, from the **AUDITS MENU**, select the "EARN" *Icon*. The Dot Matrix Display will indicate the *audit number (in this group)*, *audit name* and the *audit total or value*. The current audit will remain on the display until the next audit is viewed or when this sub-menu is exited.

#1 **TOTAL PAID CREDITS [0] :** Total number of *Paid Credits*.

#2 **FREE GAME PERCENTAGE [0%] :** Percentage value is 'Total Free Plays' (Standard Audit **15**) divided by 'Total Plays' (Standard Audit **16**).

#3 **AVERAGE BALL TIME [0:00] :** In seconds, the average ball time is derived from the total play time divided by Standard Audit **1**, Total Balls Played.

#4 **AVERAGE GAME TIME [0:00] :** The average game time is expressed in minutes and seconds.

#5 **COINS THROUGH LEFT SLOT [0] :** Total 'Left Coin Slot' Dedicated Switch (**D-1**) closures.

#6 **COINS THROUGH RIGHT SLOT [0] :** Total 'Right Coin Slot' Dedicated Switch (**D-3**) closures.

#7 **COINS THROUGH CENTER SLOT [0] :** Total 'Center Coin Slot' Dedicated Switch (**D-2**) closures.

#8 **COINS THROUGH FOURTH SLOT [0] :** Total '4th Coin Slot' Dedicated Switch (**D-4**) closures.

#9 **COINS THROUGH FIFTH SLOT [0] :** Total '5th Coin Slot' Dedicated Switch (**D-5**) closures.

#10 **TOTAL COINS [0] :** Total amount of coins registered through all the *Coin Slots*.

#11 **TOTAL EARNINGS [USD 0.00] :** Total cash value accumulated since the last Factory Reset occurred *(reveiw the Utilities Section (**GO TO RESET MENU**), **Reset Coin Audits**)*.

#12 **METER CLICKS [0] :** Total number of money clicks accumulated.
Based on the country's lowest coin denomination used for the game credit.

#13 **SOFTWARE METER [0] :** Continuing total of Meter Clicks.
This audit cannot be reset; the display shows the constant addition of Meter Clicks.

Standard Audits [#1 – #59]

To initiate, from the **AUDITS MENU**, select the "S.P.I." *Icon*. The Dot Matrix Display will indicate the *audit number (in this group), audit name* and the *audit total or value*. The current audit will remain on the display until the next audit is viewed or when this sub-menu is exited.

#1 **TOTAL BALLS PLAYED [0] :** Total number of *Regular* and *Extra Balls.*

#2 **TOTAL EXTRA BALLS [0] :** Total number of *Extra Balls* awarded.

#3 **EXTRA BALLS PERCENTAGE [0%] :** Percentage value is 'Total Extra Balls' (Standard Audit **2**) divided by 'Total Plays' (Standard Audit **16**).

#4 **REPLAY 1 AWARDS [0] :** Total *Awards (Credits, Extra Balls or Scores)* for Level 1.

#5 **REPLAY 2 AWARDS [0] :** Total *Awards (Credits, Extra Balls or Scores)* for Level 2.

#6 **REPLAY 3 AWARDS [0] :** Total *Awards (Credits, Extra Balls or Scores)* for Level 3.

#7 **REPLAY 4 AWARDS [0] :** Total *Awards (Credits, Extra Balls or Scores)* for Level 4.

#8 **TOTAL REPLAYS [0] :** Total *Awards (Credits, Extra Balls or Scores)* for exceeding *Replay Score Levels.*

#9 **REPLAY PERCENTAGE [0%] :** Percentage value is 'Total Replays' (Standard Audit **8**) divided by 'Total Plays' (Standard Audit **16**). *The percentage reflects replay total awards for exceeding replay score levels.*

#10 **TOTAL SPECIALS [0] :** Total *Awards (Credits, Extra Balls, or Scores)* for making *Specials.*

#11 **SPECIAL PERCENTAGE [0%] :** Percentage value is 'Total Specials' (Standard Audit **10**) divided by 'Total Plays' (Standard Audit **16**).

#12 **TOTAL MATCHES [0] :** Total *Credits* awarded for matching the last two digits of the score with the *System-Generated Match Number* at the end of the game. Percentage of *Match Credits* is adjustable from **0%** to **10%** or **OFF** by Standard Adjustment **19,** Match Percentage, *if enabled (review the Adjustments Section (**GO TO ADJUSTMENTS MENU**), **Standard Adjustments**).*

#13 **HIGH SCORE AWARDS [0] :** Total *Awards (Credits, Extra Balls, or Scores)* for exceeding the High-Score-To-Date scores.

#14 **HIGH SCORE PERCENT [0%] :** Percentage value is 'High Score Awards' (Standard Audit **13**) divided by 'Total Plays' (Standard Audit **16**).

#15 **TOTAL FREE PLAYS [0] :** Total *Free Credits* for *Replays, High-Score-To-Date, Specials and Match.*

#16 **TOTAL PLAYS [0] :** This total is derived by adding the sum of 'Total Paid Credits' (Earnings Audit **1**) and 'Total Free Plays' (Standard Audit **15**). *Note: Free credits are not recorded in the Audit until actually used.*

#17 **0.0M–1.99M SCORES [00] :** Total number of games the Player's final score was between **0** and **1,999,990** points.

#18 **2.0M–3.99M SCORES [00] :** Total number of games the Player's final score was between **2,000,000** and **3,999,990** points.

#19 **4.0M–5.99M SCORES [00] :** Total number of games the Player's final score was between **4,000,000** and **5,999,990** points.

#20 **6.0M–7.99M SCORES [00] :** Total number of games the Player's final score was between **6,000,000** and **7,999,990** points.

#21 **8.0M–9.99M SCORES [00] :** Total number of games the Player's final score was between **8,000,000** and **9,999,990** points.

#22 **10.0M–12.49M SCORES [00] :** Total number of games the Player's final score was between **10,000,000** and **12,499,990** points.

#23 **12.5M–14.99M SCORES [00] :** Total number of games the Player's final score was between **12,500,000** and **14,499,990** points.

#24 **15.0M–17.49M SCORES [00] :** Total number of games the Player's final score was between **15,000,000** and **17,499,990** points.

#25 **17.50M–19.99M SCORES [00] :** Total number of games the Player's final score was between **17,500,000** and **19,999,990** points.

#26 **20.0M–24.99M SCORES [00] :** Total number of games the Player's final score was between **20,000,000** and **24,999,990** points.

#27 **25.0M–29.99M SCORES [00] :** Total number of games the Player's final score was between **25,000,000** and **29,999,990** points.

Standard Audits 28-59 continued on the next page.

Standard Audits Continued

#28 **30.0M–39.99M SCORES [00]:** Total number of games the Player's final score was between **30,000,000** and **39,999,990** points.

#29 **40.0M–49.99M SCORES [00]:** Total number of games the Player's final score was between **40,000,000** and **49,999,990** points.

#30 **50.0M–74.99M SCORES [00]:** Total number of games the Player's final score was between **50,000,000** and **74,999,990** points.

#31 **75.0M–99.99M SCORES [00]:** Total number of games the Player's final score was between **75,000,000** and **99,999,990** points.

#32 **100.0M–149.99M SCORES [00]:** Total number of games the Player's final score was between **100,000,000** and **149,999,990** points.

#33 **150.0+M SCORES:** Total number of games the Player's final score was **150,000,000** points and over.

#34 **AVERAGE SCORES [00]:** This total is derived by adding the Final Score of each game to a table and dividing this sum by 'Total Plays' (Standard Audit **16**).

#35 **SERVICE CREDITS [0]:** Total 'Green [SERVICE CREDIT] Button' Dedicated Switch (**D-21**) closures in **Attract Mode** *(not while in the **SERVICE MENU**). See the Service Menu Section, **Service Switch X4 Set Access & Use**, for how to receive Service Credits. See the Utilities Section (**GO TO RESET MENU**), **Reset Credits**, for how to delete credits.*

#36 **BALL SEARCH STARTED [0]:** Total number of times the game performed a *Ball Search.*

#37 **LOST BALL FEEDS [0]:** Total number of times the game added a pinball to play when it could not find a pinball after *Ball Search (review the Diagnostics Section (**GO TO DIAGNOSTICS MENU**), **Technicians Alert** [Pinball Detection]).*

#38 **LOST BALL GAME STARTS [0]:** Total number of times the game started with a pinball missing from the ball trough at the start of a game *(review the Diagnostics Section (**GO TO DIAGNOSTICS MENU**), **Technicians Alert** [Pinball Detection]).*

#39 **LEFT DRAINS [0]:** Total 'Left Outlane' Switch (**24**) closures.

#40 **CENTER DRAINS [0]:** Total number of times the pinball had drained when the last switch closed was not the 'Left Outlane' (**24**) *or* the 'Right Outlane' Switch (**29**).

#41 **RIGHT DRAINS [0]:** Total 'RIght Outlane' Switch (**29**) closures.

#42 **TILTS [0]:** Total 'Tilt Pendulum' Dedicated Switch (**D-17**) closures.

#43 **TOTAL BALLS SAVED [0]:** Total number of times this feature was used. This feature is adjustable from **0:01–0:15, AUTO** or **NO BALL SAVES** *(review the Adjustments Section (**GO TO ADJUSTMENTS MENU**), Standard Adj. **48**, Ball Save Time). This feature is enabled at the start of each pinball and is disabled as soon as a predetermined number of switches are "closed" **or** the allocated time has expired.*

#44 **LEFT FLIPPER USED [0]:** Total 'Left Flipper Button' Dedicated Switch (**D-9**) closures in **Game Mode.**

#45 **RIGHT FLIPPER USED [0]:** Total 'Right Flipper Button' Dedicated Switch (**D-11**) closures in **Game Mode.**

#46 **0 - 1 MINUTE GAMES [0]:** Total games in which the total game time was between **0:00** and **1:00** minute.

#47 **1 – 1.5 MINUTE GAMES [0]:** Total games where play time was between **1:00** and **1:30** minutes.

#48 **1.5 – 2 MINUTE GAMES [0]:** Total games where play time was between **1:30** and **2:00** minutes.

#49 **2 – 2.5 MINUTE GAMES [0]:** Total games where play time was between **2:00** and **2:30** minutes.

#50 **2.5 – 3 MINUTE GAMES [0]:** Total games where play time was between **2:30** and **3:00** minutes.

#51 **3 – 3.5 MINUTE GAMES [0]:** Total games where play time was between **3:00** and **3:30** minutes.

#52 **3.5 – 4 MINUTE GAMES [0]:** Total games where play time was between **3:30** and **4:00** minutes.

#53 **4 – 5 MINUTE GAMES [0]:** Total games where play time was between **4:00** and **5:00** minutes.

#54 **5 – 6 MINUTE GAMES [0]:** Total games where play time was between **5:00** and **6:00** minutes.

#55 **6 – 8 MINUTE GAMES [0]:** Total games where play time was between **6:00** and **8:00** minutes.

#56 **8 – 10 MINUTE GAMES [0]:** Total games where play time was between **8:00** and **10:00** minutes.

#57 **10 – 15 MINUTE GAMES [0]:** Total games where play time was between **10:00** and **15:00** minutes.

#58 **15+ MINUTE GAMES [0]:** Total games in which the total game time was **15:00** minutes and over.

#59 **RECENT REPLAY PERCENT [0%]:** *Percent figured with programming thresholds for a determined number of games. The % reflects replay total awards for exceeding replay score levels.*

Standard Adjustments continued.

#3 **REPLAY AWARD:** Set to **CREDIT**, **TICKET***, **TOKEN*** *or* **EXTRA BALL**. Factory Default = **CREDIT**. Set the type of award to be given to the player when the appropriate Replay Score threshold or level is acheived. If awarding a ***CREDIT***, ***TICKET*** *or* ***TOKEN*** is prohibited in your area, select **EXTRA BALL**. *This adjustment is not shown if* ***NONE*** *is installed in* ***Replay Type*** *(Standard Adjustment* ***1****).*

**Note: If TICKET or TOKEN is selected, the game will require an optional Ticket or Token Dispenser and then Q24 Option (Standard Adj. 55) must be changed accordingly.*

#4 **REPLAY LEVELS:** Set between **1 – 4** for the number of Replay Levels to be active. Factory Default = **1**. *This adjustment is not shown if* ***NONE*** *is installed in* ***Replay Type*** *(Standard Adjustment* ***1****).*

#5 **AUTO REPLAY START:** Set between **5,000,000 – 150,000,000** *(increments of 1,000,000)* for the Auto Replay Start threshold. Factory Default = **__,000,000**. *This adjustment is shown only if* ***AUTO*** *is installed in* ***Replay Type*** *(Standard Adjustment* ***1****).*

#6 **DYNAMIC REPLAY START:** Set between **5,000,000 – 150,000,000** *(increments of 1,000,000)* for the Dynamic Replay Start threshold. Factory Default = **__,000,000**. *This adjustment is shown only if* ***DYNAMIC*** *is installed in* ***Replay Type*** *(Standard Adjustment* ***1****).*

#7 **REPLAY LEVEL #1:** Set between **5,000,000 – 150,000,000** *(increments of 1,000,000)*. Factory Default = **__,000,000**. Set the first *or* only Replay Level. *This adjustment is shown only if* ***FIXED*** *is installed in* ***Replay Type*** *(Standard Adjustment* ***1****).*

#8 **REPLAY LEVEL #2:** Set between **5,000,000 – 150,000,000** *(increments of 1,000,000)*. Factory Default = **__,000,000**. Set the second Replay Level. *This adjustment is shown only if* ***FIXED*** *is installed in* ***Replay Type*** *(Standard Adjustment* ***1****) and* ***2*** *is intalled in* ***Replay Levels*** *(Standard Adjustment* ***4****).*

#9 **REPLAY LEVEL #3:** Set between **5,000,000 – 150,000,000** *(increments of 1,000,000)*. Factory Default = **__,000,000**. Set the third Replay Level. *This adjustment is shown only if* ***FIXED*** *is installed in* ***Replay Type*** *(Standard Adjustment* ***1****) and* ***3*** *is intalled in* ***Replay Levels*** *(Standard Adjustment* ***4****).*

#10 **REPLAY LEVEL #4:** Set between **5,000,000 – 150,000,000** *(increments of 1,000,000)*. Factory Default = **__,000,000**. Set the fourth Replay Level. *This adjustment is shown only if* ***FIXED*** *is installed in* ***Replay Type*** *(Standard Adjustment* ***1****) and* ***4*** *is intalled in* ***Replay Levels*** *(Standard Adjustment* ***4****).*

#11 **REPLAY BOOST:** Set to **YES** *or* **NO**. Factory Default = **YES**. When set to **YES**, while **FIXED** or **AUTO** maintains the Replay Levels, Replay Boost works as follows: If the Replay Level is 7,000,000 *(regardless of the Replay Percentage)*, and the Player scores 20M, and receives the Replay Award, the next game the Current Replay Level is added to this base. Thus the next game, the Replay Level is 14,000,000. The Player agains scores 20M. The next game the Player will need to achieve 21,000,000 to earn the Replay Award. If the Player does not achieve 21,000,000, the next game reverts back to the original 7,000,000 or the new adjusted level maintained by the Fixed or Autopercentaging Feature. *This adjustment is shown only if* ***AUTO*** *or* ***FIXED*** *is installed in* ***Replay Type*** *(Standard Adjustment* ***1****).*

#12 **SPECIAL LIMIT:** Set between **1 – 5**, **UNLIMITED** *or* **NO SPECIALS**. Factory Default = **1**. Set the maximum number of *Specials* that may be accumulated per game.

#13 **SPECIAL PERCENTAGE:** Set between **1% – 50%**. Factory Default = **10%**. This adjustment allows the operator to adjust how frequently the ***Special Feature*** is made available to the player. *This adjustment is not shown if* ***NO SPECIALS*** *is installed in* ***Special Limit*** *(Standard Adjustment* ***12****).*

#14 **SPECIAL AWARD:** Set to **CREDIT**, **TICKET***, **TOKEN***, **POINTS** *or* **EXTRA BALL**. Factory Default = **CREDIT**. Select **EX. BALL** or **POINTS** if awarding a ***CREDIT*** or ***TICKET / TOKEN*** is prohibited in your area. *This adjustment is not shown if* ***NO SPECIALS*** *is installed in* ***Special Limit*** *(Standard Adjustment* ***12****).*

**Note: If TICKET or TOKEN is selected, the game will require an optional Ticket or Token Dispenser and then Q24 Option (Standard Adj. 55) must be changed accordingly.*

#15 **FREE GAME LIMIT:** Set between **1 – 9**, **UNLIMITED** *or* **NO FREE GAMES**. Factory Default = **5**. Set the maximum number of *Free Games* that may be accumulated per game.

#16 **EXTRA BALL LIMIT:** Set between **1 – 9**, **UNLIMITED** *or* **NO EXTRA BALLS**. Factory Default = **5**. Set the number of *Extra Balls* that may be accumulated per game.

#17 **EXTRA BALL PERCENTAGE:** Set between **1% – 50%**. Factory Default = **25%**. This adjustment allows the operator to adjust how frequently the ***Extra Ball Feature*** is made available to the player. *This adjustment is not shown if* ***NO EXTRA BALLS*** *is installed in* ***Extra Ball Limit*** *(Standard Adjustment* ***16****).*

#18 **GAME PRICING:** There are two (2) methods available for *Coin Switch Programming*: **Standard** & **Custom**. Set between **AUSTRALIA 1 – UK 6** *or* **CUSTOM**. Factory Default = **USA 10**. *Shortcut:* ***Set Custom Pricing*** *and instructions, review the Utilities Section,* ***Set Custom Pricing***. The appropriate Dip Switch Setting (Dip Sw. 1-8 location CPU/Sound PCB SW1) in relationship to the Pricing Scheme selected is important *(view the tables on the following pages for more information).*

Standard Adjustment 18, Game Pricing, continued on the next page.

Standard Adjustment 18, Game Pricing, continued.

USA & International (non-Euro) Standard Pricing Select Table

S.P.I.

CPU/SOUND PCB DIP SWITCH SW1 SETTING	COUNTRY SETTING OPTION(S)	COIN MECHANISMS (SWITCHES) COINS THRU ... SLOT: LEFT	CENTER	RIGHT	4TH	PRICING SCHEME — Number of Plays (Credits) for Price Amount Shown — See "Appendix J" for Coin Cards Examples & Info!	Requires SPI Coin Card(s) Part Number
Pos. 1 2 3 4 5 6 7 8 — ON: ▼▼▼▼▼▼▼▼ — OFF: ▼▼▼▼▼▼▼▼	USA 1	0.25	1.00	0.25		USD // UNITED STATES DOLLAR // [$]	
	USA 2					1/0.25	755-5400-01-Y
HIGHLIGHTED = Factory Default	USA 3					1/0.50 — 2/0.75 — 3/1.00	755-5400-09-Y
HIGHLIGHTED = Not Shown on Coin Card	USA 4					1/0.50 — For USA 6 and USA 7 use: 755-5400-02-Y. USA 8 Note: If player uses X4 25¢ quarters = 2 plays. However, $1 bill = 3 plays!	755-5400-02-Y
	USA 5					1/0.50 — 2/1.00 — 3/1.50 — 5/2.00	755-5400-08-Y
	USA 6					1/0.50 — 2 / 25¢ X 4 — 3 / $ 1.00 Bill	Used to promote the Bill Validator.
	USA 7					1/0.50 — 2/1.00 — 4/1.50 — 6/2.00	
	USA 8					1/0.50 — 3/1.00	755-5400-00-Y
	USA 9					1/1.00	755-5400-07-Y
	USA 10					1/0.75 — 2/1.50 — 3/2.00	755-5400-11-Y
Pos. 1 2 3 4 5 6 7 8 — ON: ▲ ▲▲ — OFF: ▼▼▼▼▼▼	AUSTRALIA 1	0.20	1.00	2.00		AUD // AUSTRALIAN DOLLARS // [$AUS]	
	AUSTRALIA 2					1/1.00 — 3/2.00	755-5406-00-Y (1 Side)
						1/1.00	
Pos. 1 2 3 4 5 6 7 8 — ON: ▲▲ ▲▲ — OFF: ▼▼▼▼▼▼	CANADA 1 [25¢ door]	0.25	0.25	1.00	2.00	CAD // CANADIAN DOLLARS // [$CAN]	
	CANADA 2 [dollar door]	1.00		2.00		1/0.50 — 2/0.75 — 3/1.00	755-5400-00-Y -01-Y or -02-Y
						1/1.00 — 3/2.00	755-5400-10-Y
Pos. 1 2 3 4 5 6 7 8 — ON: ▲▲ ▲ — OFF: ▼ ▼▼▼▼▼	CROATIA	1	2	5		HRK // CROATIAN KUNA // [kuna]	
						1/3 — 2/5	755-5410-00-Y (2-Sided)
Pos. 1 2 3 4 5 6 7 8 — ON: ▲ ▲ — OFF: ▼▼ ▼▼▼▼▼	DENMARK 1	1	5	10	20	DKK // DANISH KRONER // [Kr]	
	DENMARK 2					1/3 — 2/5	755-5402-00-Y (2-Sided)
						1/2 — 2/4 — 3/5 — 4/7 — 5/9 — 7/10	
Pos. 1 2 3 4 5 6 7 8 — ON: ▲ ▲ ▲ — OFF: ▼ ▼ ▼▼▼▼▼	JAPAN 1	100		100		JPY // JAPANESE YEN // [¥]	
	JAPAN 2					1/100	
						1/100 — 3/200	755-5408-01-Y (2-Sided)
Pos. 1 2 3 4 5 6 7 8 — ON: ▲▲ ▲▲ — OFF: ▼▼▼▼▼	LITHUANIA	1	2	5		LTL // LITHUANIA LITAI // [Lt]	
						1/2	755-5416-00-Y (1 Side)
Pos. 1 2 3 4 5 6 7 8 — ON: ▲▲▲ ▲ — OFF: ▼▼▼▼▼	MIDDLE EAST	token		token		TOKEN // Middle East currency used to buy token // [TOKEN]	
						1/1	755-5416-00-Y (use Side 1)
Pos. 1 2 3 4 5 6 7 8 — ON: ▲ ▲ — OFF: ▼▼▼▼ ▼▼▼▼	NEW ZEALAND 1	1		2		NZD // NEW ZEALAND DOLLAR // [$NZD]	
	NEW ZEALAND 2					1/1	
						1/1 — 3/2	755-5406-00-Y (Side 2)
Pos. 1 2 3 4 5 6 7 8 — ON: ▲ ▲ — OFF: ▼ ▼ ▼▼▼▼▼	NORWAY 1	10	5	20		NOK // NORWEGIAN KRONE // [Kr]	
	NORWAY 2					1/10	
	NORWAY 3					1/10 — 3/20	755-5403-01-Y or -02-Y / (2-Sided)
	NORWAY 4					1/20	755-5403-03-Y (2-Sided)
						1/20 — 3/40	
Pos. 1 2 3 4 5 6 7 8 — ON: ▲ ▲▲ — OFF: ▼▼ ▼▼▼▼▼	RUSSIA	▼ LEFT SWITCH CAN BE WIRED TO BILL ACCEPTOR ▼ 10	5	1		RUB // RUSSIAN RUBLE // [Ruble]	
						1/5	755-5411-00-Y (2-Sided)
Pos. 1 2 3 4 5 6 7 8 — ON: ▲ ▲ ▲ — OFF: ▼▼ ▼ ▼▼▼▼▼	SO. AFRICA 1	0.50	1.00	2.00	5.00	ZAR // SOUTH AFRICAN RAND // [R]	
	SO. AFRICA 2					1/2.00	
						1/3.00 — 2/5.00	755-5409-01-Y (2-Sided)
Pos. 1 2 3 4 5 6 7 8 — ON: ▲▲ ▲ — OFF: ▼ ▼▼▼▼▼	SWEDEN 1	1	5	10		SEK // SWEDISH KRONOR // [kr]	
	SWEDEN 2					1/10 — 2/15 — 3/20	755-5404-00-Y (2-Sided)
						1/5	
Pos. 1 2 3 4 5 6 7 8 — ON: ▲ ▲ — OFF: ▼▼ ▼▼▼▼▼	SWITZERLAND 1	1	2	5		CHF // SWISS FRANCS // [Sf]	
	SWITZERLAND 2					1/1 — 2/2 — 3/3 — 4/4 — 6/5	755-5405-00-Y (2-Sided)
						1/1 — 3/2 — 5/3 — 7/4 — 9/5	
Pos. 1 2 3 4 5 6 7 8 — ON: ▲ ▲ — OFF: ▼▼▼ ▼▼▼▼	TAIWAN	10		10		TWD // TAIWANESE DOLLAR // [TWD]	
						1/10	755-5412-00-Y (use Side 1)
Pos. 1 2 3 4 5 6 7 8 — ON: ▲▲▲ ▲ — OFF: ▼ ▼▼▼▼	UK 1	▼ 5TH COIN SLOT NOT AVAILABLE WITH CUSTOM PRICING ▼				GPB // UNITED KINGDOM POUNDS // [£]	
	UK 2					3/1.00 — 7/2.00	755-5407-00-Y
ATTENTION: UK 5TH COIN SLOT TIED TO 6TH CHANNEL ON ELEC. COIN MECH	UK 3	LEFT: 0.10	CENTER: 0.50	RIGHT: 1.00	4TH: 0.20	4/1.00	755-5407-01-Y*
	UK 4					1/0.50 — 2/1.00 — 3/1.50 — 5/2.00	755-5407-01
	UK 5					1/0.30 — 2/0.60 — 3/0.90 — 4/1.00	755-5407-01-Y*
	UK 6	5TH: 2£ ▲ Coin Only				1/1.00 — 3/2.00	755-5407-01
						3/2.00 — *use blank side	755-5407-01-Y*

HIGHLIGHTED = Factory Default

HIGHLIGHTED = Not Shown on Coin Card

Standard Adjustment 18, Game Pricing, continued on the next page.

Standard Adjustment 18, Game Pricing, continued.

Euro 1-12 Summary & International (Euro) Standard Pricing Select Table

CPU/SOUND PCB DIP SWITCH SW1 SETTING	COUNTRY SETTING OPTION(S)	COIN MECHANISMS (SWITCHES) COINS THRU ... SLOT: LEFT	CENTER	RIGHT	4TH	PRICING SCHEME *Number of Plays (Credits) for Price Amount Shown See "Appendix J" for Coin Cards Examples & Info!*	Requires SPI Coin Card(s) Part Number
Pos. 1 2 3 4 5 6 7 8 / ON SEEBELOW / OFF SETTINGS	Default Highlighted: Euro 1	0.50	1.00	2.00	optional 0.20 optional	EUR // EUROPEAN UNION EUROS // [€]	
Euro 1-12 are alternate settings for countries using the Euro.	Euro 2					1/0.50	755-5401-01-Y
HIGHLIGHTED = Factory Default	Euro 3					1/0.50 | 2/1.00 | 3/1.50 | 5/2.00	755-5401-02-Y
HIGHLIGHTED = Not Shown on Coin Card	Euro 4					1/0.50 | 3/1.00	755-5401-03-Y
	Euro 5					1/0.50 | 2/1.00 | 3/1.50 | 6/2.00	755-5401-04-Y
	Euro 6					1/0.50 | 3/1.00 | 4/1.50 | 7/2.00	755-5401-05-Y
	Euro 7					2/0.50	755-5401-06-Y
	Euro 8					1/1.00 | 2/2.00 | 3/3.00 | 5/4.00	755-5401-07-Y
	Euro 9					1/1.00 | 3/2.00	755-5401-08-Y
	Euro 10					1/1.00 | 2/1.50 | 3/2.00	755-5401-09-Y
	Euro 11					1/1.00 | 3/2.00 | 7/3.00	755-5401-10-Y
	Euro 12					1/1.00 | 4/2.00	755-5401-11-Y
						2/1.00 | 4/2.00 | 6/3.00 | 9/4.00	755-5401-12-Y

For a different ***Euro Pricing Scheme*** *(other than Factory Default listed below), scroll through* ***Standard Adjustment 18:*** *Euro 1-12 or CUSTOM* for new setting (reference above Euro 1-12 Summary). Keep the Country Dip Switch Setting the same as listed below.*

CPU/SOUND PCB DIP SWITCH SW1 SETTING	COUNTRY SETTING OPTION(S)	COIN MECHANISMS (SWITCHES) COINS THRU ... SLOT: LEFT	CENTER	RIGHT	4TH	EUR // EUROPEAN UNION EUROS // [€]	Requires SPI Coin Card(s) Part Number
Pos. 1 2 3 4 5 6 7 8 / ON ▲ / OFF ▼▼▼▼▼▼▼▼	Default Highlighted: AUSTRIA Euro 9	0.50	1.00	2.00		1/1.00 | 2/1.50 | 3/2.00	755-5401-09-Y
Pos. 1 2 3 4 5 6 7 8 / ON ▲ / OFF ▼▼▼▼▼▼▼▼	Default Highlighted: BELGIUM Euro 1	0.50	1.00	2.00		1/0.50	755-5401-01-Y
Pos. 1 2 3 4 5 6 7 8 / ON ▲▲ / OFF ▼▼▼▼▼▼	Default Highlighted: FINLAND Euro 8	0.50	1.00	2.00		1/1.00 | 3/2.00	755-5401-08-Y
Pos. 1 2 3 4 5 6 7 8 / ON ▲▲ / OFF ▼▼▼▼▼▼	Default Highlighted: FRANCE Euro 10	0.50	1.00	2.00		1/1.00 | 3/2.00 | 7/3.00	755-5401-10-Y
Pos. 1 2 3 4 5 6 7 8 / ON ▲▲▲ / OFF ▼▼▼▼▼	Default Highlighted: GERMANY 1 / GERMANY 2 / GERMANY 3	0.50	1.00	2.00		1/0.50 1/0.50 | 2/1.00 | 3/1.50 | 5/2.00 1/0.50 | 2/1.00 | 3/1.50 | 6/2.00	755-5401-01-Y 755-5401-02-Y 755-5401-04-Y
Pos. 1 2 3 4 5 6 7 8 / ON ▲▲▲▲ / OFF ▼▼▼▼	Default Highlighted: GREECE Euro 8	0.50	1.00	2.00		1/1.00 | 3/2.00	755-5401-08-Y
Pos. 1 2 3 4 5 6 7 8 / ON ▲ / OFF ▼▼▼ ▼▼▼▼	Default Highlighted: ITALY 1 / ITALY 2	0.50		0.50		1/0.50 1/1.00 | 3/2.00	755-5401-01-Y 755-5401-08-Y
Pos. 1 2 3 4 5 6 7 8 / ON ▲ / OFF ▼▼ ▼▼▼▼▼	Default Highlighted: NETHERLANDS Euro 3	0.50	1.00	2.00		1/0.50 | 3/1.00	755-5401-03-Y
Pos. 1 2 3 4 5 6 7 8 / ON ▲ ▲ / OFF ▼▼▼ ▼▼▼	Default Highlighted: PORTUGAL Euro 1	0.50		0.50		1/0.50	755-5401-01-Y
Pos. 1 2 3 4 5 6 7 8 / ON ▲ ▲ / OFF ▼ ▼▼ ▼▼▼	Default Highlighted: SPAIN Euro 8	0.50	1.00	2.00		1/1.00 | 3/2.00	755-5401-08-Y

HIGHLIGHTED = *Factory Default* HIGHLIGHTED = *Not Shown on Coin Card*

For the associated **Coinage Card** required *if the Factory Default Setting was changed*, view on-line at:

http://www.sternpinball.com/coinagecards.shtml

You can download and print the replacement card. *Adobe® Reader 5.0 or higher required (links on site).* Use **Yellow Card Stock: ASTROBRIGHTS® SOLAR YELLOW #65 FROM WAUSAU PAPER PRODUCTS** (Stock #22731)

#19 **MATCH PERCENTAGE:** Set between **0% – 10%** *or* **OFF**. Factory Default = **9%**. At **0%** the *Match Animation Feature* occurs at the end of the game but never awards the **Match Award** *(Standard Adjustment 20)*. Set to **OFF**, no ***Match Animation Feature*** is shown.

#20 **MATCH AWARD:** Set to **CREDIT**, **TICKET*** *or* **TOKEN***. Factory Default = **CREDIT**. *This adjustment is not shown if* ***OFF*** *is installed in* ***Match Percentage*** *(Standard Adjustment* ***19****).*

* ***Note:*** *If* ***TICKET*** *or* ***TOKEN*** *is selected, the game will require an optional Ticket or Token Dispenser and then* ***Q24 Option*** *(Standard Adj. 55) must be changed accordingly.*

#21 **BALLS PER GAME:** Set between **1 – 10**. Factory Default = **3**. Set the number of balls per game.

Standard Adjustments 22-36 continued on the next page.Standard Adjustments continued.

#22 **TILT WARNINGS:** Set between **0 – 3**. Factory Default = **2**. Set the number of Plumb Bob Tilt Switch closures before the ball in play is tilted. *Each closure generates an audible alert and/or display alert.*

#23 **CREDIT LIMIT:** Set between **4 – 50**. Factory Default = **30**. Set the maximum credits allowed.

#24 **ALLOW HIGH SCORES:** Set to **YES** *or* **NO**. Factory Default = **YES**. When set to **YES**, if a player exceeds the Default Grand Champion *or* 1-4 High Scores, the player may receive a **High Score Award** *(Standard Adjustment 25)* and enter their **3 Initials** *or* **10-Letter Name** *(Standard Adjustment 36)*. Set to **NO** to disable this feature. *The following Standard Adjustments 25-37 are not shown if **NO** is installed.*

#25 **HIGH SCORE AWARD:** Set to **CREDIT, TICKET*** or **TOKEN***. Factory Default = **CREDIT**. Set the type of award to be given to the player when the appropriate **Grand Champion Score** *or* **High Score #1 – #4** threshold *or* level is acheived. If awarding a ***CREDIT, TICKET*** *or* ***TOKEN*** is prohibited in your area, install **NO** in **Allow High Scores** (Standard Adjustment 24). *This adjustment is not shown if **NO** is installed in **Allow High Scores** (Standard Adjustment 24).*

**Note: If TICKET or TOKEN is selected, the game will require an optional Ticket or Token Dispenser and then Q24 Option (Standard Adj. 55) must be changed accordingly.*

#26 **GRAND CHAMPION AWARDS:** Set between **0 – 5**. Factory Default = **1**. Set the number of **High Score Award**(s) *(Std. Adj. 25)*, awarded for exceeding the Grand Champion Score *(Standard Adjustment 31). This adjustment is not shown if **NO** is installed in **Allow High Scores** (Standard Adjustment 24).*

#27 **HIGH SCORE #1 AWARDS:** Set between **0 – 3**. Factory Default = **1**. Set the number of **High Score Award**(s) *(Std. Adj. 25)*, awarded for exceeding the High Score #1 *(Standard Adjustment 32). This adjustment is not shown if **NO** is installed in **Allow High Scores** (Standard Adjustment 24).*

#28 **HIGH SCORE #2 AWARDS:** Set between **0 – 2**. Factory Default = **0**. Set the number of **High Score Award**(s) *(Std. Adj. 25)*, awarded for exceeding the High Score #2 *(Standard Adjustment 33). This adjustment is not shown if **NO** is installed in **Allow High Scores** (Standard Adjustment 24).*

#29 **HIGH SCORE #3 AWARDS:** Set between **0 – 1**. Factory Default = **0**. Set the number of **High Score Award**(s) *(Std. Adj. 25)*, awarded for exceeding the High Score #3 *(Standard Adjustment 34). This adjustment is not shown if **NO** is installed in **Allow High Scores** (Standard Adjustment 24).*

#30 **HIGH SCORE #4 AWARDS:** Set between **0 – 1**. Factory Default = **0**. Set the number of **High Score Award**(s) *(Std. Adj. 25)*, awarded for exceeding the High Score #4 *(Standard Adjustment 35). This adjustment is not shown if **NO** is installed in **Allow High Scores** (Standard Adjustment 24).*

#31 **GRAND CHAMPION SCORE:** Set between **1,000,000 – 1,000,000,000** *(increments of 1,000,000)*. Factory Default = **__,000,000**. Set the desired **Grand Champion Score** level a player needs to exceed to earn the **High Score Award** *(Standard Adjustment 25)*. A score higher than the default, cannot be reset by Standard Adjustment **37, HSTD Reset Count**. *The Grand Champion Score will revert to the Factory Default Score **ONLY** if a **Reset Grand Champion** is performed in the **RESET MENU** (via the **UTILITIES MENU**) or if the game is without power for more than 12 hours after the CPU/Sound PCB Coin Cell Battery is expired or removed. This adjustment is not shown if **NO** is installed in **Allow High Scores** (Standard Adjustment 24).*

#32 **HIGH SCORE #1:** Set between **1,000,000 – 1,000,000,000.** Factory Default = **__,000,000**. Set the desired **High Score #1** level a player needs to exceed to earn the **High Score Award** *(Standard Adjustment 25)*. A score higher than the default, will be reset by Standard Adjustment **37, HSTD Reset Count**. *The High Score will revert to the Factory Default Score **ONLY** if a **Reset High Scores** is performed in the **RESET MENU** (via the **UTILITIES MENU**) or if the game is without power for more than 12 hours after the CPU/Sound PCB Coin Cell Battery is expired or removed. This adjustment is not shown if **NO** is installed in **Allow High Scores** (Standard Adjustment 24).*

#33 **HIGH SCORE #2:** Set between **1,000,000 – 1,000,000,000.** Factory Default = **__,000,000**. Set the desired **High Score #2** level a player needs to exceed ... *(continued in Standard Adjustment **32** definition above).*

#34 **HIGH SCORE #3:** Set between **1,000,000 – 1,000,000,000.** Factory Default = **__,000,000**. Set the desired **High Score #3** level a player needs to exceed ... *(continued in Standard Adjustment **32** definition above).*

#35 **HIGH SCORE #4:** Set between **1,000,000 – 1,000,000,000.** Factory Default = **__,000,000**. Set the desired **High Score #4** level a player needs to exceed ... *(continued in Standard Adjustment **32** definition above).*

#36 **HSTD (HIGH SCORE TO DATE) INITIALS:** Set to **3 INITIALS** *or* **10 LETTER NAME**. Factory Default = **3 INITIALS**. When set to **3 INITIALS**, the player is allowed only 3 initials to input. When set to **10 LETTER NAME**, the player is allowed to enter 10 initials to input. *This adjustment is not shown if **NO** is installed in **Allow High Scores** (Standard Adjustment 24).*

Standard Adjustments 37-50 continued on the next page.

Standard Adjustments continued.

#37 **HSTD (HIGH SCORE TO DATE) RESET COUNT:** Set between **100 – 9900** *or* **OFF** *(increments of 100).* Factory Default = **2000.** Set the number of games between "automatic resets" of High Scores back to the Factory Defaults for ***ONLY*** Standard Adj. **32 – 35, High Score #1 – #4.** *The High Score will revert to the Factory Default Scores when the number of games stated is reached.* ***Reset High Scores*** *can be performed in the* ***RESET MENU*** *(via the* ***UTILITIES MENU****) anytime or if the game is without power for more than 12 hours after the CPU/Sound PCB Coin Cell Battery is expired or removed. This adjustment is not shown if* ***NO*** *is installed in* ***Allow High Scores*** *(Standard Adj. 24).*

#38 **FREE PLAY:** Set to **YES** or **NO.** Factory Default = **NO.** When set to **YES**, no coins are required for *Game Play.*

#39 **LANGUAGE:** Set to **ENGLISH, GERMAN, FRENCH, SPANISH** *or* **ITALIAN.** Factory Default = **ENGLISH.** Set the language for the game. Language of game is also shown in the Dot Display *(along with the Game Title and code version)* at the start-up routine which follows a game reset *or* power-up.

#40 **PLAYER LANGUAGE SELECT:** Set to **YES** *or* **NO.** Factory Default = **YES.** When set to **YES**, after the player presses the **Start Button** *(to start a game with adequate credit)*, the player has the option to choose a language by pressing either **Flipper Button** before game start *(options of languages installed are shown on the Dot Display).* ***Note:*** *If set to* ***NO*** *or if only one langauge is installed and the setting is set to* ***YES****, the game will start immediately after the* ***Start Button*** *press. Language(s) available are dependent on game destination from the factory. Other languages may be available on-line for download and installed on your game. With the proper dip switch installed, the langauge option(s) can be changed. For more information or help, call Technical Support at 800-542-5377 (708-345-7700).*

#41 **CUSTOM MESSAGE:** Set to **ON, CHANGE** *or* **OFF.** Factory Default = **ON.** *Shortcut:* ***Enter Custom Message*** *and instructions, review the Utilities Section,* ***Enter Custom Message.***

#42 **FLASH LAMP POWER:** Set to **NORMAL, OFF** *or* **DIM.** Factory Default = **NORMAL.** When set to **DIM**, the Flash Lamps impulse power is reduced by **25%** and when set to **OFF** the Flash Lamps will not flash. For Flash Lamps used in this game, **Go To Flash Lamps Menu** via the **DIAGNOSTICS MENU** *(see the Diagnostics Section).*

#43 **COIL PULSE POWER:** Set to **NORMAL, HARD** *or* **SOFT.** Factory Default = **NORMAL.** When set to **HARD**, the coil pulse power is ***increased*** by **12.5%** of the normal pulse rate. When set to **SOFT** the coil pulse power is ***decreased*** by **12.5%** of the normal pulse rate. This adjustment is provided to compensate for *Low Line* or *High Line voltage* conditions where the solenoids (coils) appear to *kicking too weak or too hard.* Adjust as required.

#44 **KNOCKER VOLUME:** Set to **NORMAL, OFF** *or* **LOW.** Factory Default = **NORMAL.** When set to **LOW**, the volume is decreased 50%. When set to **OFF**, no sound is heard when the "knocker" is sounded. Test the knocker sound in the **Fire Knocker** Test via the **DIAGNOSTICS MENU** *(see Section 3, Chapter 2,* ***GO TO DIAGNOSTICS MENU****, Page 19).*

#45 **GAME RESTART:** Set to **YES** *or* **NO.** Factory Default = **YES.** When set to **YES**, a new game may be started during any ball after the first ball is completed *(if credits allow).* Pressing the Start Button during the first ball will add additional players *(up to 4, if credits allow).* When set to **NO**, the game disables the Start Button after the first ball until the final ball is in play.

#46 **BILL VALIDATOR:** Set to **YES** *or* **NO.** Factory Default = **NO.** When set to **YES**, in ***Game Attract Mode*** an "Insert Bill Animation" is shown in the display *(or just the absense of the Coin Animation).* When set to **NO**, an "Insert Coin Animation" is shown. ***(This adjustment will appear when implemented).***

#47 **MUSIC VOLUME:** Set between **1 – 15.** Factory Default = **1.** After volume is set via Service Buttons this adjustment can be utilized to adjust the background music *(1 all the way on, 15 all the way off)* while keeping the Special Sound Effects at the same level.

#48 **BALL SAVE TIME:** Set between **0:01 – 0:15, AUTO** *or* **NO BALL SAVES.** Factory Default = **0:05.** When set to **NO BALL SAVES** this feature is unavailable. Set between **0:01** through **0:15** *(single increments)* for the ball to be sent back into play if the time set is not met *(per ball).* Set to **AUTO** to automatically adjust the Ball Save Timer based on the average ball time.

#49 **TIMED PLUNGER:** Set to **OFF** *or* **0:01 – 1:00.** Factory Default = **OFF.** The plunger will "Autoplunge" the ball *(at the time set)* when the ball is at the beginning of play, waiting for the player.

#50 **FLIPPER BALL LAUNCH:** Set to **OFF, LEFT FLIPPER, RIGHT FLIPPER, EITHER FLIPPER** *or* **BOTH FLIPPERS.** Default is **OFF.** This feature allows the player to operate the Auto Ball Launch with the Flipper Button(s) depending on which setting is chosen.

Standard Adjustments 51-63 continued on the next page.

#51 **COINDOOR BALL SAVER:** Set to **YES** *or* **NO**. Factory Default = **NO**. When set to **NO**, this feature is not available. When set to **YES**, this feature allows the Coin Door to be opened during game play; the ball will drain but the game will be placed "on hold". When the Coin Door is closed, the pinball will return to the Shooter Lane, and the game will resume. *Useful at locations where technicians change the cash box regularly at exact times of the day where players can be on the game.*

#52 **COMPETITION MODE:** Set to **YES** *or* **NO**. Factory Default = **NO**. When set to **NO**, this feature is not available. Set to **YES**, this feature will equalize random game features and global score values during multi-player games by predetermined competition rules set by programming. If an **Install Competition** was made via the **INSTALLS MENU** *(which automatically changes this setting to* ***YES****)*, and this setting was changed back to **NO**, the ***Competition Mode*** will be turned **OFF** *(cancelled)*.

#53 **CONSOLATION BALL:** Set to **YES** *or* **NO**. Factory Default = **YES**. When set to **YES**, the ***EXTRA BALL*** *(lamp insert, location varies)* will be lit on the last ball in play, if certain programming criteria is met.

#54 **FAST BOOT:** Set to **YES** *or* **NO**. Factory Default = **YES**. When set to **NO** or if you hold both **Flipper Buttons** during Power-Up, this feature is not available and will display all normal Power-Up screens. When set to **YES**, the game will not display the normal informative Power-Up screens, specifically the CPU Version screen and the Location/Game ID screen. Regardless of the setting, normal Power-Up safety checks are still performed. ***(This adjustment will appear when implemented).***

#55 **Q24 OPTION:** Set to **COIN METER, TOKEN DISPENSER** *or* **KNOCKER**. Factory Default = **COIN METER**. This Coil (Solenoid) Location is left "open" at the Factory to allow for these optional Mechanisms to be added to the game. If selecting **TOKEN DISPENSER**, Standard Adjustments 3, 14, 20 & 25 should be changed to **TOKEN**. *Call Tech. Support at 1-800-542-5377 if more information is required on this option.*

#56 **TICKET DISPENSER:** Set to **YES** *or* **NO**. Factory Default = **NO**. *This adjustment is required only for games which have an optional Deltronics (DL-1275-2 PCB Style, SPI Part Nr. 515-7275-00) Ticket Dispenser installed. Unique CPU Sound Bd. Dip Switch Setting required, changes the Default to* ***YES****.*

#57 **PLAYER COMPETITION:** Set to **YES** *or* **NO**. Factory Default = **YES**. ***Competition Mode*** unrandomizes feature events, and standardizes game play and rule sets *(varies from game to game)* for fair competitions. With at least one credit posted, *or* with the game set for 'FREE PLAY', during the game-over Attract Mode, press the **Left Flipper Button** and hold it in for approximately one second. The following message will appear on the display for approximately 10 seconds: '**COMPETITION MODE READY ... PRESS START NOW**'. If a game is started *(either by pressing the 'START' button for a regular game, or by pressing the 'TOURNAMENT START' button for a tournament game)* while this message appears on the display, then competition mode will be enabled for all players during the game. General rules are covered in the Instruction Card. Other *Hints and/or Rules* can be made known on this game either visually *(the Dot Display or Flashing Light Inserts) or* can be audible.

#58 **TEAM SCORES:** Set to **YES** *or* **NO**. Factory Default = **NO**. Set to **YES**, then Team Play will be made available. ***Team Play only works in a 4-Player Game.*** The totals for Players 1 / 3 (Team 1) & Players 2 / 4 (Team 2) are then displayed individually ***as well as*** the combined score for **BOTH TEAMS** to enable **Team Play (Doubles)**. ***(This adjustment will appear when implemented).***

#59 **LOCATION ID:** Set between **0** to **9999**. Factory Default = **0**. This adjustment allows the operator to assign a location identification number to the audit print-out sheet. *(Will not be affected by a Factory Reset.)*

#60 **GAME ID:** Set between **0** to **9999**. Factory Default = **0**. This adjustment allows the operator to assign a game identification number to the audit print-out sheet. *(Will not be affected by a Factory Reset.)*

#61 **TIME FORMAT:** Set to **12-HOUR** *or* **24-HOUR**. Factory Default = **12-HOUR**. This adjustments determines how the time is displayed. *Time used for Tournament and Data Dumps where a time stamp is required.*

#62 **COIN INPUT DELAY:** Set between **30** to **60** *or* **OFF**. Factory Default = **30**. This adjustment creates a short time delay between the moment the coin is inserted into the **Coin Slot** to the moment the CPU/Sound PCB registers the coin *(30 = approxiamately 1/2 second)*.

#63 **LOST BALL RECOVERY:** Set to **YES** *or* **NO**. Factory Default = **NO**. Set to **YES**, at the start of the 5th consecutive ball search *(with no scoring between searches)*, the game will consider any balls in play to be permanently lost and will attempt to recover from this situation by serving a new ball into play from the ball trough. Set to **NO** *(to suppress this adjustment behavior)* for the game to perform the "ball search" indefinitely until the lost balls are found or replaced.

STANDARD ADJUSTMENTS [#1 – #63] ▼

Nr.	STANDARD ADJUSTMENT NAME	USA DEFAULT	YOUR SETTING
1	REPLAY TYPE	AUTO	
2	‡ REPLAY PERCENTAGE	10%	
3	‡ REPLAY AWARD	CREDIT	
4	‡ REPLAY LEVELS	1	
5	‡ AUTO REPLAY START	__,000,000	
6	‡ DYNAMIC REPLAY START	__,000,000	
7	‡ REPLAY LEVEL #1	__,000,000	
8	‡ REPLAY LEVEL #2	__,000,000	
9	‡ REPLAY LEVEL #3	__,000,000	
10	‡ REPLAY LEVEL #4	__,000,000	
11	‡ REPLAY BOOST	YES	
12	SPECIAL LIMIT	1	
13	‡ SPECIAL PERCENTAGE	10%	
14	SPECIAL AWARD	CREDIT	
15	FREE GAME LIMIT	5	
16	EXTRA BALL LIMIT	5	
17	‡ EXTRA BALL PERCENTAGE	25%	
18	GAME PRICING	USA 10	
19	MATCH PERCENTAGE	9%	
20	MATCH AWARD	CREDIT	
21	BALLS PER GAME	3	
22	TILT WARNINGS	2	
23	CREDIT LIMIT	30	
24	ALLOW HIGH SCORES	YES	
25	HIGH SCORE AWARD	CREDIT	
26	GRAND CHAMPION AWARDS	1	
27	HIGH SCORE #1 AWARDS	1	
28	HIGH SCORE #2 AWARDS	0	
29	HIGH SCORE #3 AWARDS	0	
30	HIGH SCORE #4 AWARDS	0	
31	GRAND CHAMPION SCORE	__,000,000	

Nr.	STANDARD ADJUSTMENT NAME	USA DEFAULT	YOUR SETTING
32	HIGH SCORE #1	__,000,000	
33	HIGH SCORE #2	__,000,000	
34	HIGH SCORE #3	__,000,000	
35	HIGH SCORE #4	__,000,000	
36	HSTD INITIALS	3 INITIALS	
37	HSTD RESET COUNT	2000	
38	FREE PLAY	NO	
39	LANGUAGE	ENGLISH	
40	PLAYER LANGUAGE SELECT	YES	
41	CUSTOM MESSAGE	ON	
42	FLASH LAMP POWER	NORMAL	
43	COIL PULSE POWER	NORMAL	
44	KNOCKER VOLUME	NORMAL	
45	GAME RESTART	YES	
46	BILL VALIDATOR	NO	
47	MUSIC VOLUME	1	
48	BALL SAVE TIME	0:05	
49	TIMED PLUNGER	OFF	
50	FLIPPER BALL LAUNCH	OFF	
51	COINDOOR BALL SAVER	NO	
52	COMPETITION MODE	NO	
53	CONSOLATION BALL	YES	
54	FAST BOOT	YES	
55	Q24 OPTION	COIN METER	
56	TICKET DISPENSER	NO	
57	PLAYER COMPETITION	YES	
58	TEAM SCORES	NO	
59	LOCATION ID	0	
60	GAME ID	0	
61	TIME FORMAT	12-HOUR	
62	COIN INPUT DELAY	30	
63	LOST BALL RECOVERY	YES	

Factory Defaults Settings are subject to change during production *(especially Standard Adjustments 2, 4, 5, 13, 16-17, 19, 31-35 & 47).*
‡ Not all Standard Adjustments are shown. Depending on the setting (whether Factory Default or if changed by the operator), associated adjustments do not appear, if not required. ***Note:*** *If* ***Game Dip Switch*** *other than USA is installed, different Defaults will appear.*

GAME

Feature Adjustments [#1 – #+]

To initiate, from the **ADJUSTMENTS MENU**, select the "GAME" *Icon.* The Dot Matrix Display will indicate the *adjustment number (in this group), adjust. name, adjust. setting* and *comment line.* The current adjustment will remain on the display until the next adjustment is viewed or when this sub-menu is exited.

>>> **FACTORY RESET** *or* **CODE UPDATE NOTE:** Don't forget, any changes you make to your adjustments will revert back to the Factory Default settings if you perform a Factory Reset or update your Game Code. *See Utilities Section (**GO TO RESETS MENU** and **GO TO USB MENU**).*

View the Coils Detailed Chart Menu to see if this game is Shaker Motor Enabled. *If it is, set the options in the Feature Adjustment as seen below. (typically the last one).*

\# **SHAKER MOTOR (OPTIONAL) :** Set to **NONE, MINIMAL USE, MODERATE USE** *or* **MAXIMAL USE.** Factory Default = **MODERATE USE.** *Set to any of the varying "**... USES**" if an Optional Shaker Motor Kit (SPI Part Number **502-5027-00**) was installed correctly in this pinball machine. See the assembly (kit) on the last page of Blue Pages (Major Assemblies). Also see Shaker Motor Coil (Q8) in the Coils Detailed Chart Table at the begining of this Service Game Manual or the beginning of the Yellow Pages.*

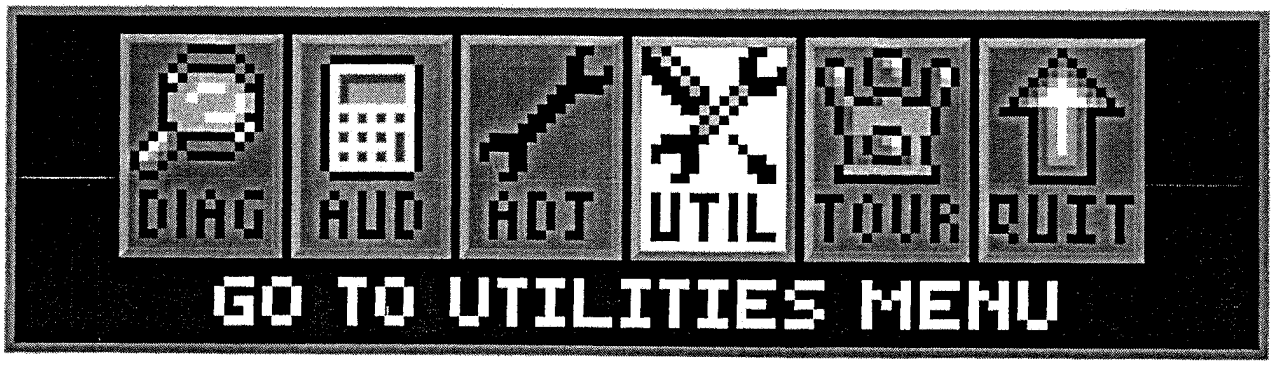

To initiate, from the **MAIN MENU**, select the "UTIL" *Icon.* The **UTILITIES MENU** provides ways to quickly and easily customize your game with **Installs** *(pre-sets for game Standard & Feature Adjustments),* set-up a **Custom Message** *(short-cut to Standard Adjustment **41, Custom Message**),* set-up **Custom Pricing** *(short-cut to Standard Adjustment **18,** to the **Custom Pricing Sub-Menu**),* set-up the **Date and Time** *(required if the date and time is needed to be accurate for data dumps and for tournaments),* reset certain particular game data *or* perform a complete **Factory Reset** and to download game data, update or backup game code in the **USB MENU.**

All **UTILITIES, INSTALLS, RESETS MENU** and **USB MENU** *Icons* and there usages are explained throughout this chapter in the same order as seen in the Dot Matrix Display. ***NOTE:*** Depending on Game Type, Version, selections made, Dip Switch settings, location and/or areas, some *Icons* may appear non-functional *or* may not appear at all. ***Installs (Adjustments), Icons** and/or **functions, order** and **operation are subject to change. If in doubt use the Factory Default Settings** (review **Install Factory** on the next page).*

In displays where changes can be made *or* to perform a function, use the **GREEN Button** to go **[BACK]**, exit *or* escape, the **RED Buttons** to [< / –] MOVE BACK / LEFT / [+ / >] MOVE FORWARD / RIGHT to view the next audit in the group, and the **BLACK Button** to **[SELECT]** the sub-menus.

Go To Installs Menu

To initiate, from the **UTILITIES MENU**, select the "INST" *Icon.* The **INSTALLS MENU** provides **13 Installs** to vary **Game Play Difficulty** *(set with Feature Adjustments) or* **Game Play Type** and **Install Factory** *(restores all adjustments to Factory Defaults).*

For **detailed customization** *or* to check current **Adjustments Defaults** *(either changed by YOU in the Adjustments Menu or by this* **INSTALLS MENU** *or for Factory Default Settings), see Section **3**, Chapter **4, GO TO ADJUSTMENTS MENU.*** After completing one or more of the **Installs** in this chapter, go back to the **ADJUSTMENTS MENU** to see which **Standard** *and/or* **Feature Adjustments** have changed *(Feature Adjustments and/or settings are subject to change during production, and may differ than what is described in the tables at the end of this chapter). The Dot Display will indicate if a setting is a Factory Default or not. If the settings are not to your liking, perform **one** of the following:*

1.: **Manually** change the **Standard & Feature Adjustments** Settings *(perform this task in the **ADJUSTMENTS MENU,** see the Adjustments Section).*

2.: **Install Factory** *(see the last install)* on how to reset all of the **Standard & Feature Adjustments** back to the *Factory Default Settings.*

Multiple **Installs can be set** to vary game play; however, for **Installs** that have *one or more* Adjustments in common, the ***last*** "Install" selected & *activated,* will **supersede** any previously changed Adjustment(s) from any prior **Installs.** Any adjustments which you changed and are not affected by the Install will remain as set.

For example, if you want a **5-BALL Game** *set to* **EXTRA EASY**: Select and *activate* the "5BAL" *Icon* first (which will typically change any ***Feature*** Difficulty Adjustments to **HARD**), then select & *activate* the "X.EZ" *Icon* to **change back** the Difficulty Adjustments to **EXTRA EASY.** However, if the "X.EZ" *Icon* was selected & *activated* first, then the "5BAL" *Icon* was selected & *activated,* the game will be set to a **5-BALL Game** *set to* **HARD.**

Remember, use the **GREEN Button** to go **[BACK]**, exit *or* escape and the **BLACK Button** to **[SELECT]** to INSTALL your new setting(s).

Install Extra Easy

To initiate, from the **INSTALLS MENU**, select the "X.EZ" *Icon.* The Dot Matrix Display will indicate the **INSTALL EXTRA EASY.** Follow the on-screen prompts to perform the **Install.** Set the **Game Play Difficulty** level.

Installs Menu continued on the next page.

Installs Menu continued from previous page.

Install Easy

To initiate, from the **INSTALLS MENU**, select the "EASY" *Icon*. The Dot Matrix Display will indicate the **INSTALL EASY**. Follow the on-screen prompts to perform the **Install**. Set the **Game Play Difficulty** level.

Install Medium (Normal or Factory Settings)

To initiate, from the **INSTALLS MENU**, select the "FACT" *Icon*. The Dot Matrix Display will indicate the **INSTALL MEDIUM**. Follow the on-screen prompts to perform the **Install**. Set the **Game Play Difficulty** level.

Install Hard

To initiate, from the **INSTALLS MENU**, select the "HARD" *Icon*. The Dot Matrix Display will indicate the **INSTALL HARD**. Follow the on-screen prompts to perform the **Install**. Set the **Game Play Difficulty** level.

Install Extra Hard

To initiate, from the **INSTALLS MENU**, select the "X.HD" *Icon*. The Dot Matrix Display will indicate the **INSTALL EXTRA HARD**. Follow the on-screen prompts to perform the **Install**. Set the **Game Play Difficulty** level.

Install 3-Ball or 5-Ball

To initiate, from the **INSTALLS MENU**, select either the "3BAL" or "5BAL" *Icons*. The Dot Matrix Display will indicate the **INSTALL 3-BALL** or **5-BALL** depending on choice. Follow the on-screen prompts to perform the **Install**. Set the **Game Play Type** to 3 Balls per game *Factory Default is 3 Balls per game, not including extra balls earned by the player, if any).*

Install Competition

To initiate, from the **INSTALLS MENU**, select the "COMP" *Icon*. The Dot Matrix Display will indicate the **INSTALL COMPETITION**. Follow the on-screen prompts to perform the **Install**.
Set the **Game Play Type** to "Tournament" Rules. *Programming varies and is subject to change.*

Install Director's Cut

To initiate, from the **INSTALLS MENU**, select the "DCUT" *Icon*. The Dot Matrix Display will indicate the **INSTALL DIRECTOR'S CUT**. Follow the on-screen prompts to perform the **Install**.
Set the **Game Play Type** to programmer's choice. *Programming varies and is subject to change.*

Install Home Play

To initiate, from the **INSTALLS MENU**, select the "HOME" *Icon*. The Dot Matrix Display will indicate the **INSTALL HOME PLAY**. Follow the on-screen prompts to perform the **Install**.
Set the **Game Play Type** to "Home" Rules. *Programming varies and is subject to change.*

Install Novelty

To initiate, from the **INSTALLS MENU**, select the "NOV" *Icon*. The Dot Matrix Display will indicate the **INSTALL NOVELTY**. Follow the on-screen prompts to perform the **Install**.
********** This setting is recommended where local laws restrict certain game features. **********
Set the **Game Play Type** to "Restricted" Rules. *Programming varies and is subject to change.*

Install Add-A-Ball

To initiate, from the **INSTALLS MENU**, select the "A.A.B." *Icon*. The Dot Matrix Display will indicate the **INSTALL ADD-A-BALL**. Follow the on-screen prompts to perform the **Install**.
********** This setting is recommended where local laws restrict certain game features. **********
Set the **Game Play Type** to "Restricted" Rules. *Programming varies and is subject to change.*

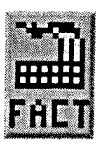

Install Factory

To initiate, from the **INSTALLS MENU**, select the "FACT" *Icon*. The Dot Matrix Display will indicate the **INSTALL FACTORY**. Follow the on-screen prompts to perform the **Install**. ⚠**CAUTION!** All **Standard** *and* **Feature Adjustments** which were changed in the **INSTALLS MENU** *or* **ADJUSTMENTS MENU** are returned to the **Factory Defaults** *(as indicated in the Dot Display in the **ADJUSTMENTS MENU**). Note: To perform a complete **Factory Reset, GO TO THE RESETS MENU**. Escape back to the **UTILITIES MENU**, select the "RESET" Icon, then select the "FACT" Icon in the **RESETS MENU** (review the end of this section, **Reset Factory Settings**).*

Enter Custom Message

To initiate, from the **UTILITIES MENU**, select the "ABCD CUST MSG" *Icon.* The **SET CUSTOM MESSAGE** *(a short-cut for Standard Adjustment 41, **Custom Message**)* provides an opportunity to have a text message appear in the the **Attract Mode**. Follow the on-screen prompts to complete [END].

Remember, use the **GREEN Button** to go **[BACK]**, exit *or* escape, the **RED Buttons** to [< / –] MOVE LEFT / CHOOSE NEXT [+ / >] MOVE RIGHT / CHOOSE PREVIOUS, and the **BLACK Button** to **[SELECT]** *as 'OK'.*

Set Custom Pricing

To initiate, from the **UTILITIES MENU**, select the "PRIC" *Icon.* The **CUSTOM PRICING MENU** *(a short-cut for Standard Adjustment 18, **Game Pricing**, and setting selected is **CUSTOM**)* provides an opportunity to set **Custom Pricing**.

Note ! ***MONETARY AMOUNT MUST BE SELECTED FIRST!*** Press [BACK] to – DECREASE *or* **[SELECT]** to + INCREASE the **[< $ >] monetary amount** *(e.g. look at the right side of the display from **$0.25** to **$0.50**).* Press [< / –] to – DECREASE *or* [+ / >] to + INCREASE the **credit quantity** *(e.g. look at the left side of the display from **0 CREDITS AT:** to **1 CREDIT AT:**).*

IF EXAMPLE CUSTOM PRICING SETTING DESIRED IS :
1 Play for **$0.50**, 3 Plays for **$1.00** and 7 Plays for **$2.00**
THEN YOU WILL NEED TO PERFORM THE FOLLOWING :

REMINDER
In these menus:
Press [BACK] to – DECREASE [< $]
Press [SELECT] to + INCREASE [$ >]

Step 1 The starting display appears as below if no prior **Custom Pricing** was installed.

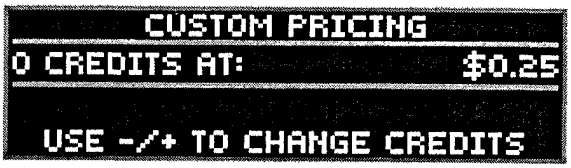

Step 2 Press **[SELECT]** to + INCREASE to **$0.50.**
Press [+ / >] to + INCREASE to **1 CREDIT AT:**

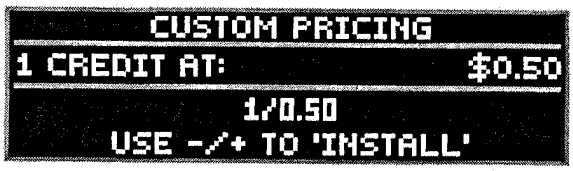

Step 3 Press **[SELECT]** to + INCREASE to **$1.00.**
Press [+ / >] to + INCREASE to **2 CREDITS AT:**

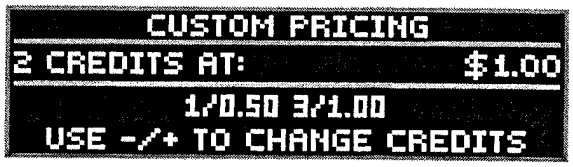

Step 4 Press **[SELECT]** to + INCREASE to **$2.00.**
Press [+ / >] to + INCREASE to **4 CREDITS AT:**

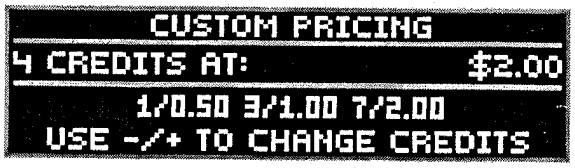

Step 5 Press **[SELECT]** to + INCREASE the amount once *(example = $2.25).*

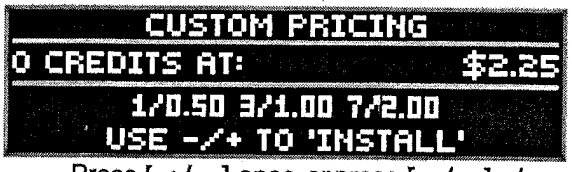

Press [< / –] once *or* press [+ / >] *eleven times until INSTALL appears.*

Step 6 Press **[SELECT]** to INSTALL.
Press [< / –] / [+ / >] *or* [BACK] to edit.

Step 7 Press **[SELECT]**, press [BACK] twice to exit the **SERVICE MENU** with your **Custom Pricing** installed.

To correct or make new changes, reenter, which brings you to **Step 6.** Press [BACK] repeatedly until the monetary amount shown is the desired amount and then continue following the above steps with your new or corrected settings. *If you are still having difficulty or if you have any questions, please call Technical Support 800-542-5377 or 708-345-7700, option 1.*

Set Date / Time

To initiate, from the **UTILITIES MENU**, select the "TIME" *Icon.* The **SET TIME MENU** appears with the **MONTH** flashing. Setting the date and time is required for 'Data Dumps' and Tournament Start and End Dates. If the setting of Standard Adjustment **61**, **Time Format**, is set to **12-HOUR** *(Factory Default)* the time will be expressed in the **AM / PM format**. If Standard Adjustment **61**, **Time Format**, is set to **24-HOUR** the time will be expressed in the **24-hour format**.

Go To Resets Menu

To initiate, from the **UTILITIES MENU**, select the "RESET" *Icon.* The **RESETS MENU** provides six (6) functions to reset *only the* **Coin Audits**, reset *only the* **Game Audits**, reset *only the* **Grand Champion Score**, reset *only the* **High Score(s)**, reset *only the* paid **Credits** *(includes Service Credits) or* to reset ***ALL DATA*** back to the **Factory Default Settings**.

Reset Coin Audits

To initiate, from the **RESET MENU**, select the "COIN" *Icon.* ⚠ **ONLY** the **Coin Audits** [Earnings Audits **5–12**], will be reset to zero (0), *Factory Default Settings.* Follow the on-screen prompts to perform the **Reset**.

Reset Game Audits

To initiate, from the **RESET MENU**, select the "AUD" *Icon.* ⚠ **ONLY** the **Game Audits** [Earnings Audits **1–4**, Standard Audits **1–59** and Feature Audits **1–XX***], will be reset to zero (0), *Factory Default Settings.* Follow the on-screen prompts to perform the **Reset**. **varies per game title.*

Reset Grand Champion (Score)

To initiate, from the **RESET MENU**, select the "GC" *Icon* ⚠ **ONLY** the **Grand Champion Score** [adjustable via Standard Adjustment **31**], will be reset to *Factory Default Setting.* Follow the on-screen prompts to perform the **Reset**.

Reset High Scores

To initiate, from the **RESET MENU**, select the "HSTD" *Icon.* ⚠ **ONLY** the **High Score(s)** [adjustable via Standard Adjustments **32–35**], will be reset to *Factory Default Setting(s).* Follow the on-screen prompts to perform the **Reset**. ***Note:*** *High Scores (but not Grand Champion Score) are reset automatically every 2,000 games (Factory Default Setting) [adjustable via Standard Adjustment 37,* ***HSTD Reset Count*** *].*

Reset Credits

To initiate, from the **RESET MENU**, select the "CRED" *Icon.* ⚠ **ONLY** the **Credits** *(includes Service Credits)* [adjustable via Standard Adjustment **23**, **Credit Limit**], will be reset to *zero (0), Factory Default Settings.* Follow the on-screen prompts to perform the **Reset**.

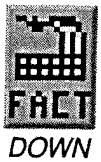

Reset Factory Settings

To initiate, from the **RESET MENU**, select the "FACT" *Icon.* ⚠ **ALL GAME DATA IS RESET!** *(with the exception of Earnings Audit 13, Software Meter).* ***NOTE:*** *IF YOU HAD* ***SET-UP CUSTOM PRICING*** *OR HAD CHANGED ANY ADJUSTMENTS OR* ***PERFORMED INSTALLS****, IT IS SUGGESTED TO WRITE DOWN YOUR CHANGES PRIOR TO THE FACTORY RESET.* Follow the on-screen prompts to perform the **Reset**.

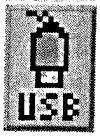

Go To USB Menu

To initiate, from the **UTILITIES MENU**, select the "USB" *Icon.* The **USB MENU** provides three (3) functions to download game data, update your game code or backup your code onto a USB Memory Stick. *Review the inside cover for information on how to update your game code.*

Update Game Code

To initiate, from the **USB MENU**, select the "UPDT" *Icon.* Follow the on-screen prompts *or* review the inside cover for more information.

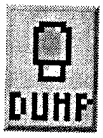

Dump Audits to USB

To initiate, from the **USB MENU**, select the "DUMP" *Icon.* Follow the on-screen prompts to perform a **Data Dump** (download). ***Note:*** *If Icon is not present, access via the Audits Menu, see the Audits Section.*

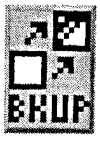

Backup to USB Memory Stick

To initiate, from the **USB MENU**, select the "BKUP" *Icon.* Follow the on-screen prompts to perform a **Backup** (game code only). This backup feature does not retain adjustments and/or settings changes made.

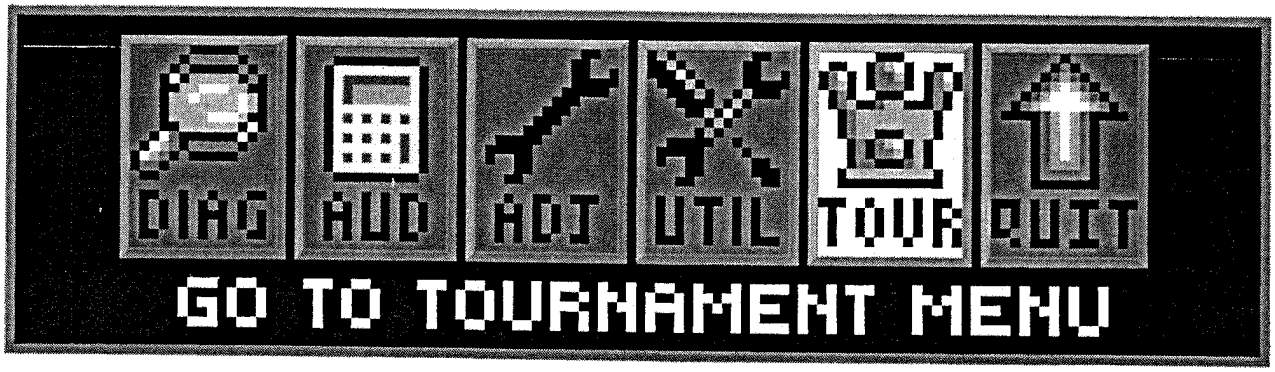

To initiate, from the **MAIN MENU**, select the "TOUR" *Icon*. The **TOURNAMENT MENU** provides ways to quickly and easily start and stop a tournament. Also, tournament data can be viewed *(audits, prize info, etc.)*.

All **TOURNAMENT MENU** *Icons* and there usages are explained throughout this chapter in the same order as seen in the Dot Matrix Display. ***NOTE:*** Depending on Game Type, Version, selections made, Dip Switch settings, location and/or areas, some *Icons* may appear non-functional *or* may not appear at all. ***Icons** and/or **functions, order** and **operation are subject to change.***

In displays where changes can be made *or* to perform a function, use the **GREEN Button** to go **[BACK]**, exit *or* escape, the **RED Buttons** to [< / –] HIGHLIGHT PREVIOUS *or* DECREASE / [+ / >] HIGHLIGHT NEXT *or* INCREASE to highlight the desired option, and the **BLACK Button** to **[SELECT]** it *or* activate.

Start Tournament

To initiate, from the **TOURNAMENT MENU**, select the "STRT" *Icon*. The **START TOURNAMENT MENU** allows the operator to start a tournament. Select **QUICK START** *or* **CUSTOM** Tournament Start. For the first time Tournament Set-Up, it is recommended to select **CUSTOM**. Follow the on-screen prompts. After completion of all options in **QUICK START** *or* **CUSTOM**, the Tournament is started, the **START TOURNAMENT MENU** is exited and returns to the **TOURNAMENT MENU**.

QUICK START :

Increase or decrease the: • **DAYS, HOURS** *and* **MINUTES** • **PRIZE POOL $ (DOLLAR)** *and* **¢ (CENT) AMOUNT** • **INCREMENT THE PRIZE POOL PER PLAY INCREASES $** *and* **¢ AMOUNT**

CUSTOM START :

- Confirm the current date and time *(if it was not set previous via the **UTILITIES MENU** it can be set-up in this display as well)*. Enter the **MONTH, DAY, YEAR** and **TIME**
- Choose the Tournament **Start** Date: **MONTH, DAY, YEAR** and **TIME**
- Choose the Tournament **End** Date: **MONTH, DAY, YEAR** and **TIME**

- Choose the **CREDITS** per play desired (01-10). Set the maximum number of *Credits* that may be accumulated per game. ***Note:** The current pricing is displayed; to change pricing **GO TO THE ADJUSTMENTS MENU.***

Increase or decrease the: • **PRIZE POOL $ (DOLLAR)** *and* **¢ (CENT) AMOUNT**
• **INCREMENT THE PRIZE POOL PER PLAY INCREASES $** *and* **¢ AMOUNT**
• **MAXIMUM (CAP) PRIZE POOL $** *and* **¢ AMOUNT.**

- Increase or decrease the number of **PRIZES** (01-05 **HIGH SCORE**; 02-05 **B'N'W**). Set the maximum # of *Prize Positions* to be awarded during a Tournament. ***Selections are as follows** (% distribution cannot be changed):*

		HIGH SCORE:
Set to **01**	1 Winner	**100%** (1) Prize Pool
Set to **02**	2 Winners	**65%** (1) **35%** (2)
Set to **03**	3 Winners	**50%** (1) **30%** (2) **20%** (3)
Set to **04**	4 Winners	**50%** (1) **25%** (2) **15%** (3) **10%** (4)
Set to **05**	5 Winners	**50%** (1) **20%** (2) **15%** (3) **10%** (4) **5%** (5)

		BUMP N' WIN :
		Cannot set to 01. Minimum of 2 winners required.
Set to **02**	2 Winners	**65%** (1) **35%** (2)
Set to **03**	3 Winners	**50%** (1) **25%** (2) **25%** (3)
Set to **04**	4 Winners	**40%** (1) **20%** (2) **20%** (3) **20%** (4)
Set to **05**	5 Winners	**40%** (1) **15%** (2) **15%** (3) **15%** (4) **15%** (5)

- Select the **AWARD TYPE** (CASH, POINTS, PRIZE, TICKETS *or* NONE). Select **CASH** for the displays to represent the Prize Pool amount *(based on Jackpot Base and Max.)* in ***$Dollars.*** Select **POINTS** for the display to represent the Prize Pool amount in ***Points.*** Select **PRIZE**, if applicable. Select **TICKET** for the display to represent the Prize Pool amount in ***Tickets.*** Select **NONE** ***NOT TO*** represent anything.

Custom Start continued on the next page.

CUSTOM START Continued.

*The following option is available only if **CASH** was selected as the **AWARD TYPE**.*

- Select the option to **SHOW PLAYER CASH** (YES *or* NO). Select **YES** for the display to represent the >>> **previous** <<< Tournament Winners & Cash amount *(or Points, Prizes, etc.)* will show in the ***Attract Mode***.

- Select the kind of **TOURNAMENT** desired (BUMP 'N' WIN *or* HIGH SCORE).

*The following options are available only if **BUMP 'N' WIN** was selected as the **TOURNAMENT TYPE**.*

- Select *or* confirm the **BASE POINT AMOUNT** (00 *or* 1,000,000 – 4,294,967,295 increments of 1,000,000.
- Select *or* confirm the **RANGE AMOUNT** (00 *or* 1,000,000 – 4,294,967,295 increments of 1,000,000).

- Select the **BALLS** per game (1 – 10).

STOP TOURNAMENT

To initiate, from the **TOURNAMENT MENU**, select the "STOP" *Icon*. The **STOP TOURNAMENT MENU** allows the operator to stop a tournament. ***Note:*** *This Icon only appears if a Tournament was set-up and is running (in place of the Start Icon).*

STOP TOURNAMENT ARE YOU SURE?

- Use the **BLACK Button** to **[SELECT]** to confirm. Press the **BLACK Button** again to continue.

The **STOP TOURNAMENT MENU** is exited and returns to the **TOURNAMENT MENU**.

VIEW TOURNAMENT DATA

To initiate, from the **TOURNAMENT MENU**, select the "DATA" *Icon*. If no data is available, the display will indicate NO PREVIOUS DATA. Press the GREEN Button to escape **[BACK]** to the **TOURNAMENT MENU**.

TOURNAMENT AUDITS [#1 – #14]

To initiate, from the **TOURNAMENT MENU**, select the "AUD" *Icon*. The Dot Matrix Display will indicate the *audit number (in this group), audit name* and the *audit total or value*. The current audit will remain on the display until the next audit is viewed or when this sub-menu is exited.

01	**TOTAL PLAYS :** Total number of *Regular* and *Tournament Games* played while a *Tournament is in progress.* This total is derived by adding the below Tournament Audit 02 with ***Regular Plays.***
02	**TOURNAMENT PLAYS :** Total number of *Tournament Games* played while a *Tournament is in progress.*
03	**TOTAL QUALIFYING PLAYS :** Total number of times a player qualified *(invited to enter name).*
04	**TOTAL GAME EARNINGS :** Total Gross Earnings *accepted,* while a *Tournament is active (in progress).*
05	**TOTAL TOUR. EARNINGS :** Earnings *(Audit 04 less Reg. Game Earnings)* while a *Tournament is in progress.*
06	**PRIZE POOL TOTAL :** Total Prize Pool *(Jackpot)* Amount to be paid out while a *Tournament is in progress.*
07	**NET EARNINGS :** Provides the total Net Earnings *(Gross Earnings less Prize Pool)* while a *Tournament is active.*
08	**ACCUM. TOTAL PLAYS :** Accumulative total amount of *Regular & Tournament Games* played since the first Tournament was played.
09	**ACCUM. TOUR. PLAYS :** Accumulative total amount of *Tourn. Games* played since 1st Tournament was played.
10	**ACCUM. QUALIFYING PLAYS :** Accumulative total number of times a player qualified *(invited to enter name).*
11	**ACCUM. EARNINGS :** Total Gross Earnings *accepted,* since the first Tournament was played.
12	**ACCUM. TOUR EARNINGS :** Accumulative total Tournament Game Earnings since the first Tournament was played.
13	**ACCUM. JACKPOT :** Accumulative total of Prize Pool Amounts paid out since the first Tournament was played.
14	**# TOURNAMENTS :** Number of Tournaments *(not individual Games)* since the first Tournament was played.

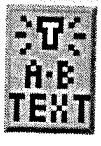

SIGN MESSAGES A–B

To initiate, from the **TOURNAMENT MENU**, select the "A-B TEXT" *Icon. At time of print, menu non-functional. If made available in future code updates, this menu will allow the operator to display "Location" and "Prize" Messages.* Follow the on-screen prompts to complete [END].

Remember, use the **GREEN Button** to go **[BACK]**, exit *or* escape, the **RED Buttons** to [< / –] MOVE LEFT / CHOOSE NEXT [+ / >] MOVE RIGHT / CHOOSE PREVIOUS, and the **BLACK Button** to **[SELECT]** *as 'OK'.*

This page is intentionally blank.

Backbox Wiring

- Coils Detailed Chart Table
- Backbox I/O Power Driver Board Detailed Wiring Diagram
- Backbox Board Layout Wiring Diagram
  - 128 X 32 Dot Matrix Display PCB (USA) 520-5052-15
  - 128 X 32 Dot Matrix CES-LED // EURO ONLY RoHS // 520-5052-15

Playfield Wiring

- General Illumination Circuit Detailed Wiring Diagram
- Playfield Switch Wiring Diagram
- Playfield Lamp Wiring Diagram
- Playfield Terminal Strips, Fuses & Misc. Wiring Descriptions & Locations
- #-Flipper Circuit Wiring Diagram

Cabinet and Coin Door Wiring

- Transformer Power Wiring Diagram
- Cabinet Wiring Diagram
- Coin Door Wiring Diagram
- Cabinet Universal Voltage Jumper Plugs (for use with Universal AC Cable, 036-5530-00 ONLY)

COILS DETAILED CHART TABLE

High Current Coils Group 1		Drive Transistor	Driver Output PCB	Power Line Color	Power Line Connection	Power Voltage	Drive Transistor Control Line Color	D.T. Control Line Connect	Coil GA-Turn or Bulb Type
#1	TROUGH UP-KICKER	Q1	▲ I/O Power Driver ▼	YEL-VIO	J10-P9/10	50VDC	BRN-BLK	J8-P1	26-1200 090-5044-ND
#2	AUTO LAUNCH	Q2		YEL-VIO	J10-P9/10	50VDC	BRN-RED	J8-P3	24-940 090-5036-ND
#3	LOWER LEFT EJECT	Q3		YEL-VIO	J10-P9/10	50VDC	BRN-ORG	J8-P4	23-800 090-5001-ND
#4	MAGNETO MAGNET	Q4		VIO-YEL	J10-P8	50VDC	BRN-YEL	J8-P5	22-600 090-5076-00
#5	LEFT UP KICKER	Q5		YEL-VIO	J10-P9/10	50VDC	BRN-GRN	J8-P6	23-800 090-5001-ND
#6	CENTER LOCKUP UP	Q6		YEL-VIO	J10-P9/10	50VDC	BRN-BLU	J8-P7	26-1200 090-5044-ND
#7	CENTER LOCKUP LATCH	Q7		YEL-VIO	J10-P9/10	50VDC	BRN-VIO	J8-P8	32-1800 515-7695-00
#8	SHAKER MOTOR (OPTIONAL)	Q8		RED-WHT	J17-P7	16VAC	BRN-GRY	J8-P9	502-5027-00

High Current Coils Group 2		Drive Transistor	Driver Output PCB	Power Line Color	Power Line Connection	Power Voltage	Drive Transistor Control Line Color	D.T. Control Line Connect	Coil GA-Turn or Bulb Type
#9	LEFT POP BUMPER	Q9	▲ I/O Power Driver ▼	YEL-VIO	J10-P9/10	50VDC	BLU-BRN	J8-P1	26-1200 090-5044-ND
#10	RIGHT POP BUMPER	Q10		YEL-VIO	J10-P9/10	50VDC	BLU-RED	J8-P2	26-1200 090-5044-ND
#11	BOTTOM POP BUMPER	Q11		YEL-VIO	J10-P9/10	50VDC	BLU-ORG	J8-P4	26-1200 090-5044-ND
#12	UPPER RIGHT FLIPPER	Q12		GRY-YEL 3A	J10-P6/7	50VDC	BLU-YEL	J8-P5	22-1080 090-5032-ND
#13	LEFT SLINGSHOT	Q13		YEL-VIO	J10-P9/10	50VDC	BLU-GRN	J8-P6	26-1200 090-5044-ND
#14	RIGHT SLINGSHOT	Q14		YEL-VIO	J10-P9/10	50VDC	BLU-BLU	J8-P7	26-1200 090-5044-ND
#15	**LEFT FLIPPER (50V RED/YEL)**	Q15		GRY-YEL-3A Fuse-RED-YEL	J10-P6/7	50VDC	ORG-GRY	J8-P8	22-1080 090-5032-ND
#16	**RIGHT FLIPPER (50V RED/YEL)**	Q16		GRY-YEL-3A Fuse-RED-YEL	J10-P6/7	50VDC	ORG-VIO	J8-P9	22-1080 090-5032-ND

Low Current Coils Group 1		Drive Transistor	Driver Output PCB	Power Line Color	Power Line Connection	Power Voltage	Drive Transistor Control Line Color	D.T. Control Line Connect	Coil GA-Turn or Bulb Type
#17	FLASH: LEFT SIDE (X2)	Q17	▲ I/O Power Driver ▼	ORG	J6-P10	20VDC	VIO-BRN	J7-P2	# 89 BULB 165-5000-89
#18	FLASH: RIGHT SIDE	Q18		ORG	J6-P10	20VDC	VIO-RED	J7-P3	# 89 BULB 165-5000-89
#19	FLASH: DISC CLEAR (X2)	Q19		ORG	J6-P10	20VDC	VIO-ORG	J7-P4	# 89 BULB 165-5000-89
#20	FLASH: DISC BLUE (X2)	Q20		ORG	J6-P10	20VDC	VIO-YEL	J7-P6	# 89 BULB 165-5000-89
#21	FLASH: WOLVERINE	Q21		ORG	J6-P10	20VDC	VIO-GRN	J7-P7	# 89 BULB 165-5000-89
#22	FLASH: MAGNETO (LEFT/RIGHT) (X2)	Q22		ORG	J6-P10	20VDC	VIO-BLU	J7-P8	# 89 BULB 165-5000-89
#23	DISC MOTOR POWER	Q23		BRN	J7-P1	20VDC	VIO-BLK	J7-P9	RELAY 190-5004-00
#24	OPTIONAL (e.g. COIN METER)	Q24		RED	J16-P4-8	5VDC	VIO-GRY	J7-P10	COIN METER

Low Current Coils Group 2		Drive Transistor	Driver Output PCB	Power Line Color	Power Line Connection	Power Voltage	Drive Transistor Control Line Color	D.T. Control Line Connect	Coil GA-Turn or Bulb Type
#25	FLASH: POP BUMPER	Q25	▲ I/O Power Driver ▼	ORG	J6-P10	20VDC	BLK-BRN	J6-P1	# 89 BULB 165-5000-89
#26	ORBIT DIVERTER	Q26		BRN	J7-P1	20VDC	BLK-RED	J6-P2	24-940 090-5036-ND
#27	ICEMAN MOTOR	Q27		BRN	J7-P1	20VDC	BLK-ORG	J6-P3	MOTOR 041-5113-00
#28	FLASH: BACKPANEL (LEFT) (X3)	Q28		ORG	J6-P10	20VDC	BLK-YEL	J6-P4	# 89 BULB 165-5000-89
#29	FLASH: BACKPANEL (RIGHT) (X3)	Q29		ORG	J6-P10	20VDC	BLK-GRN	J6-P5	# 89 BULB 165-5000-89
#30	FLASH: MAGNETO SPOT LIGHT	Q30		ORG	J6-P10	20VDC	BLK-BLU	J6-P6	# 161 BULB 165-5032-00
#31	FLASH: BOTTOM ARCH (X2)	Q31		ORG	J6-P10	20VDC	BLK-VIO	J6-P7	# 89 BULB 165-5000-89
#32	FLASH: MAGNETO FIGURE	Q32		ORG	J10-P8	20VDC	BLK-GRY	J6-P8	# 161 BULB 165-5032-00

Y2

Backbox I/O Power Driver Board (Coils Q1-Q32) Detailed Wiring Diagram

Partial View (520-5249-00)

ALL FUSES RATED 250V SLO-BLO
I/O FUSE CHART INFO IN BACKBOX & PAGE DR. 1

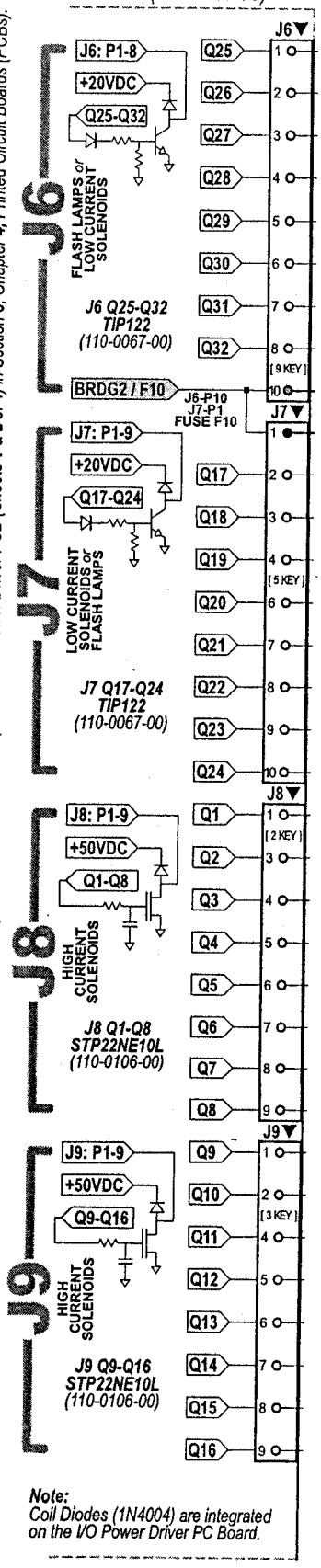

For complete and detailed schematics of the Connectors, Coils, Flash Lamps, Bridges and Fuses noted below, see the I/O Power Driver PCB (Sheets 1 & 2 of 4) in Section 5, Chapter 4, Printed Circuit Boards (PCBs).

Note:
Coil Diodes (1N4004) are integrated on the I/O Power Driver PC Board.

#33 – #35 Note: *If this game is equiped with an optional Ticket Dispenser & Meter, see the end of Sec. 5, Chapter 4 for wiring information. Ensure Std. Adj. 56, Ticket Dispenser = YES.*

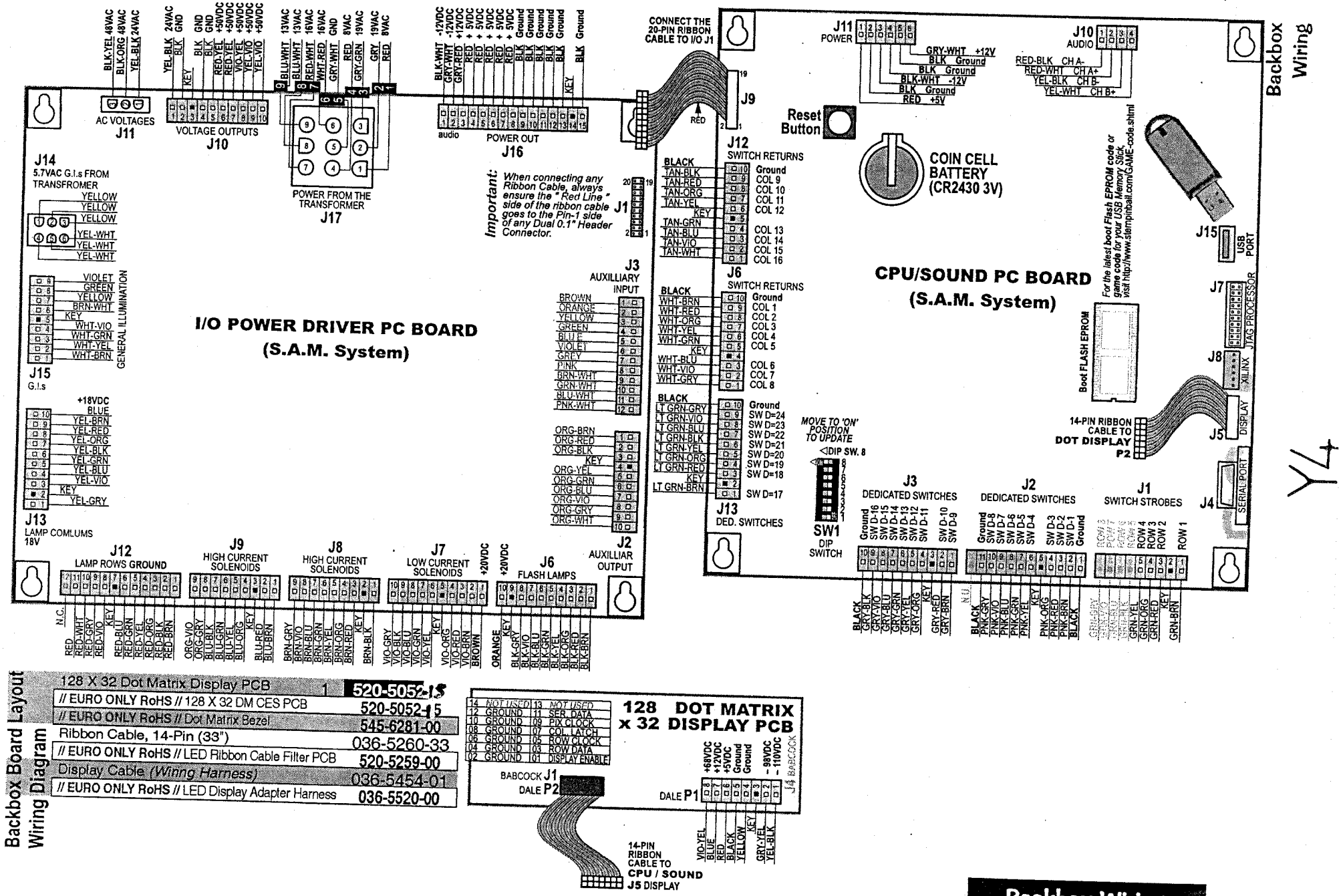
I/O POWER DRIVER PC BOARD
(S.A.M. System)
CPU/SOUND PC BOARD
(S.A.M. System)
Backbox Wiring
AC VOLTAGES J11
VOLTAGE OUTPUTS J10
POWER FROM THE TRANSFORMER J17
POWER OUT J16
audio
CONNECT THE 20-PIN RIBBON CABLE TO I/O J1
Important: When connecting any Ribbon Cable, always ensure the " Red Line " side of the ribbon cable goes to the Pin-1 side of any Dual 0.1" Header Connector.
J14 5.7VAC G.I.s FROM TRANSFROMER
GENERAL ILLUMINATION
J15 G.I.s
J13 LAMP COMLUMS 18V
+18VDC
J3 AUXILLIARY INPUT
J2 AUXILLIAR OUTPUT
J12 LAMP ROWS GROUND
J9 HIGH CURRENT SOLENOIDS
J8 HIGH CURRENT SOLENOIDS
J7 LOW CURRENT SOLENOIDS
+20VDC
+20VDC
J6 FLASH LAMPS
J11 POWER
J10 AUDIO
Reset Button
COIN CELL BATTERY (CR2430 3V)
J12 SWITCH RETURNS
J6 SWITCH RETURNS
J13 DED. SWITCHES
MOVE TO 'ON' POSITION TO UPDATE
DIP SW. 8
SW1 DIP SWITCH
J3 DEDICATED SWITCHES
J2 DEDICATED SWITCHES
J1 SWITCH STROBES
J15 USB PORT
J7 JTAG PROCESSOR
Boot FLASH EPROM
J8 XILINX
J4 SERIAL PORT
J5 DISPLAY
14-PIN RIBBON CABLE TO DOT DISPLAY P2
For the latest boot Flash EPROM code or game code for your USB Memory Stick, visit http://www.stempinball.com/GAME-code.shtml
Y4
Backbox Board Layout Wiring Diagram
128 X 32 Dot Matrix Display PCB 1 520-5052-15
// EURO ONLY RoHS // 128 X 32 DM CES PCB 520-5052-15
// EURO ONLY RoHS // Dot Matrix Bezel 545-6281-00
Ribbon Cable, 14-Pin (33") 036-5260-33
// EURO ONLY RoHS // LED Ribbon Cable Filter PCB 520-5259-00
Display Cable (Wiring Harness) 036-5454-01
// EURO ONLY RoHS // LED Display Adapter Harness 036-5520-00
128 DOT MATRIX x 32 DISPLAY PCB
BABCOCK J1
DALE P2
DALE P1
14-PIN RIBBON CABLE TO CPU / SOUND J5 DISPLAY
Backbox Wiring

X-MEN PREMIUM

Wiring for the 8-Transistor driver board, 520-5325-00

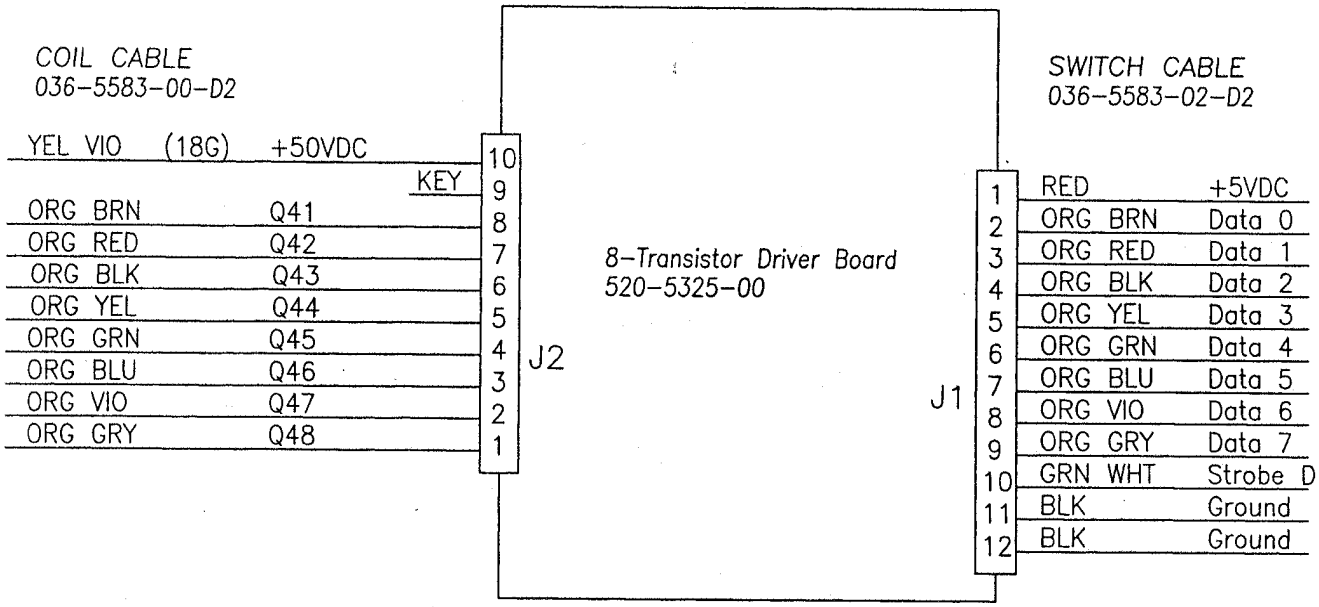

Actual Board Layout

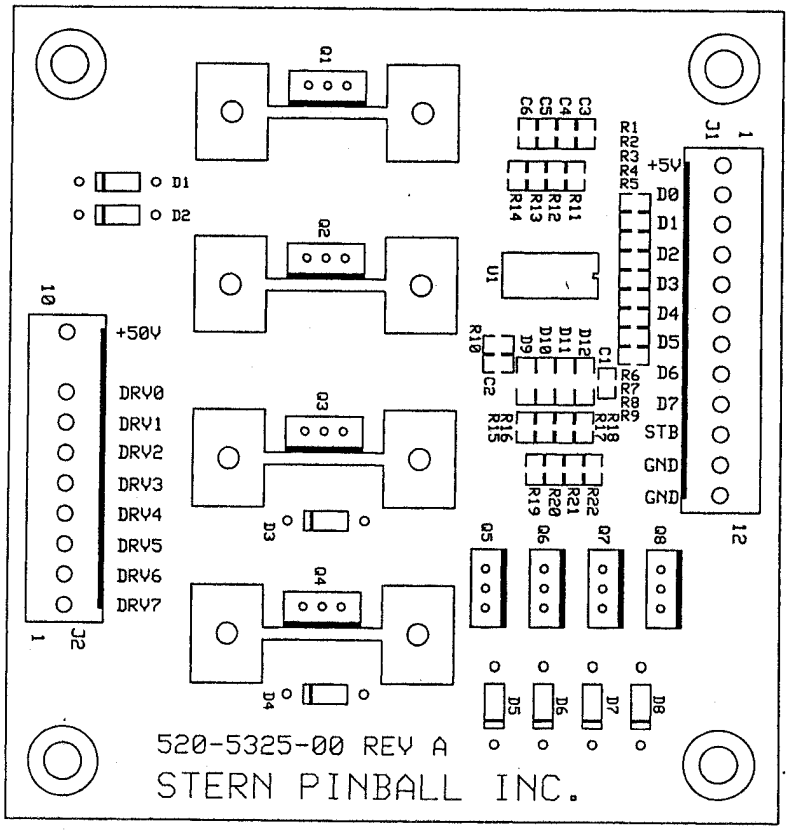

Y5

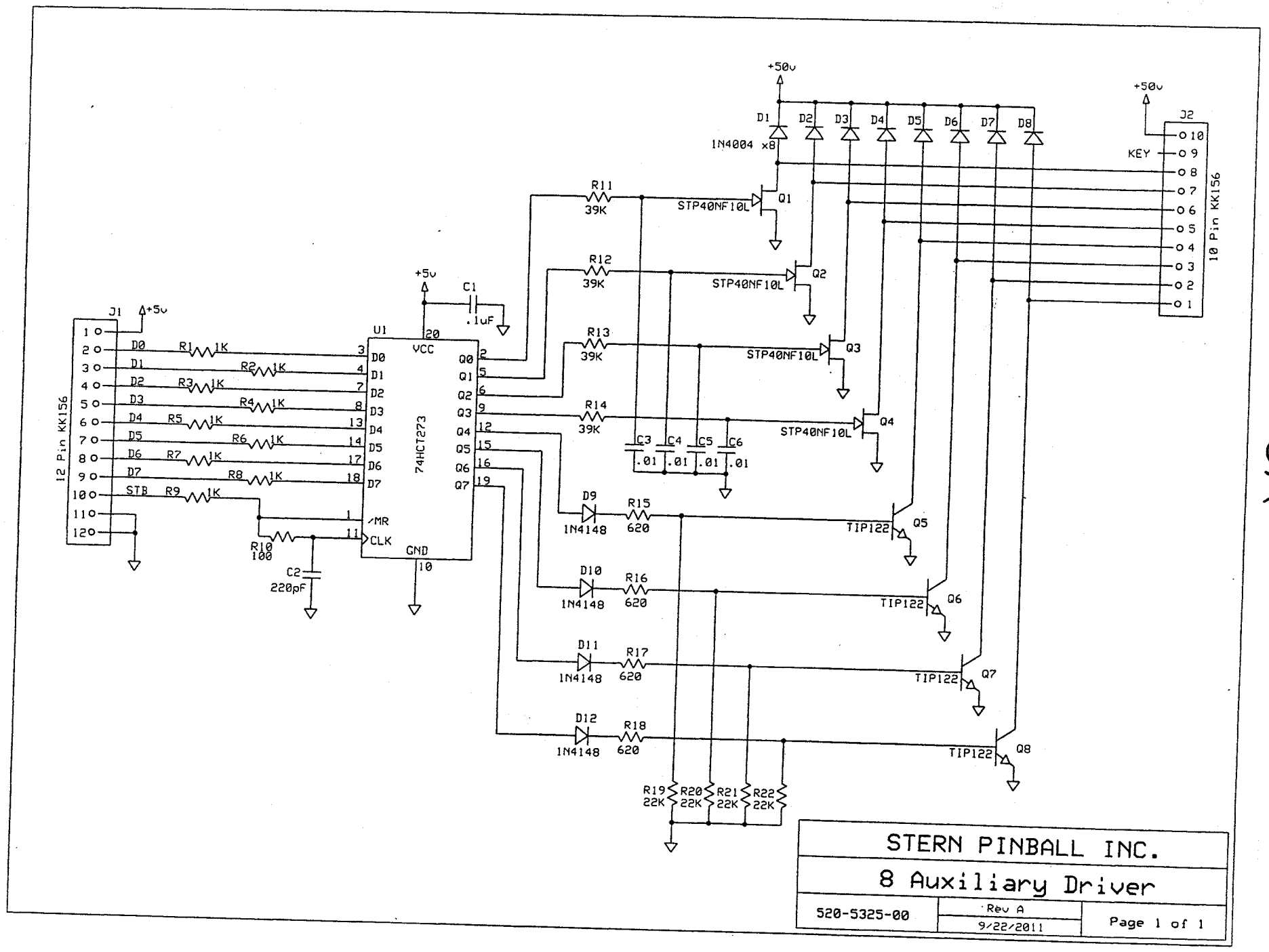

STERN PINBALL INC.		
8 Auxiliary Driver		
520-5325-00	Rev A 9/22/2011	Page 1 of 1

X-MEN L.imited Edition

LED Board Wiring

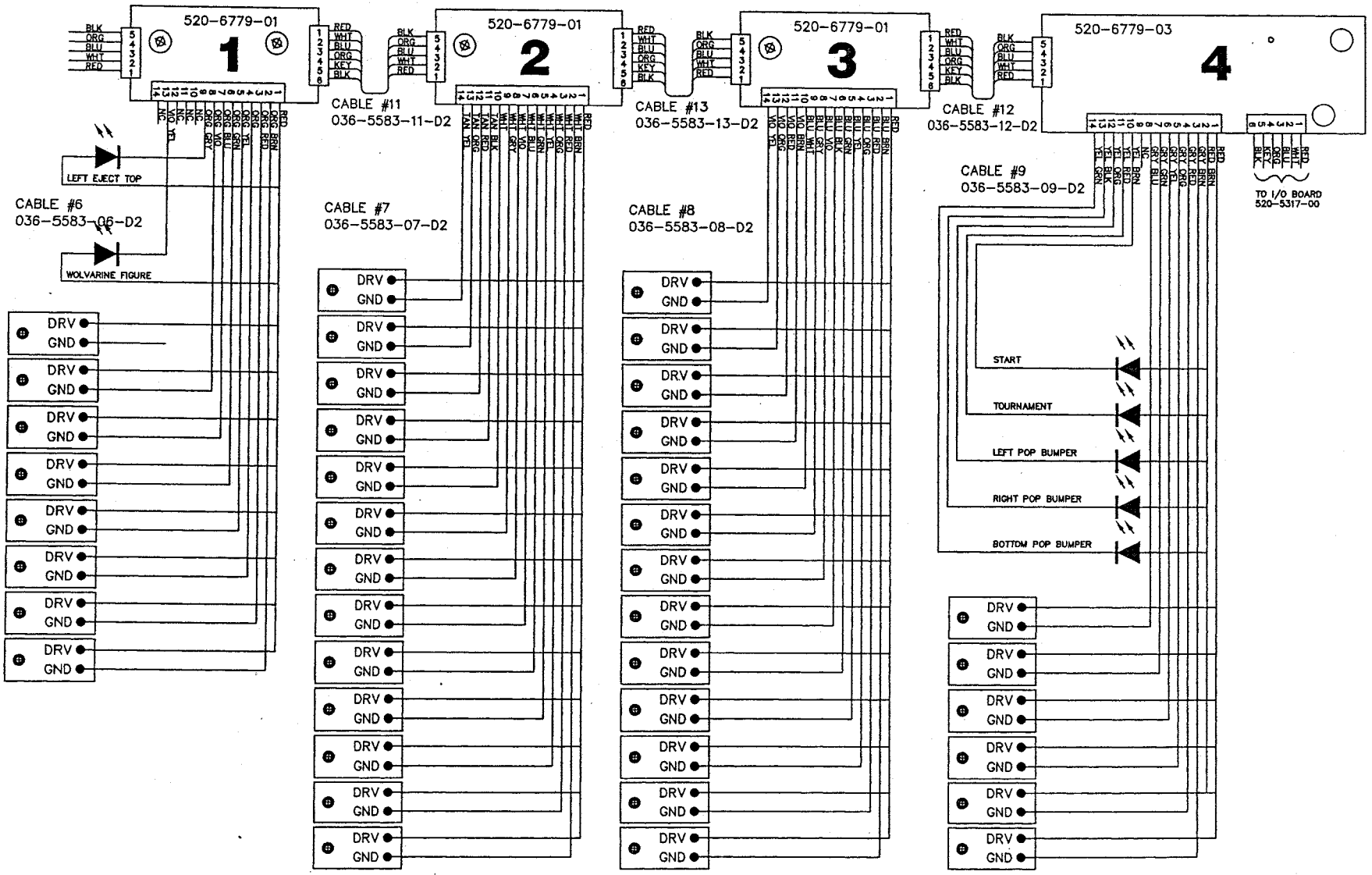

X-MEN L.imited Edition
LED WIRING

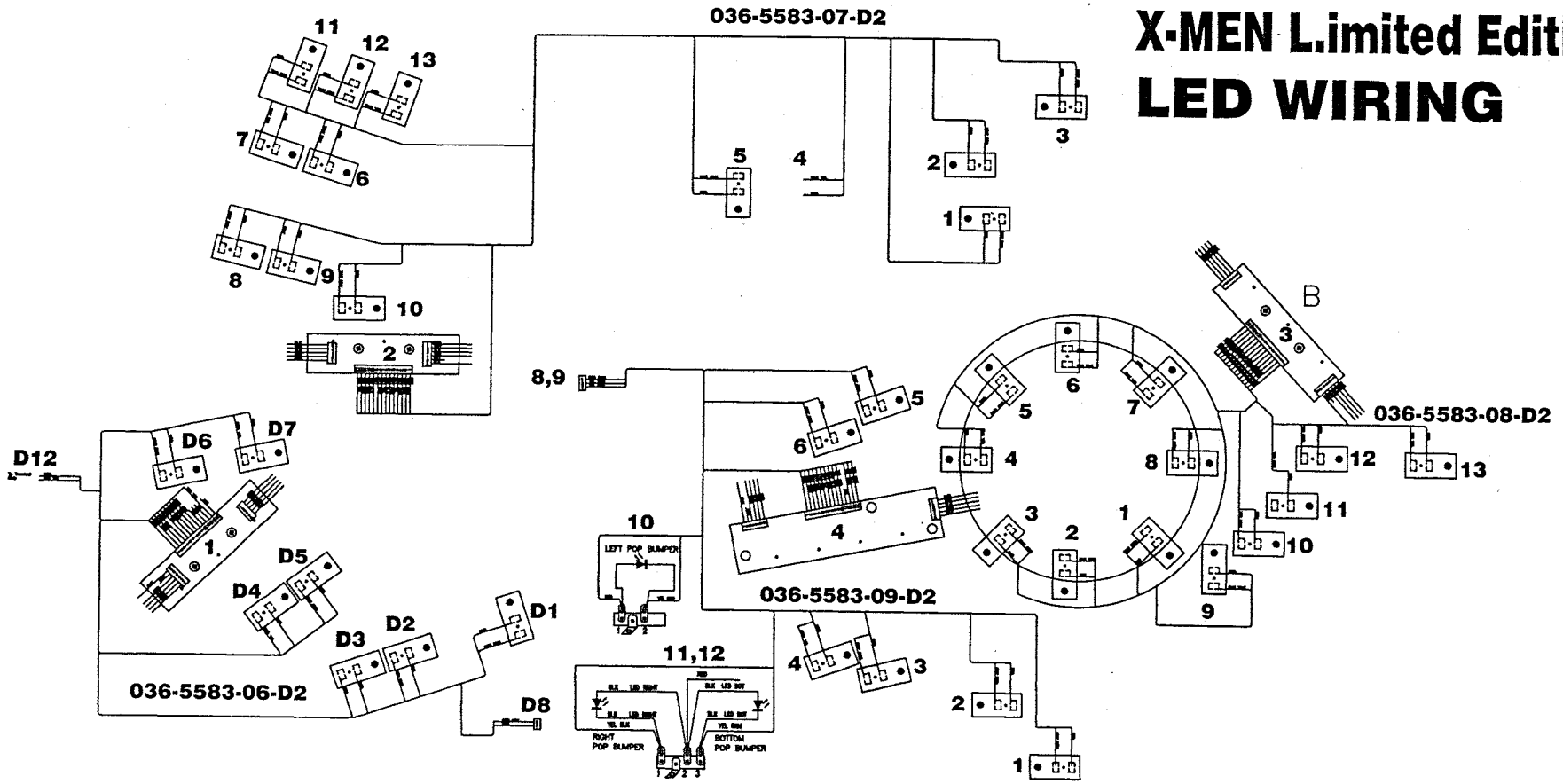

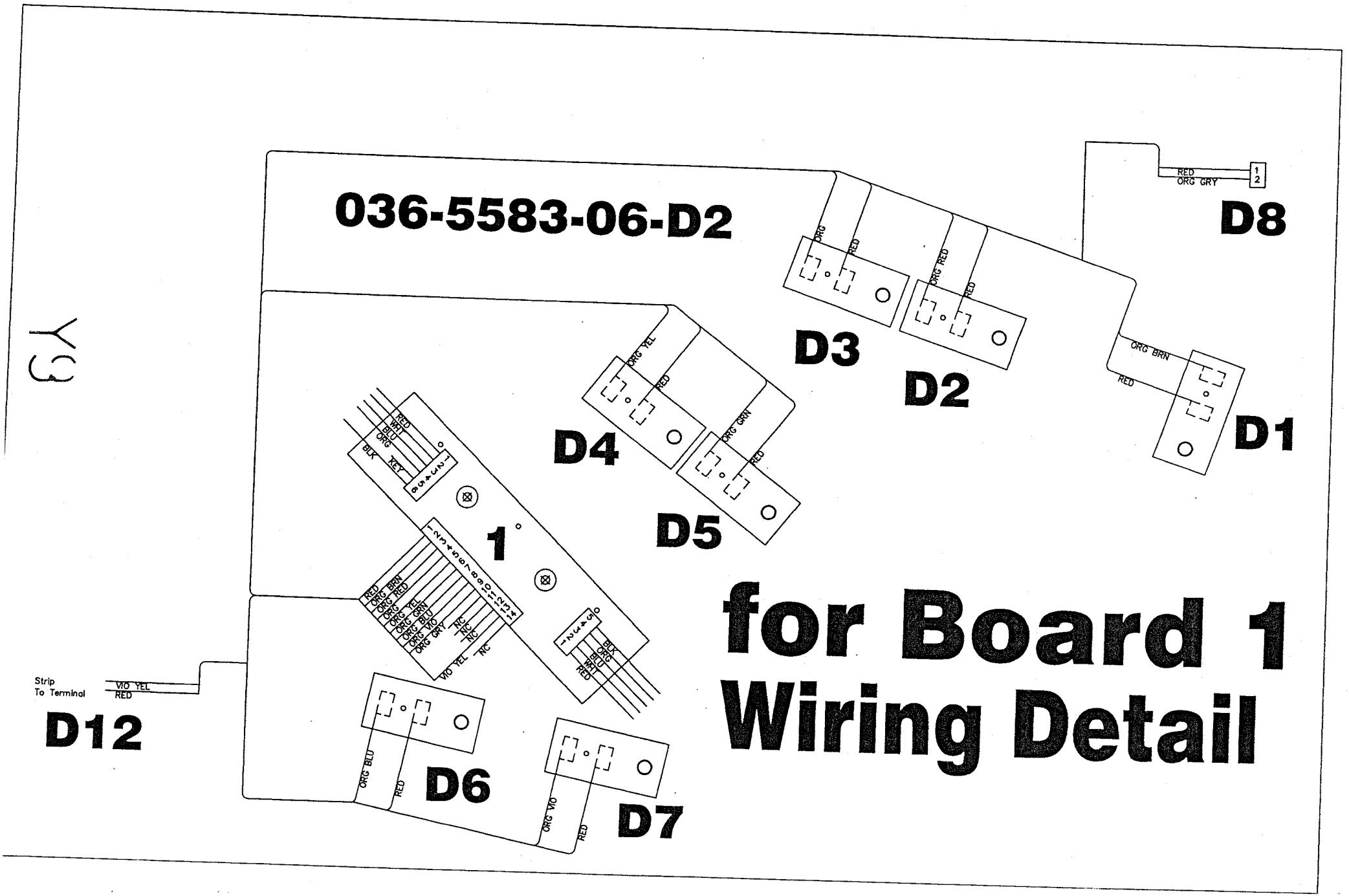
036-5583-06-D2
Y3
D1
D2
D3
D4
D5
D6
D7
D8
D12
1
Strip
To Terminal
VIO YEL
RED
for Board 1
Wiring Detail

Y10

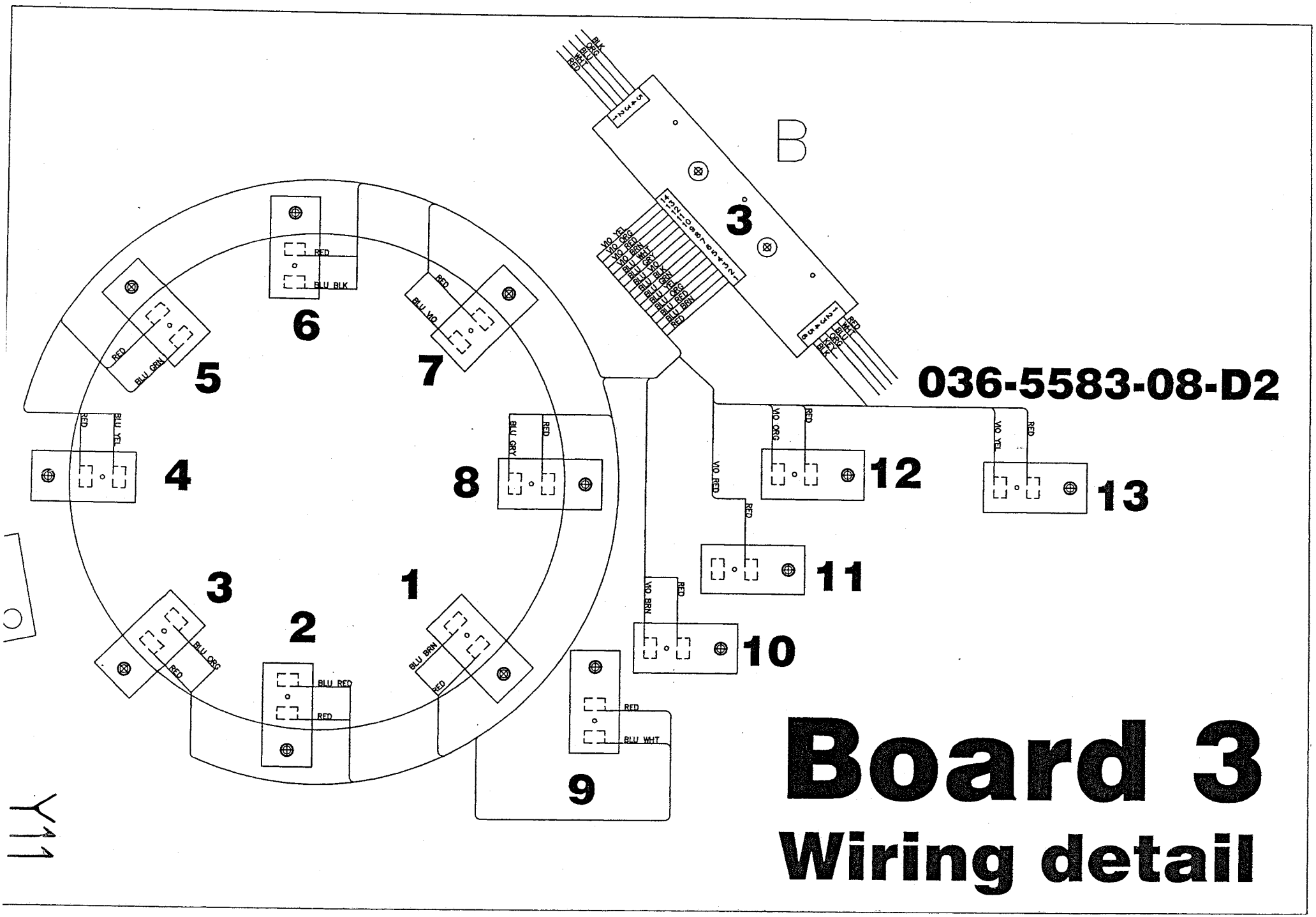
036-5583-08-D2
Board 3
Wiring detail
B
1
2
3
4
5
6
7
8
9
10
11
12
13
RED
BLU BLK
BLU VIO
BLU GRY
BLU YEL
BLU GRN
BLU ORG
BLU RED
BLU BRN
BLU WHT
VIO ORG
VIO YEL
VIO RED
VIO BRN
Y11

Board 4 Wiring

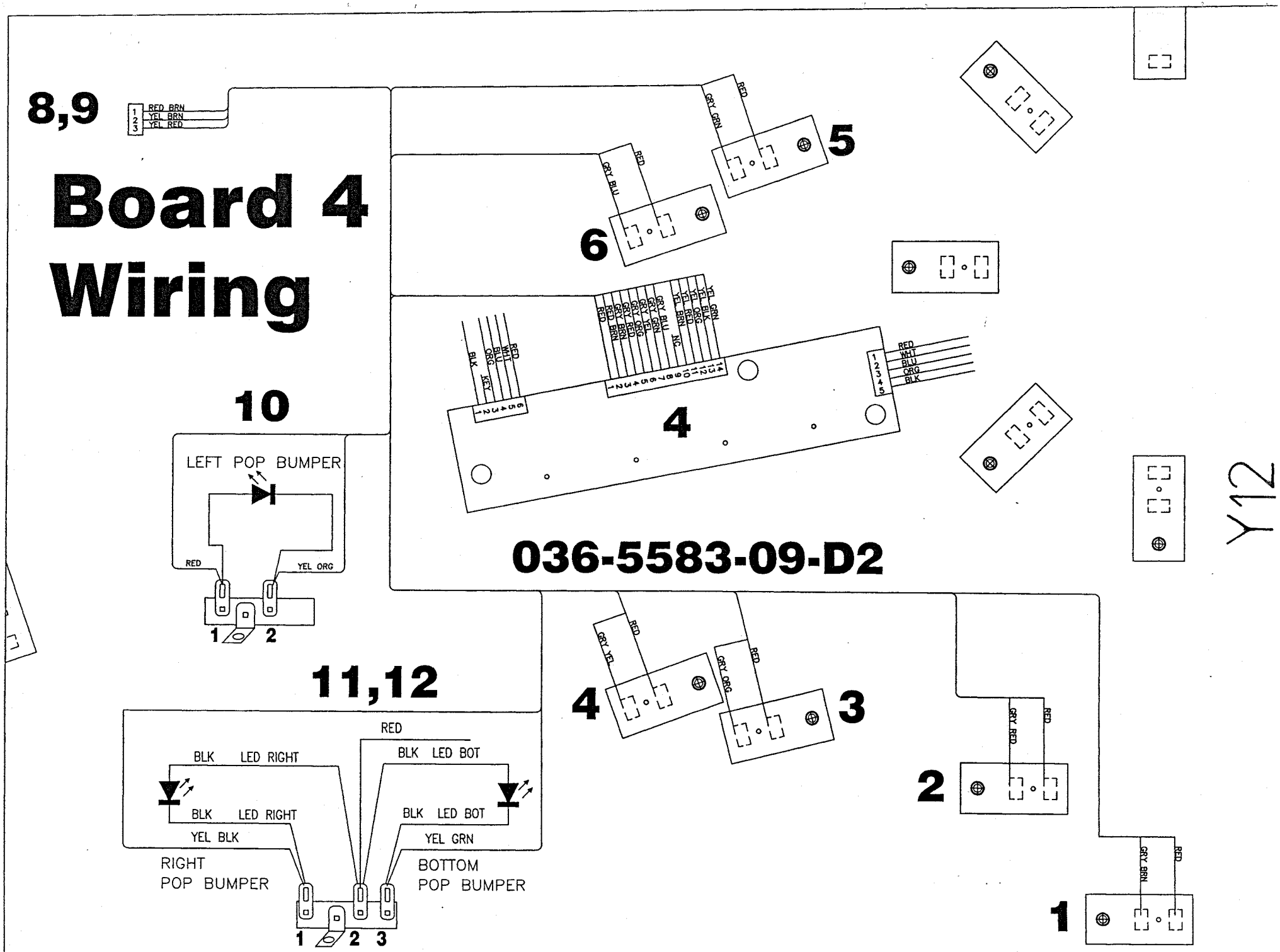

X-MEN L.E.
RED GI MAP

RED LEDS

June 7, 2012

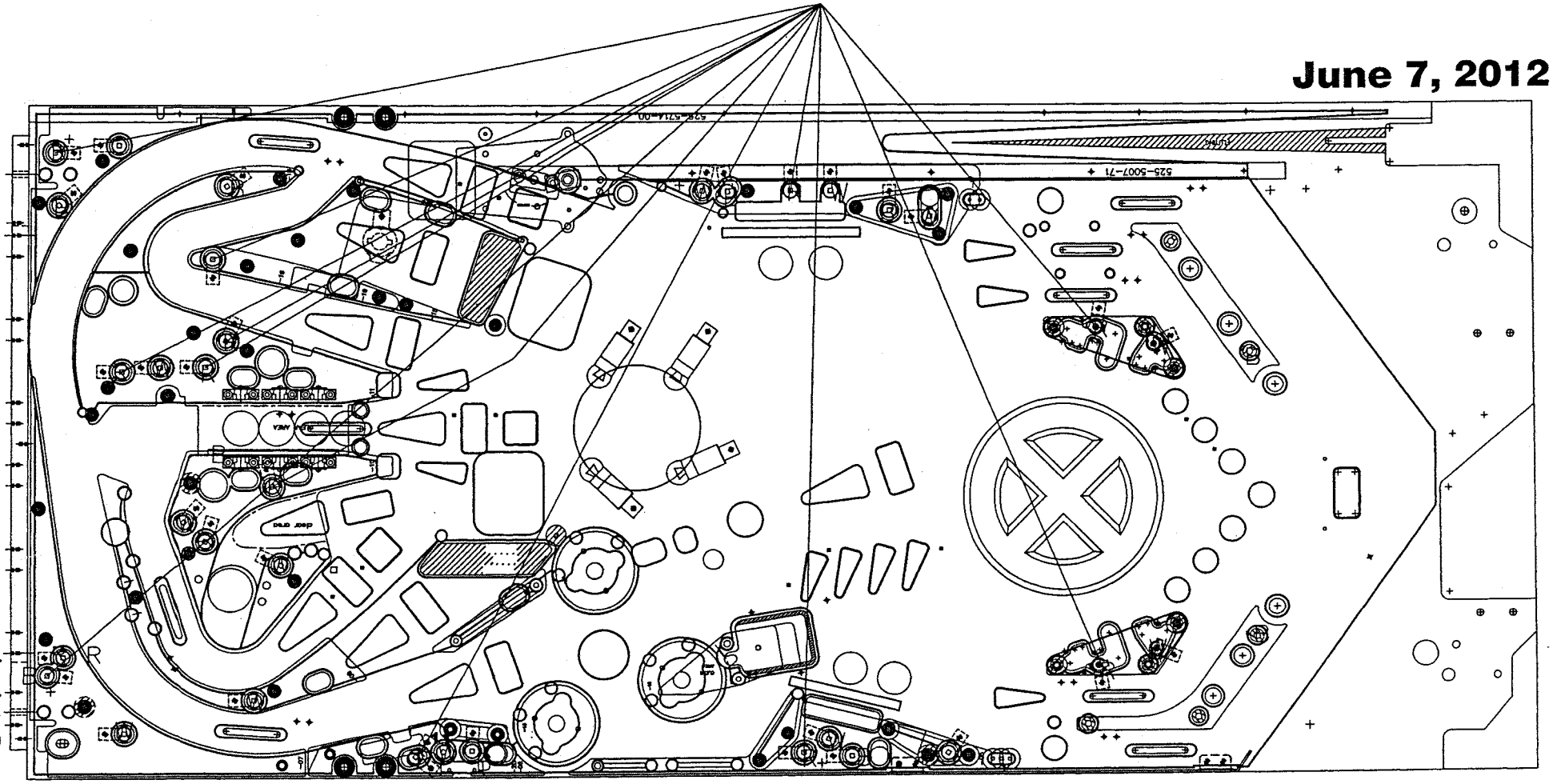

Y14

X-MEN L.E.
WHT GI MAP

WHT LEDS

June 7, 2012

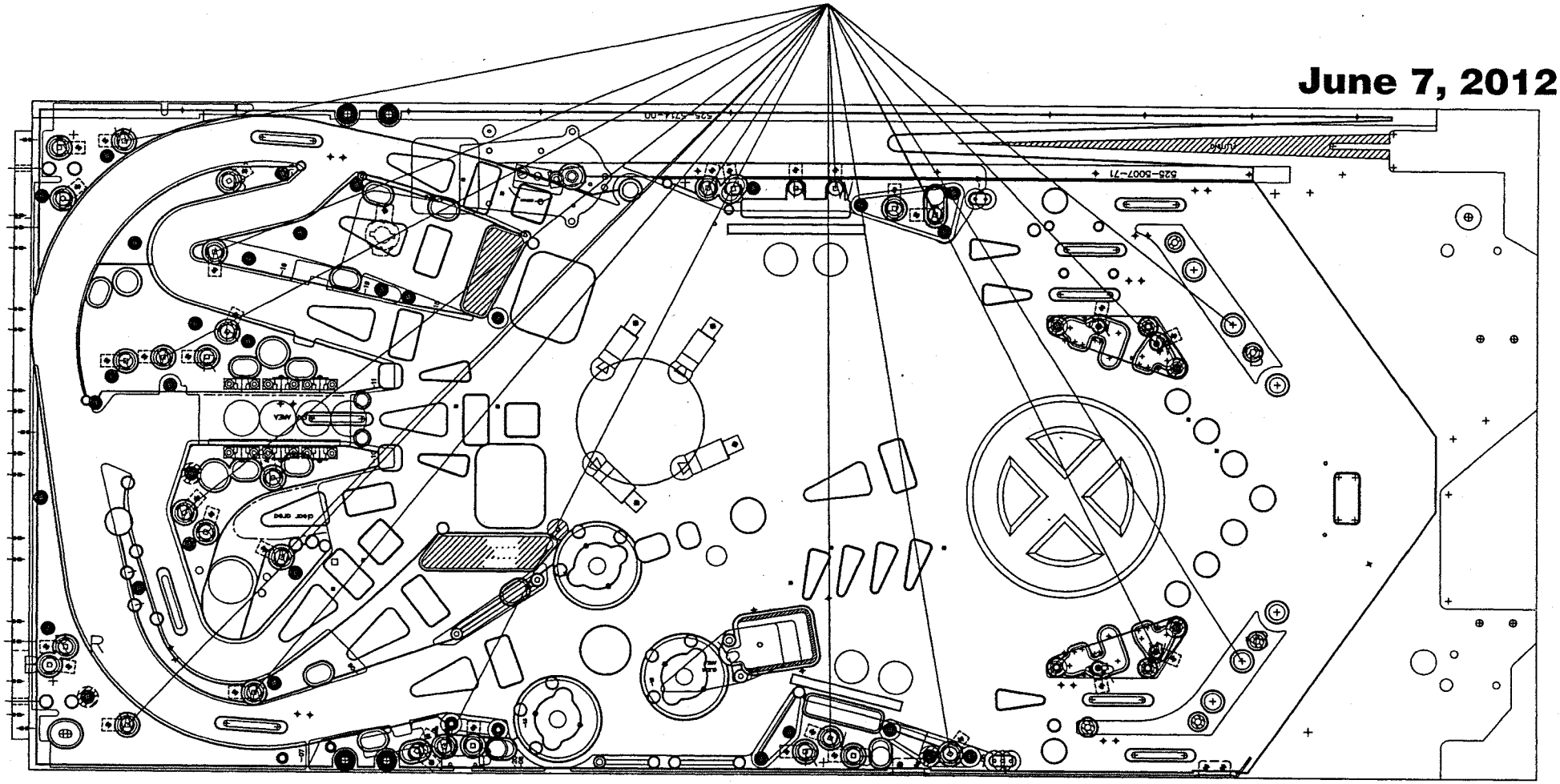

X-MEN L.E.
BLU GI MAP

BLU LEDS

June 7, 2012

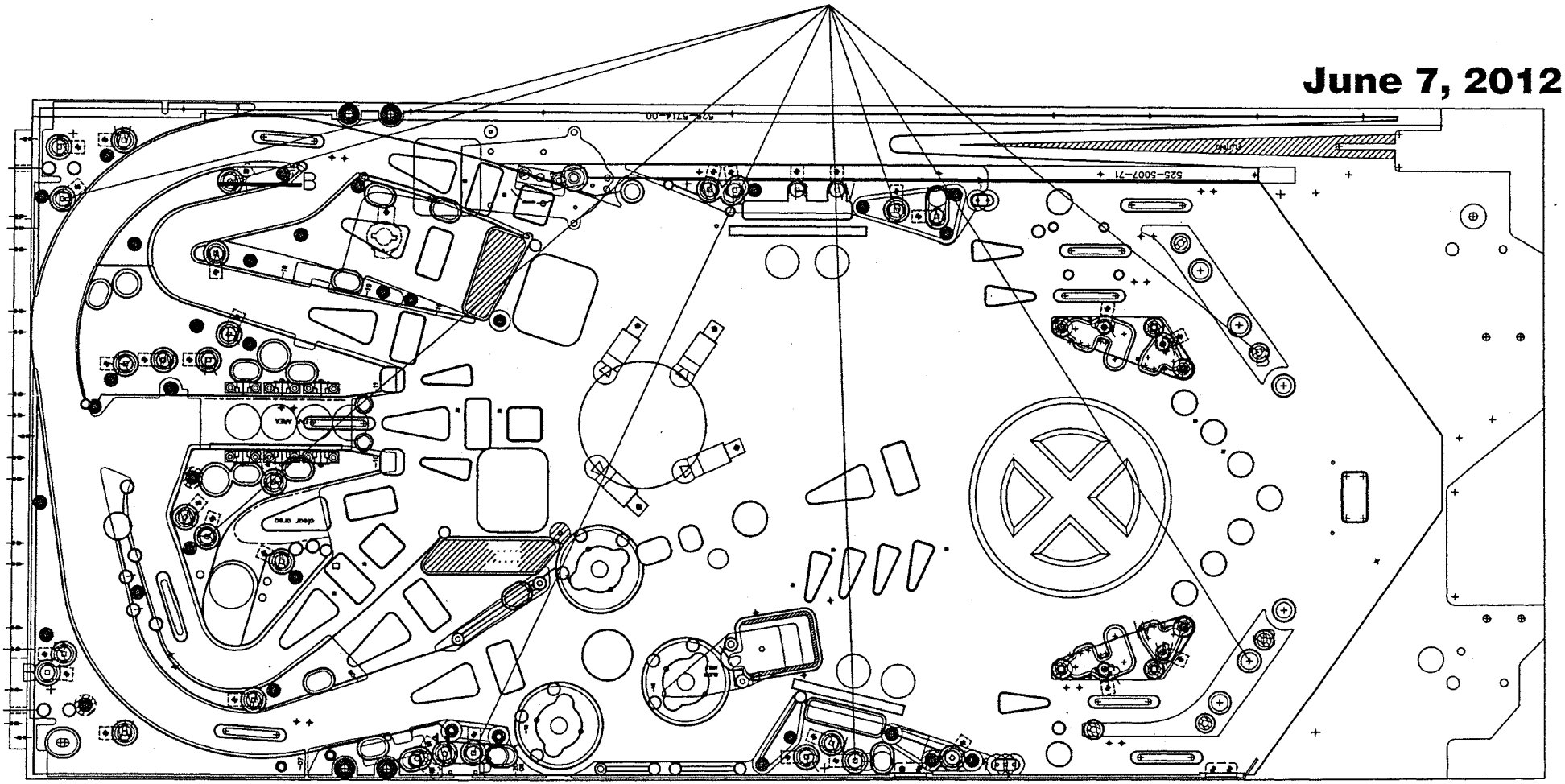

ENGLISH

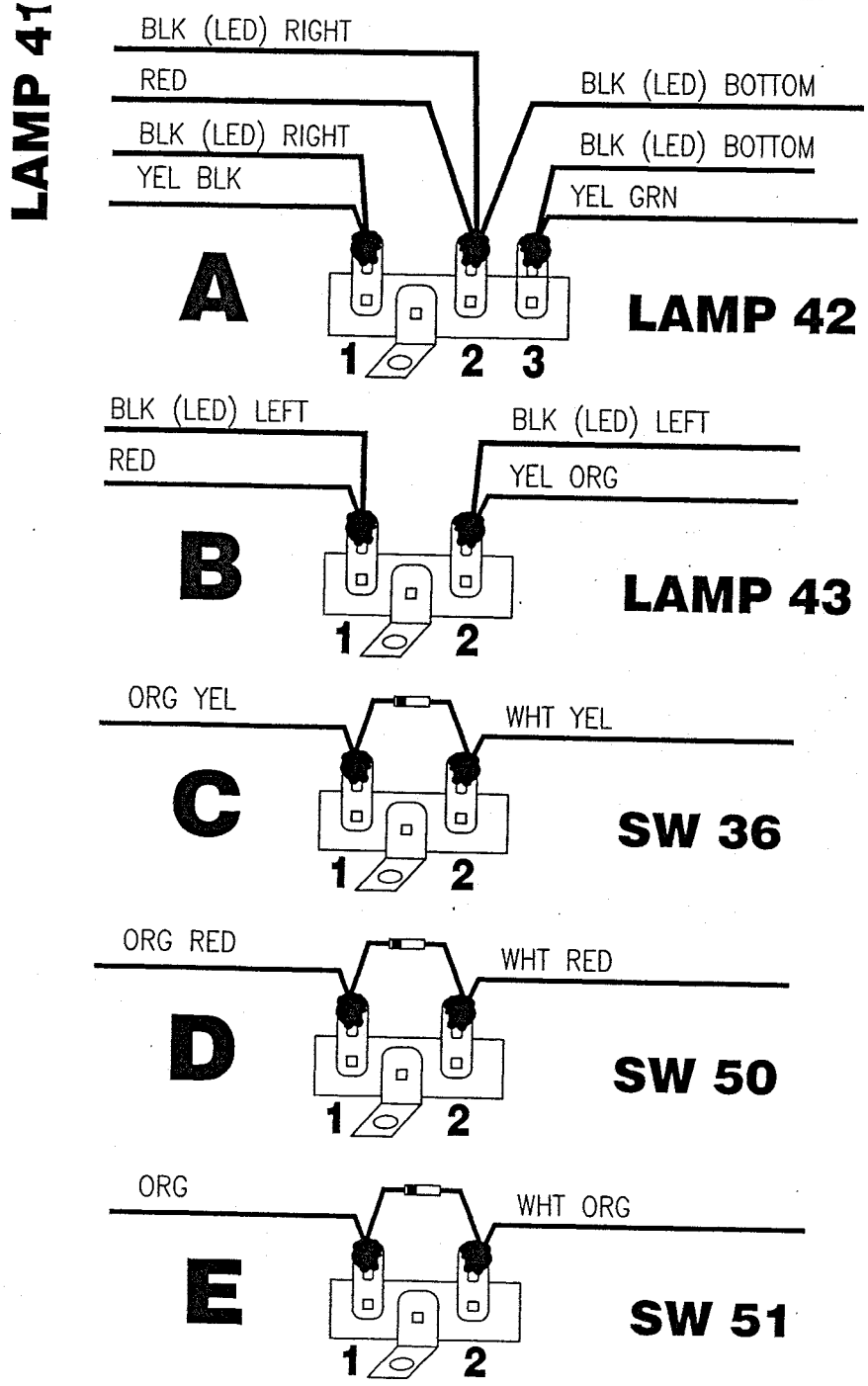

DWN. Sheridan	DATE 04-16-12		TITLE DTS Confirguration - X-MEN L.E.
1st USE X-Men PRO	SCALE 1:1	REV -	
Stern Pinball, Inc 2020 JANICE AVE., MELROSE PARK, IL. 60160			PART NO. DTS-MAP

Y16

RELAY ASSEMBLY
X-MEN Limited Edition

Rev	Description	Eng	Date
A	Released	Sheridan	05-24-12

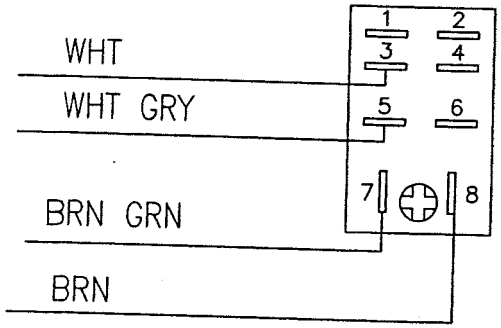

036-5530-09-B1
CABLE

190-5004-00
RELAY

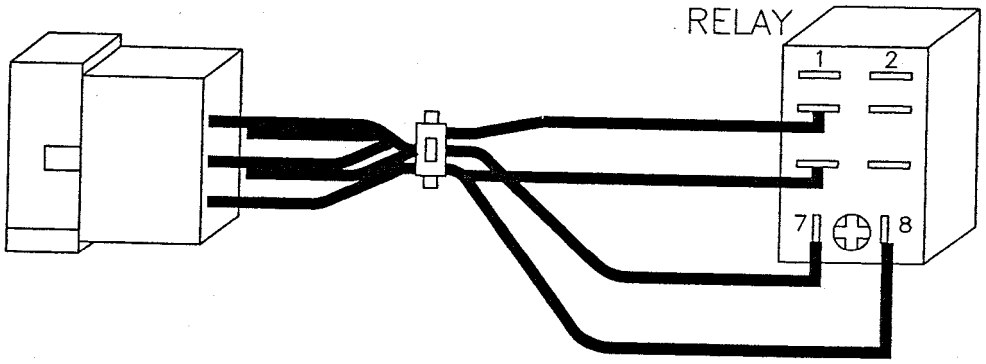

Relay Cable 036-5539-09-B1

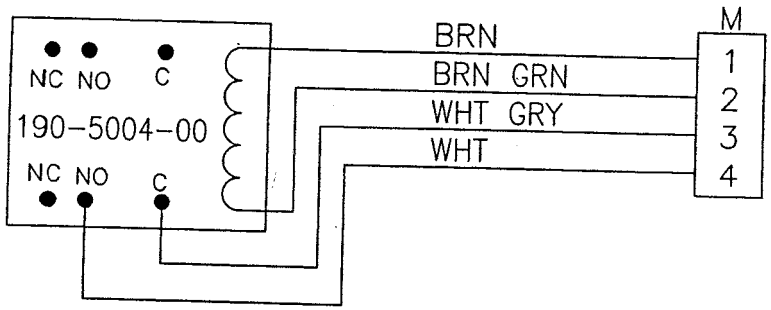

511-5249-01

Item	Part Number	Description	Qty
1	190-5004-00	Packard Relay	1
2	036-5539-09-B1	Relay Cable	1

DWN. Sheridan	DATE 05-24-12	TITLE Relay and Cable Assembly
1st USE AVATAR	SCALE N/S	

Stern Pinball, Inc
2220 JANICE AVE., MELROSE PARK, IL. 60160

PART NO. 511-5249-01

511-5249-01

GENERIC RELAY ASSEMBLY
DC MOTOR WITH BRAKING

Rev	Description	Eng	Date
A	Released	Sheridan	05-11-12

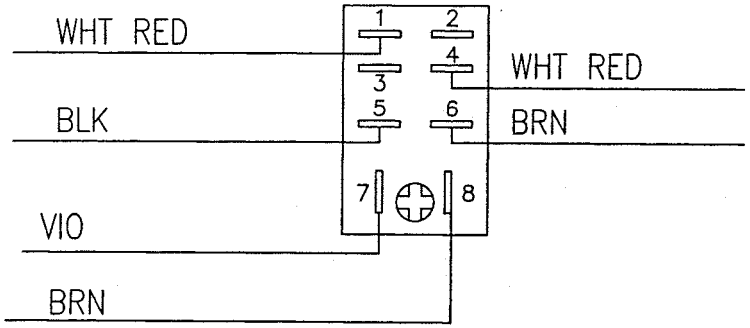

036-5589-00
CABLE

190-5004-00
RELAY

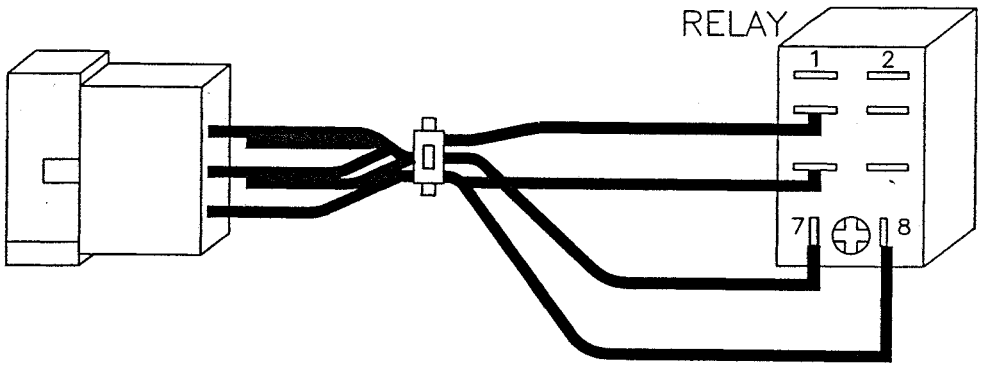

Relay Cable 036-5589-00

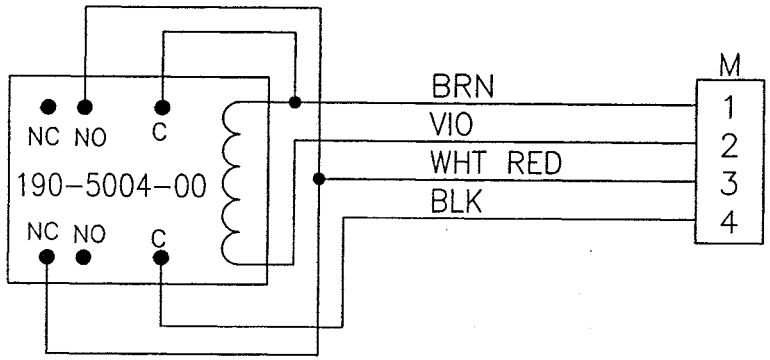

Y152

Item	Part Number	Description	Qty
1	190-5004-00	Packard Relay	1
2	036-5589-00	Relay Cable	1

DWN. Sheridan	DATE 05-11-12	TITLE Relay and Cable Assembly
1st USE X-MEN L.E.	N/S	

Stern Pinball, Inc
2220 JANICE AVE., MELROSE PARK, IL. 60160

PART NO. 511-7234-00

511-7234-00

RELAY ASSEMBLY X-MEN L.E.

(X3)

Rev	Description	Eng	Date
A	Released	Sheridan	04-12-12

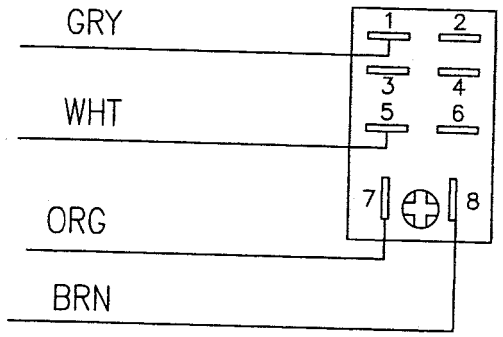

Relay Cable 036-5583-05-D2

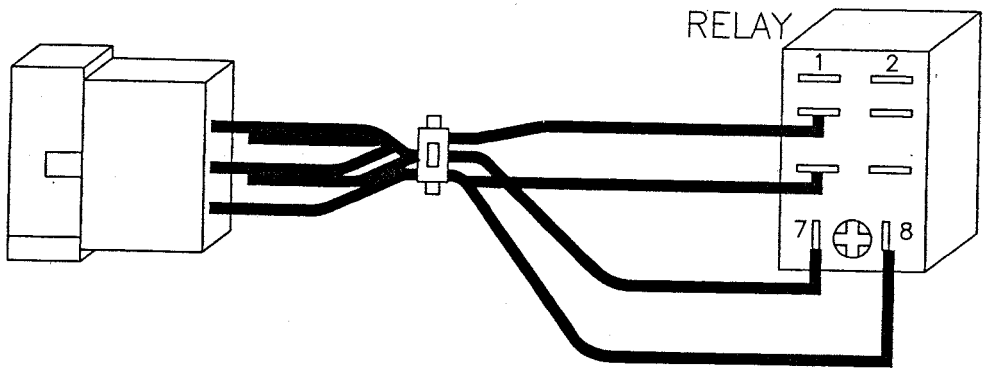

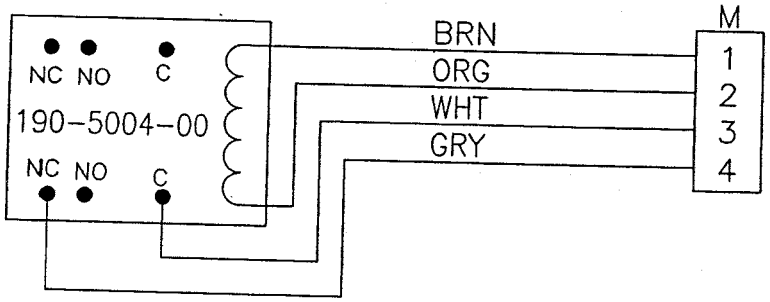

Item	Part Number	Description	Qty
1	190-5004-00	Packard Relay	1
2	036-5583-05-D2	Relay Cable	1

DWN. Sheridan	DATE 04-12-12	TITLE Relay and Cable Assembly
1st USE X-MEN L.E.	N/S	

Stern Pinball, Inc
2220 JANICE AVE., MELROSE PARK, IL. 60160

PART NO. 511-7226-00

511-7226-00

Playfield Switch Wiring Diagram

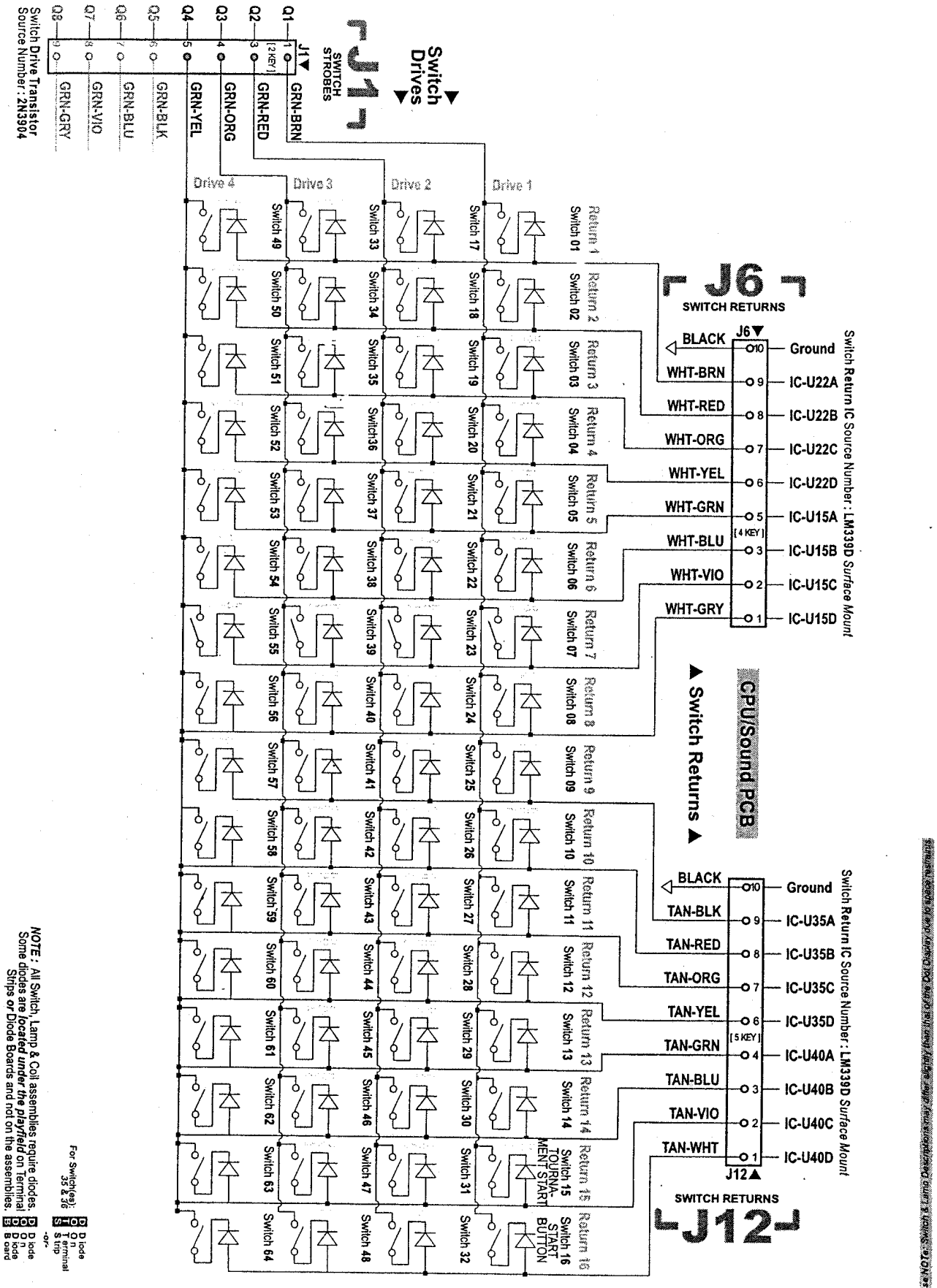

NOTE: All Switch, Lamp & Coil assemblies require diodes. Some diodes are *located under the playfield* on Terminal Strips **or** Diode Boards and not on the assemblies.

Please NOTE: Some Switches require Diodes, but are not shown on the Wiring Diagram

Playfield Wiring

#-Flipper Circuit Wiring Diagram

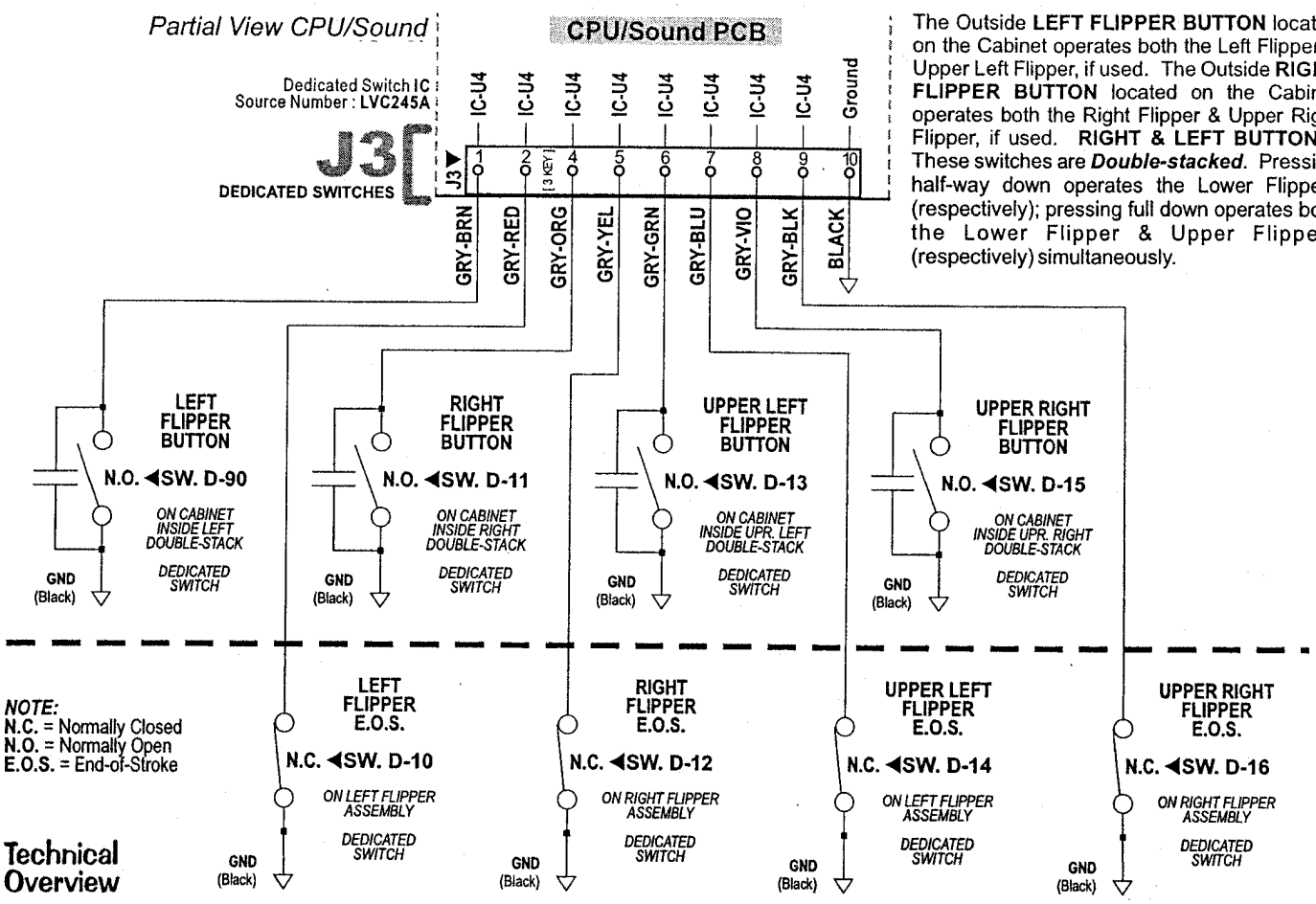

The Outside **LEFT FLIPPER BUTTON** located on the Cabinet operates both the Left Flipper & Upper Left Flipper, if used. The Outside **RIGHT FLIPPER BUTTON** located on the Cabinet operates both the Right Flipper & Upper Right Flipper, if used. **RIGHT & LEFT BUTTONS:** These switches are ***Double-stacked.*** Pressing half-way down operates the Lower Flippers (respectively); pressing full down operates both the Lower Flipper & Upper Flippers (respectively) simultaneously.

Technical Overview

Our ***Flipper System*** uses one supply voltage (+50VDC) for both ***kick*** & ***hold***. Once the **Game CPU** detects a Flipper Cabinet Switch closure *(during game play)* it applies a 40*msec* pulse to the gate of the Flipper Drive Transistor (STP22NE10L). If it continues to detect a Flipper Cabinet Switch closure *(the player holding the button in)* it will continue to pulse the flipper drive transistor 1*msec* every 12*msecs* for the duration of the hold cycle.

The **E.O.S.** (End-Of-Stroke) **Switch** serves the same function as before as it prevents foldback when the player has the flipper energized to capture balls. The **E.O.S. Dedicated Switch** is a normally closed switch which opens approximately 1/16" when the flipper is energized. The **Game CPU** will detect a switch closure if the flipper bat is forced back by a high velocity shot or rebound on the playfield and will apply another 40*msec* pulse of 50VDC to the coil.

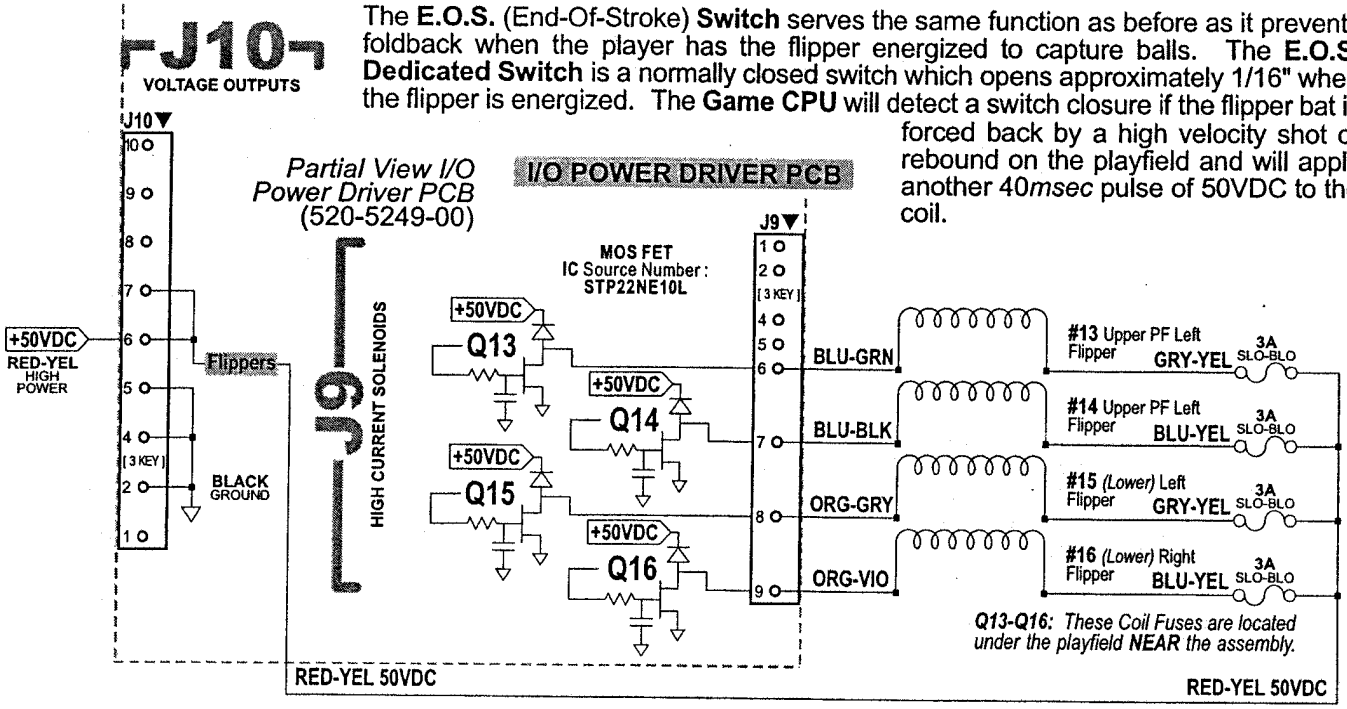

Typical Under-Playfield Fuses are rated:
3A 250v Slo-Blo
Do Not Over-Fuse

NOTe:
Coil Diodes (1N4004) are integrated on the I/O Power Driver PCB. See Coils Detailed Wiring Diagram for actual number of flippers used on this game.

Transformer Power Wiring Diagram

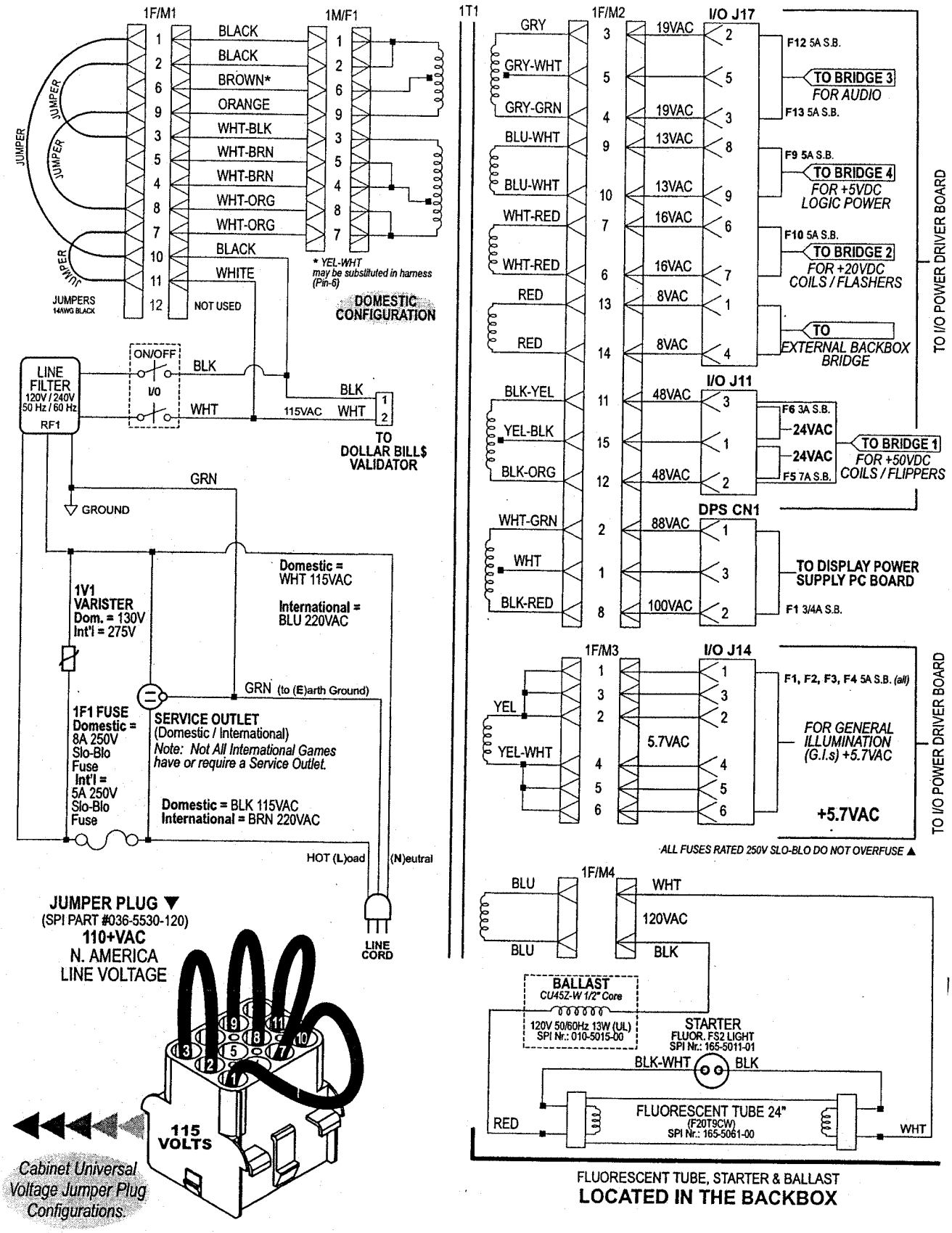

Cabinet and Coin Door Wiring

Cabinet Wiring Diagram

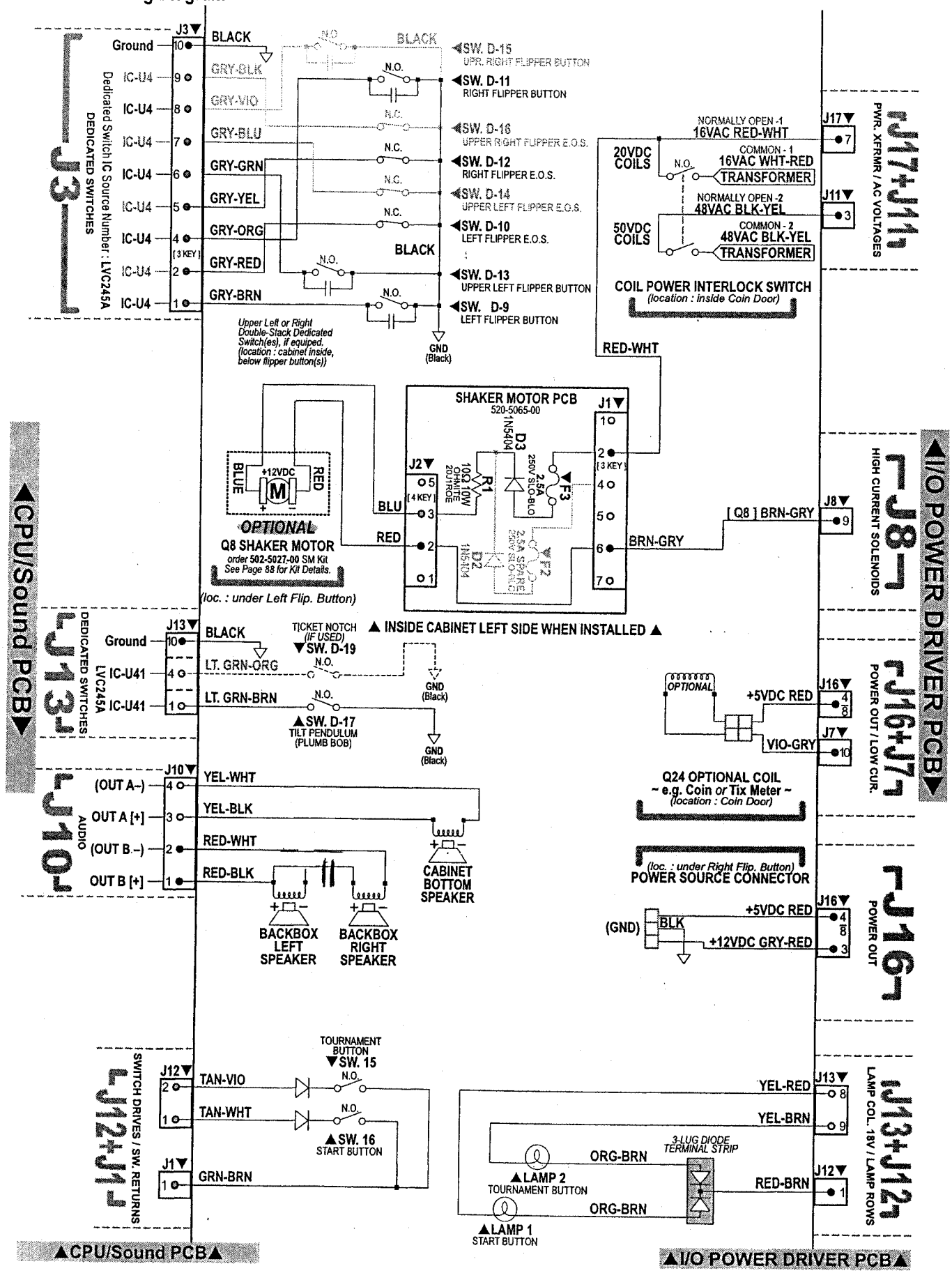

Cabinet and Coin Door Wiring

Coin Door Wiring Diagram

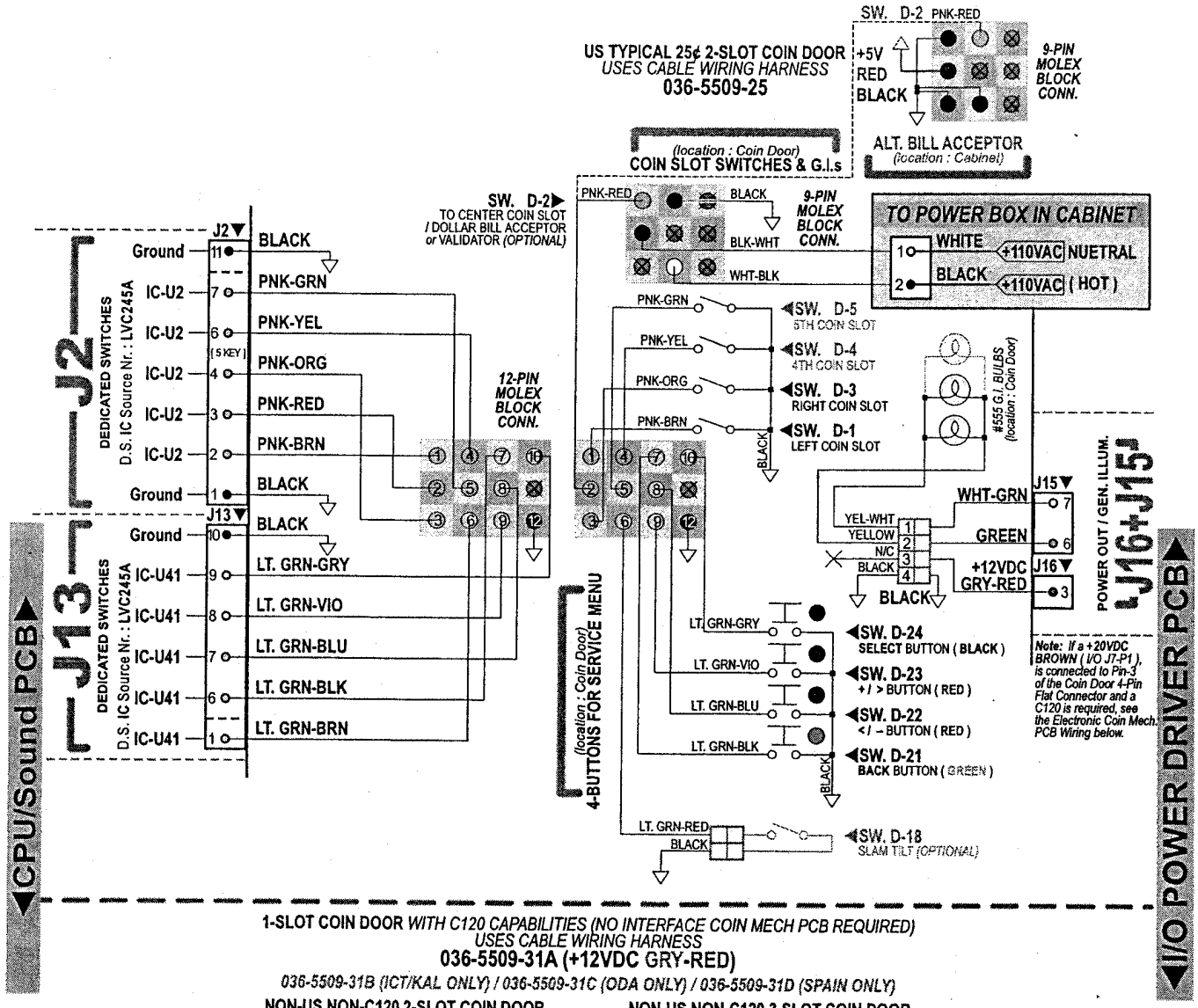

1-SLOT COIN DOOR *WITH C120 CAPABILITIES (NO INTERFACE COIN MECH PCB REQUIRED)*
USES CABLE WIRING HARNESS
036-5509-31A (+12VDC GRY-RED)

036-5509-31B (ICT/KAL ONLY) / 036-5509-31C (ODA ONLY) / 036-5509-31D (SPAIN ONLY)

NON-US NON-C120 2-SLOT COIN DOOR
USES CABLE WIRING HARNESS
036-5509-32

NON-US NON-C120 3-SLOT COIN DOOR
USES CABLE WIRING HARNESS
036-5509-33

IF YOUR GAME HAS AN ELECTRONIC COIN MECH. INTERFACE PC BOARD (520-5193-00):

1-SLOT COIN DOOR *USE WITH C120 CAPABILITIES REQUIRING PCB 520-5193-00*
USES CABLE WIRING HARNESS
036-5509-31 (S.A.M. SYSTEM)

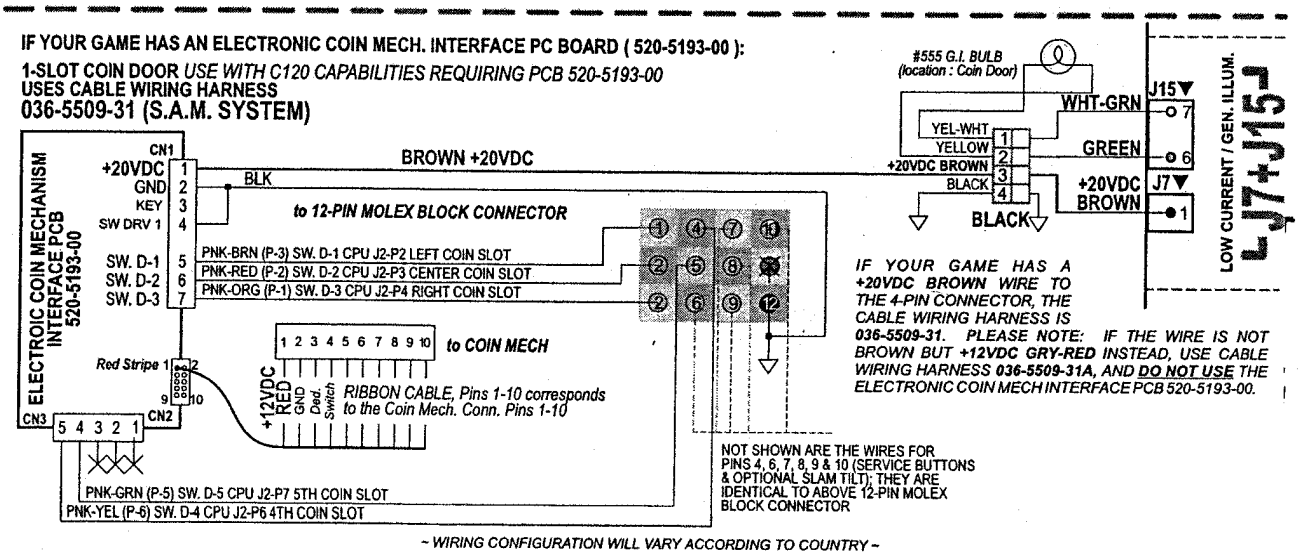

~ WIRING CONFIGURATION WILL VARY ACCORDING TO COUNTRY ~

Cabinet and Coin Door Wiring

Cabinet Universal Voltage Jumper Plugs *(for use with Universal AC Cable, 036-5530-00 ONLY)*

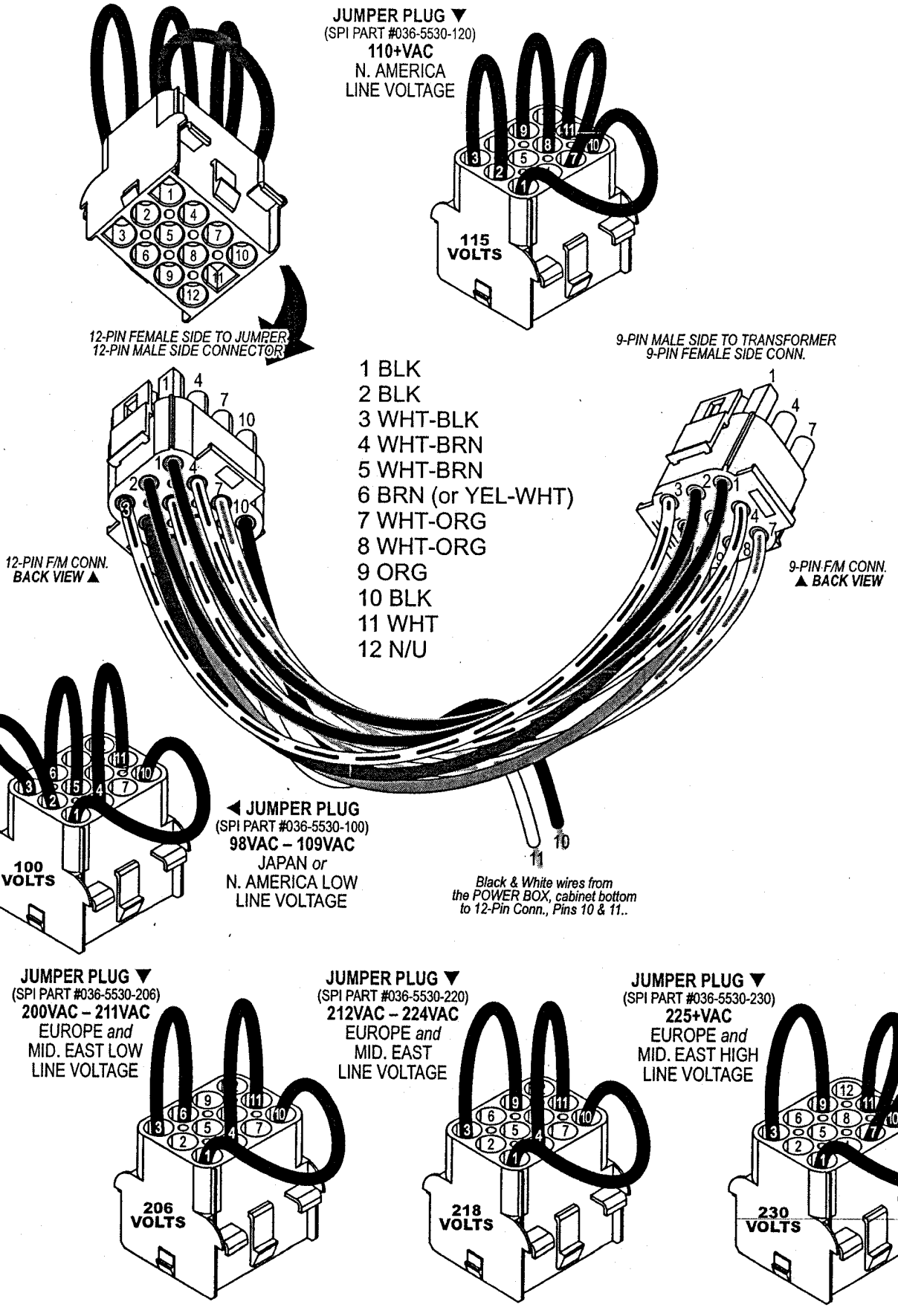

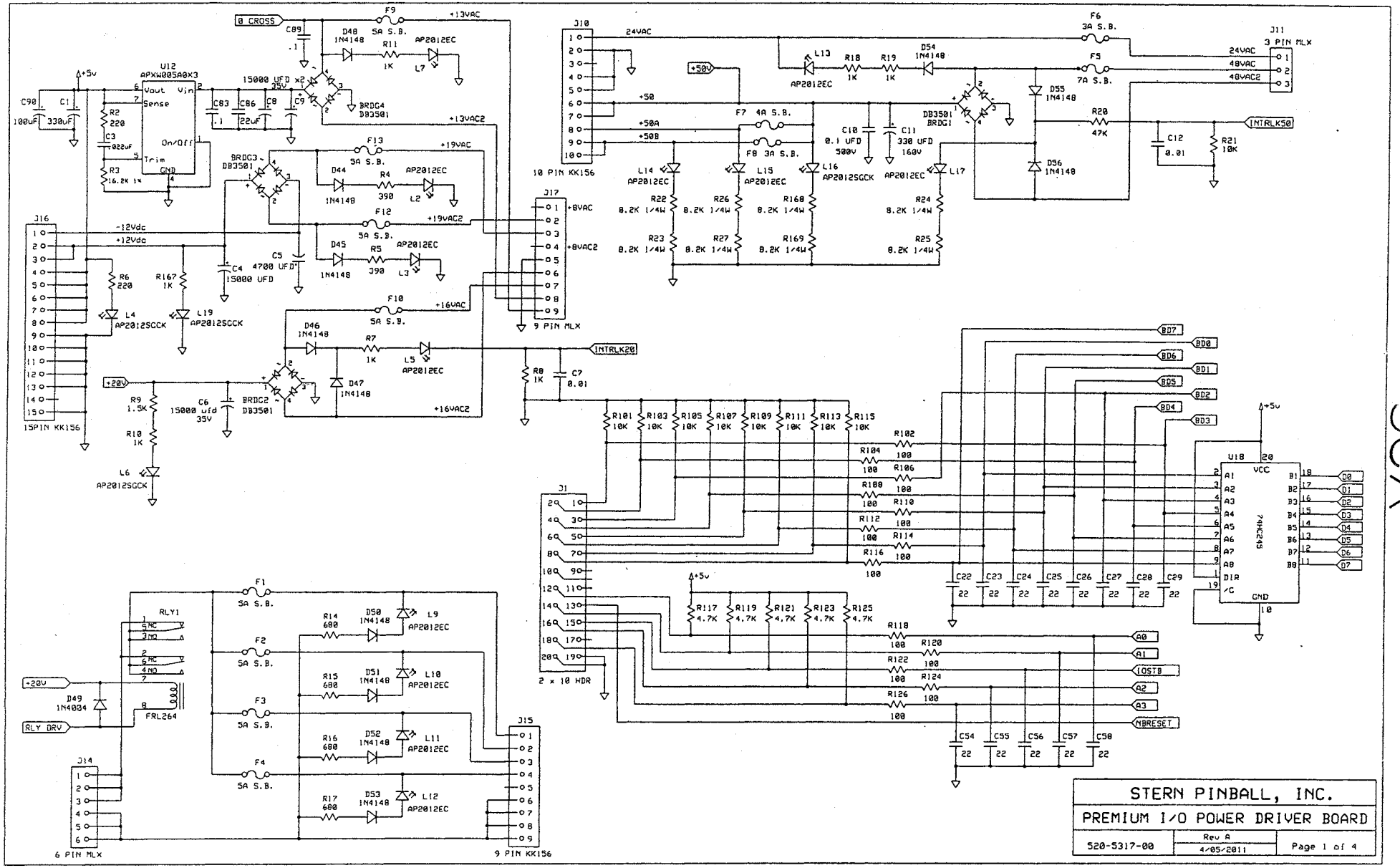
STERN PINBALL, INC.
PREMIUM I/O POWER DRIVER BOARD
520-5317-00
Rev A
4/05/2011
Page 1 of 4
U12
APXW005A0X3
Vout
Vin
Sense
On/Off
Trim
GND
0 CROSS
+13VAC
+13VAC2
+19VAC
+19VAC2
+16VAC
+16VAC2
+8VAC
+8VAC2
+5v
+20V
-12Vdc
+12Vdc
+50V
+50
+50A
+50B
24VAC
48VAC
48VAC2
J10
10 PIN KK156
J11
3 PIN MLX
J16
15PIN KK156
J17
9 PIN MLX
J1
2 x 10 HDR
J14
6 PIN MLX
J15
9 PIN KK156
RLY1
FRL264
RLY DRV
INTRLK20
INTRLK50
U18
74HC245
VCC
GND
DIR
/G
BD0
BD1
BD2
BD3
BD4
BD5
BD6
BD7
A0
A1
IOSTB
A2
A3
NBRESET
BRDG1
BRDG2
BRDG3
BRDG4
DB3501
15000 UFD x2 35V
15000 UFD
4700 UFD
15000 ufd 35V
0.1 UFD 500V
330 UFD 160V
AP2012EC
AP2012SGCK
1N4148
1N4004
8.2K 1/4W
4.7K
100
10K
1K
1.5K
220
22
0.01
47K
10K
100uF
330uF
.022uF
16.2K 1%
.1
22uF
390
680
1K
5A S.B.
4A S.B.
3A S.B.
7A S.B.
F1
F2
F3
F4
F5
F6
F7
F8
F9
F10
F12
F13
D44
D45
D46
D47
D48
D49
D50
D51
D52
D53
D54
D55
D56
R2
R3
R4
R5
R6
R7
R8
R9
R10
R11
R12
R13
R14
R15
R16
R17
R18
R19
R20
R21
R22
R23
R24
R25
R26
R27
R168
R169
R167
R101
R102
R103
R104
R105
R106
R107
R108
R109
R110
R111
R112
R113
R114
R115
R116
R117
R118
R119
R120
R121
R122
R123
R124
R125
R126
C1
C3
C4
C5
C6
C7
C8
C9
C10
C11
C12
C22
C23
C24
C25
C26
C27
C28
C29
C54
C55
C56
C57
C58
C83
C86
C89
C90
L2
L3
L4
L5
L6
L7
L9
L10
L11
L12
L13
L14
L15
L16
L17
L19

Y26

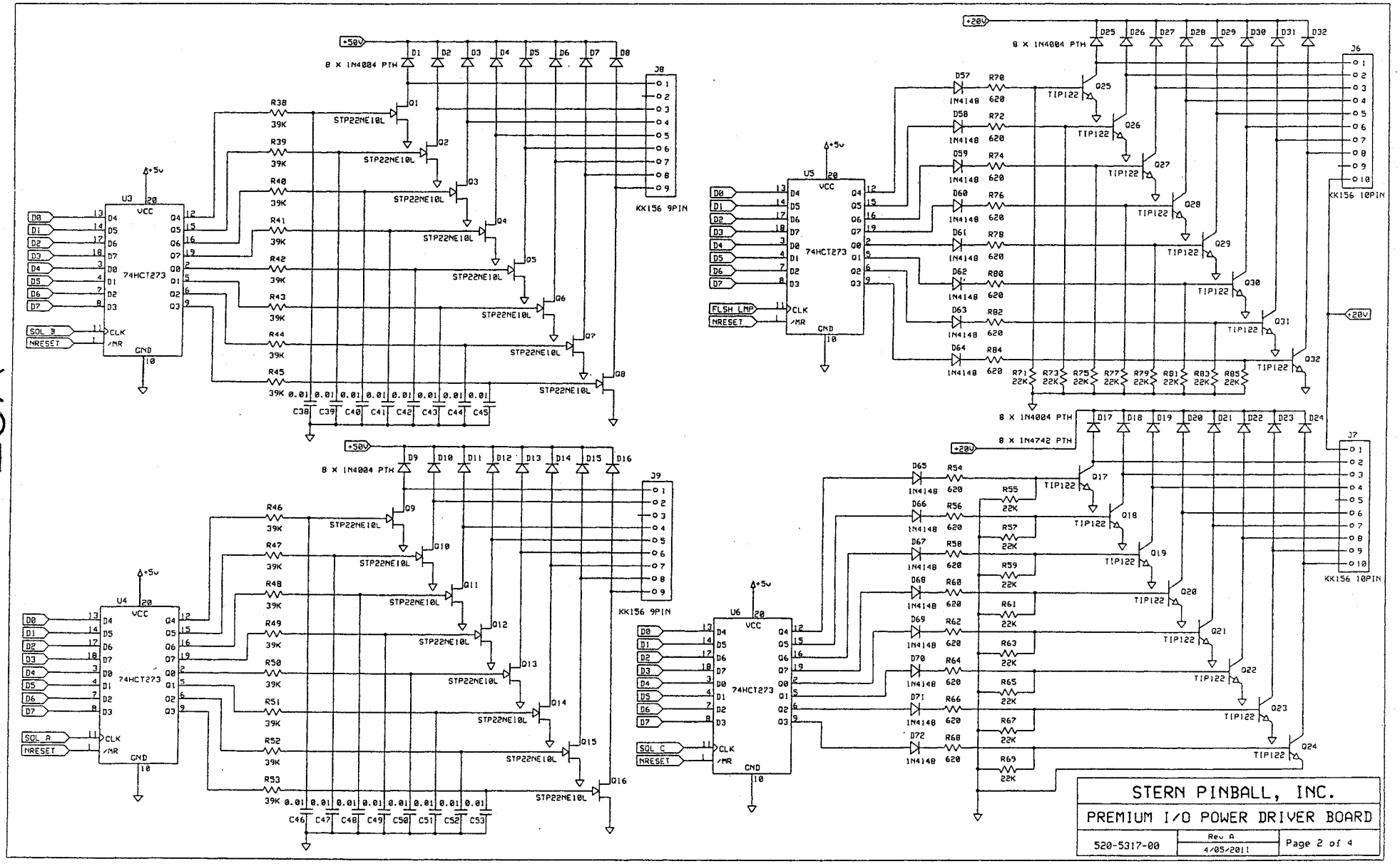
+50V
8 X 1N4004 PTH
D1 D2 D3 D4 D5 D6 D7 D8
J8
KK156 9PIN
R38 R39 R40 R41 R42 R43 R44 R45
39K
STP22NE10L
Q1 Q2 Q3 Q4 Q5 Q6 Q7 Q8
U3
74HCT273
+5V
VCC
GND
D0 D1 D2 D3 D4 D5 D6 D7
SOL B
NRESET
CLK
/MR
C38 C39 C40 C41 C42 C43 C44 C45
0.01
+20V
8 X 1N4004 PTH
D25 D26 D27 D28 D29 D30 D31 D32
J6
KK156 10PIN
D57 D58 D59 D60 D61 D62 D63 D64
1N4148
R70 R72 R74 R76 R78 R80 R82 R84
620
TIP122
Q25 Q26 Q27 Q28 Q29 Q30 Q31 Q32
U5
74HCT273
FLSH LMP
R71 R73 R75 R77 R79 R81 R83 R85
22K
+50V
8 X 1N4004 PTH
D9 D10 D11 D12 D13 D14 D15 D16
J9
KK156 9PIN
R46 R47 R48 R49 R50 R51 R52 R53
39K
STP22NE10L
Q9 Q10 Q11 Q12 Q13 Q14 Q15 Q16
U4
74HCT273
SOL A
NRESET
C46 C47 C48 C49 C50 C51 C52 C53
0.01
+20V
8 X 1N4004 PTH
8 X 1N4742 PTH
D17 D18 D19 D20 D21 D22 D23 D24
J7
KK156 10PIN
D65 D66 D67 D68 D69 D70 D71 D72
1N4148
R54 R56 R58 R60 R62 R64 R66 R68
620
R55 R57 R59 R61 R63 R65 R67 R69
22K
TIP122
Q17 Q18 Q19 Q20 Q21 Q22 Q23 Q24
U6
74HCT273
SOL C
NRESET
STERN PINBALL, INC.
PREMIUM I/O POWER DRIVER BOARD
520-5317-00
Rev A
4/05/2011
Page 2 of 4

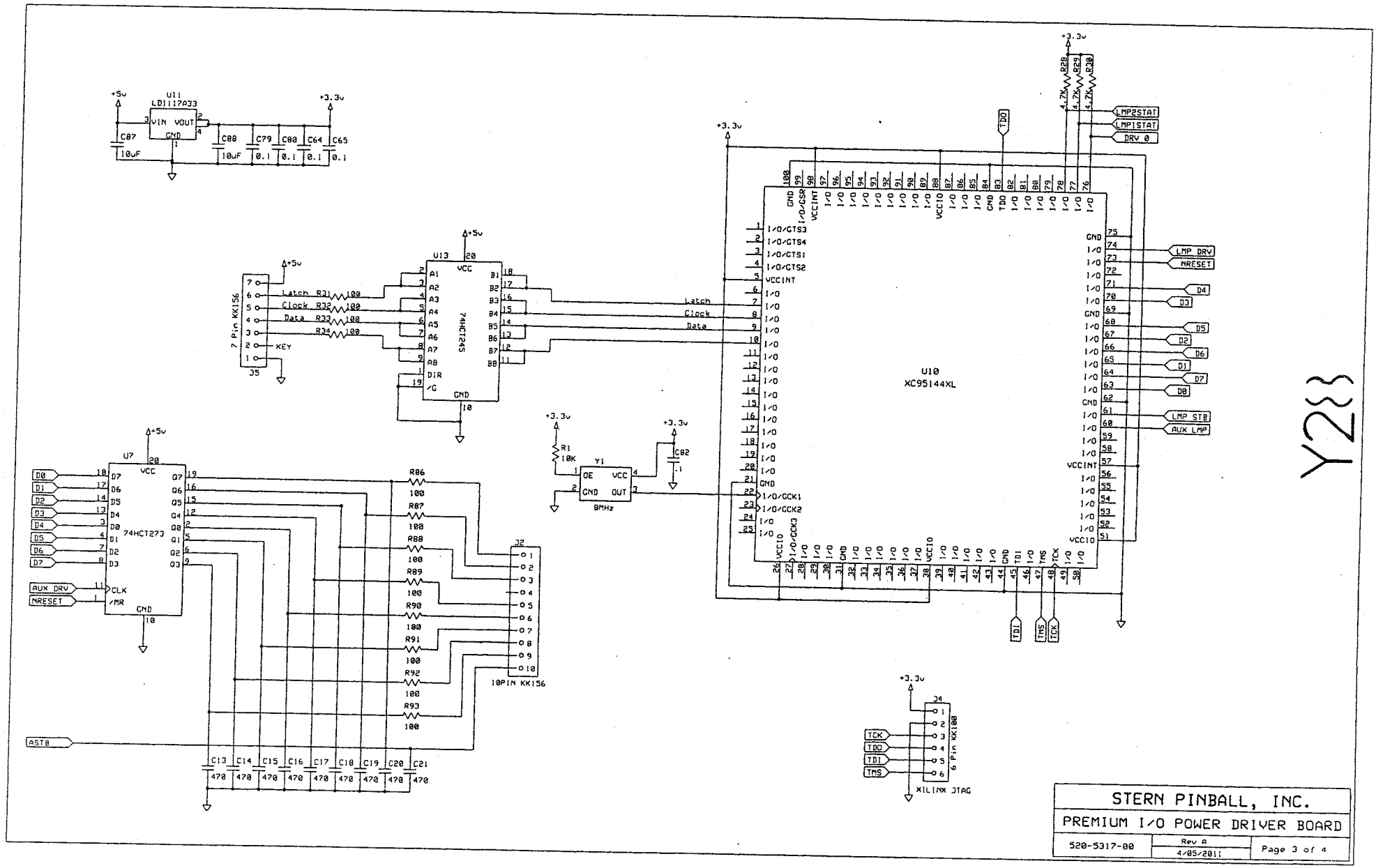

STERN PINBALL, INC.		
PREMIUM I/O POWER DRIVER BOARD		
520-5317-00	Rev A 4/05/2011	Page 3 of 4

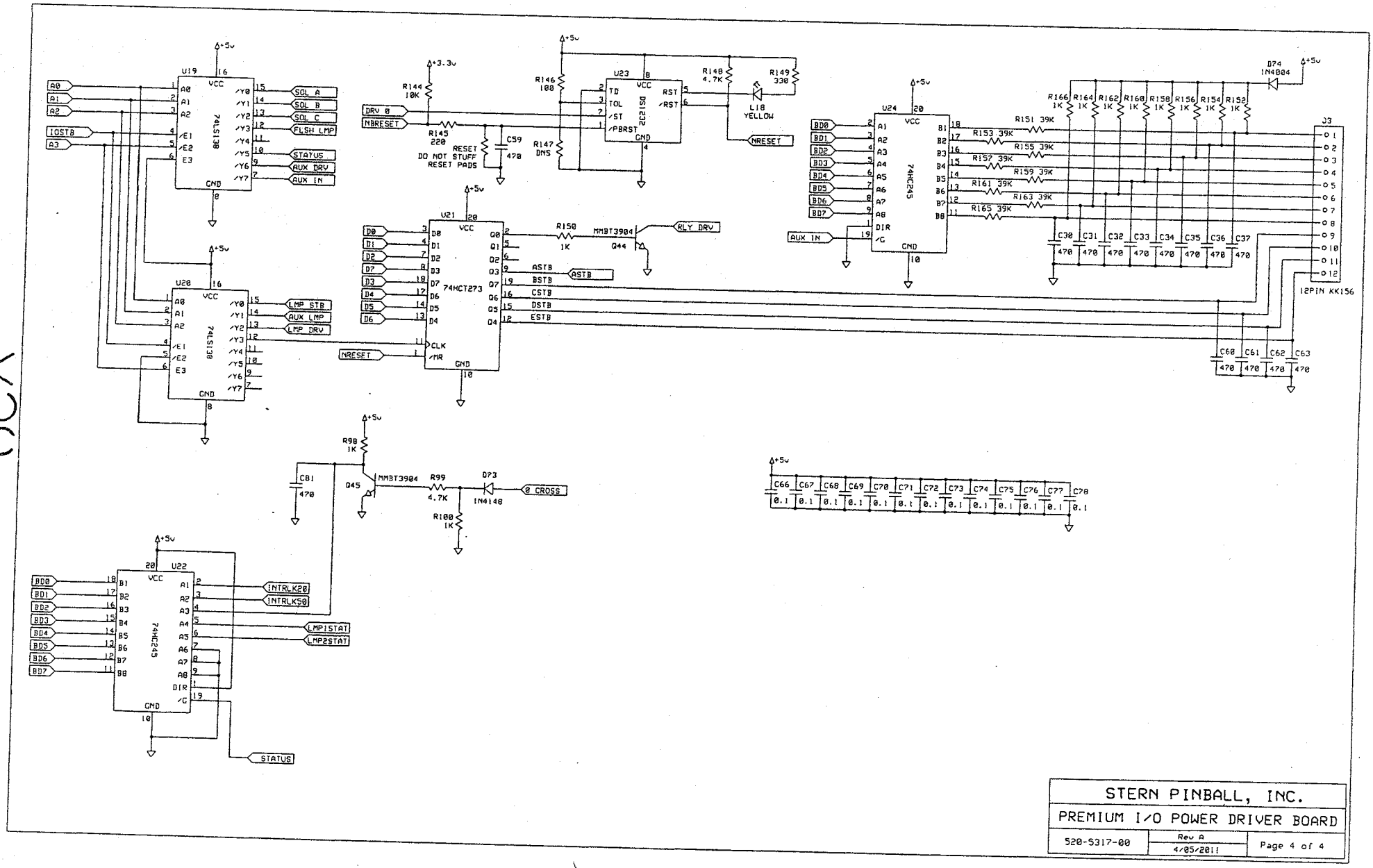

Y23

STERN PINBALL, INC.		
PREMIUM I/O POWER DRIVER BOARD		
520-5317-00	Rev A 4/05/2011	Page 4 of 4

CES

Creative Electronics and Software

Stern Mini CPU

520-5303-04
Revision A

Table of Contents:

Page 1: Title Page
Page 2: Processor
Page 3: I/O Connectors
Page 4: USB
Page 5: Regulator
Page 6: Audio DAC

PCB, Stern Mini CPU Rev 1

PC Assembly,Stern Mini CPU, Rev. 1, Core Design

PC Assembly, Stern Mini CPU, Rev. 1, Production

RightHand

RightHand Technologies, Inc.
5555 N. Glenwood Ave.
Chicago, IL 60631

Copyright 2011 All Rights Reserved

Document: SCH1014 Rev: A
Title: Stern Mini CPU
Page: Title Page
Variant: <Variant Name>
Modified: Wednesday, August 03, 2011
Sheet: 1 of 6
Author: CES\GCP

Proprietary and Confidential - Requires NDA

Y301

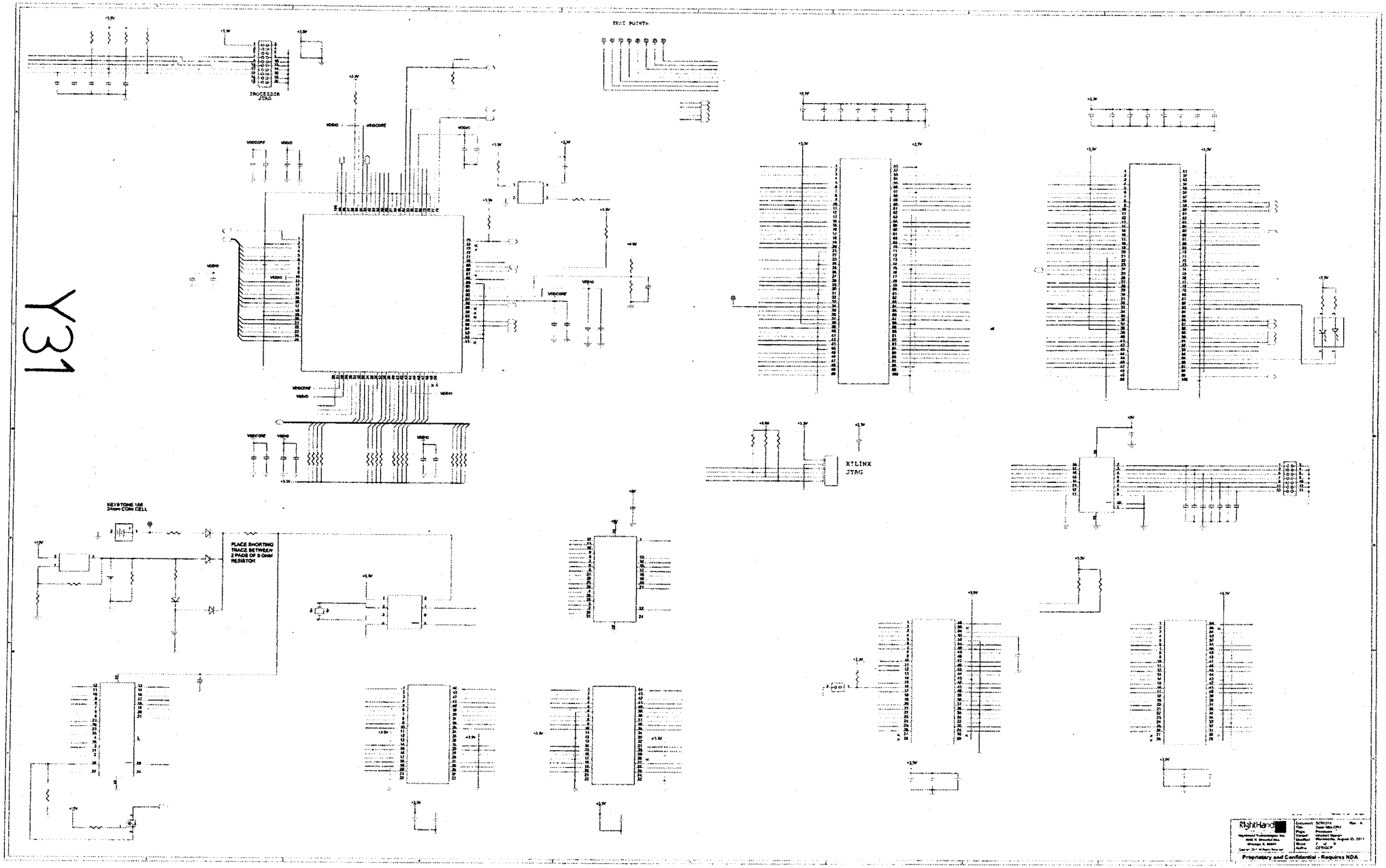
TEST POINTS
PROCESSOR JTAG
XILINX JTAG
KEYSTONE 105 24mm COIN CELL
PLACE SHORTING TRACE BETWEEN 2 PADS OF 0 OHM RESISTOR
Y31
Proprietary and Confidential - Requires NDA

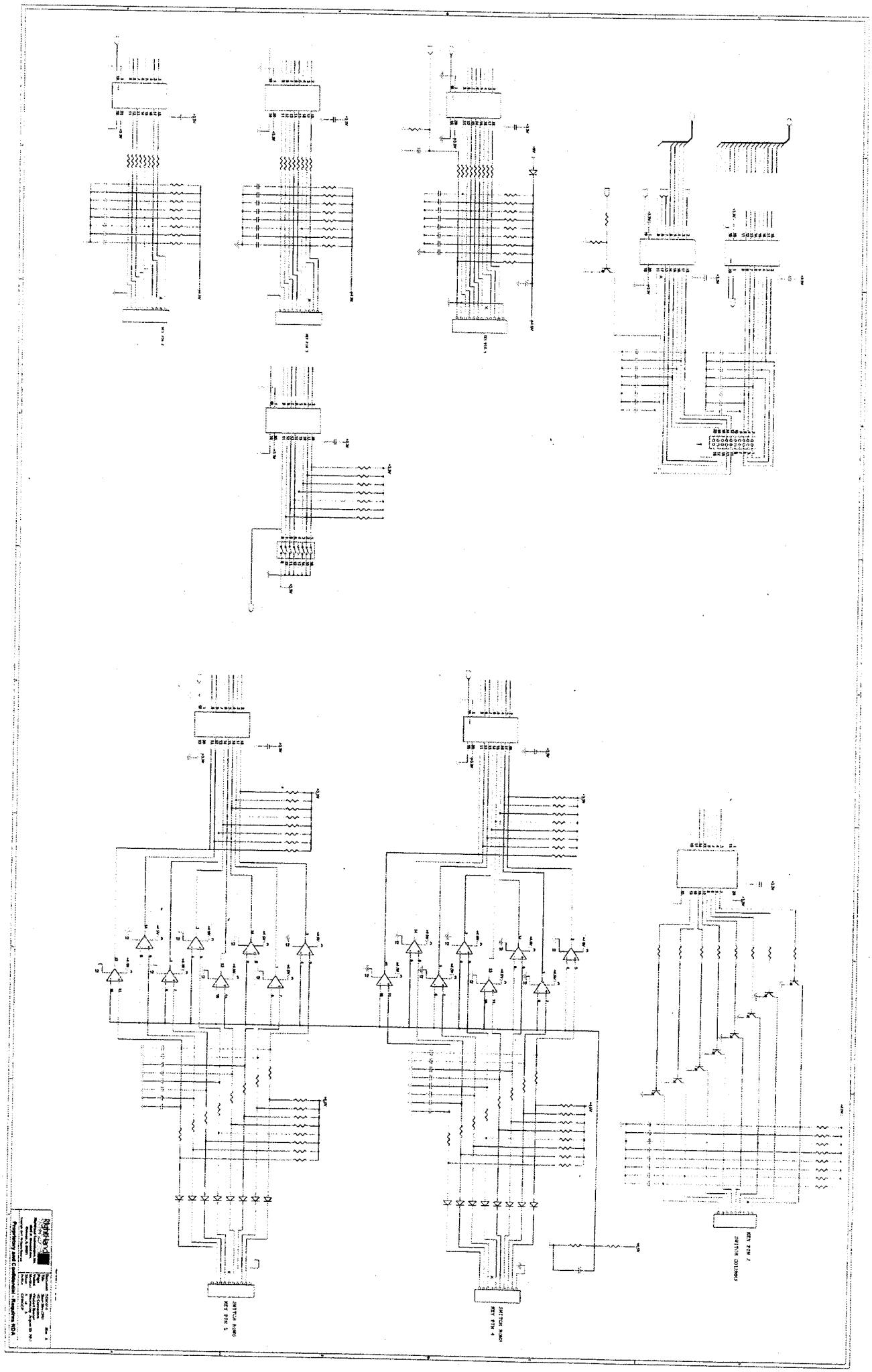

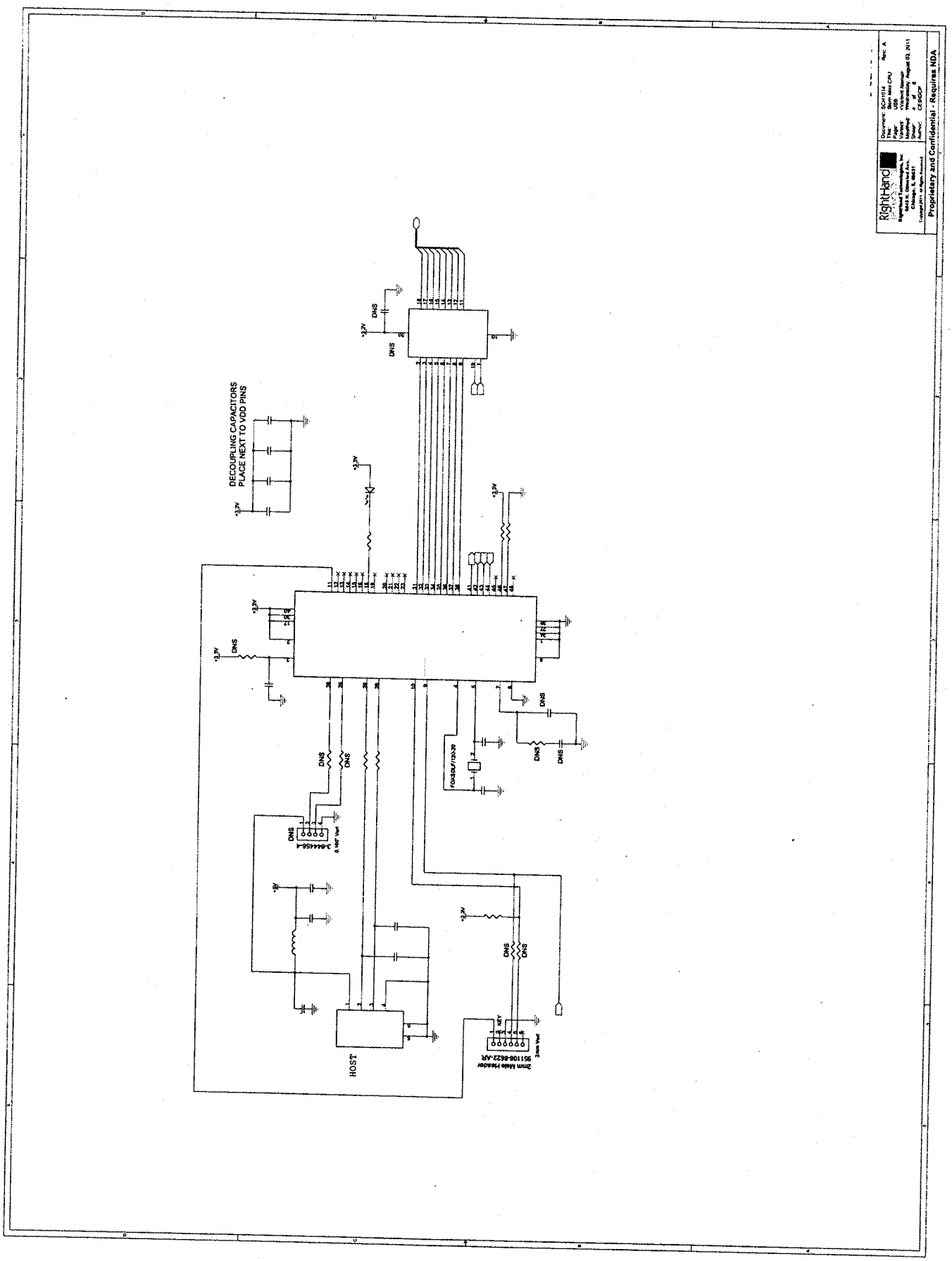
RightHand
Proprietary and Confidential - Requires NDA
DECOUPLING CAPACITORS
PLACE NEXT TO VDD PINS
HOST
DNS
+3.3V

Y33

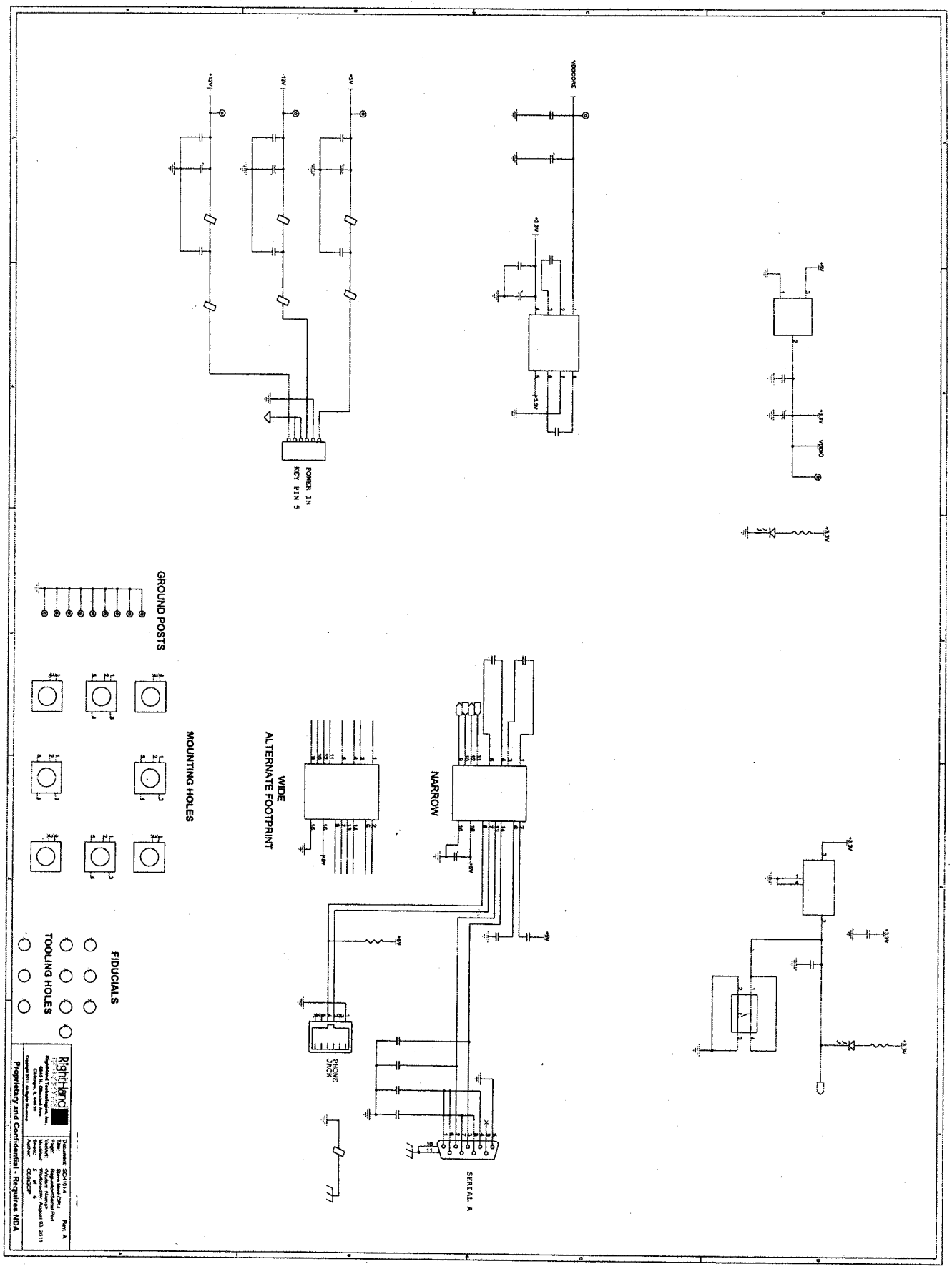
GROUND POSTS
MOUNTING HOLES
FIDUCIALS
TOOLING HOLES
WIDE
ALTERNATE FOOTPRINT
NARROW
POWER IN
KEY PIN 5
PHONE
JACK
SERIAL A
VIDEO
Proprietary and Confidential - Requires NDA

Y34

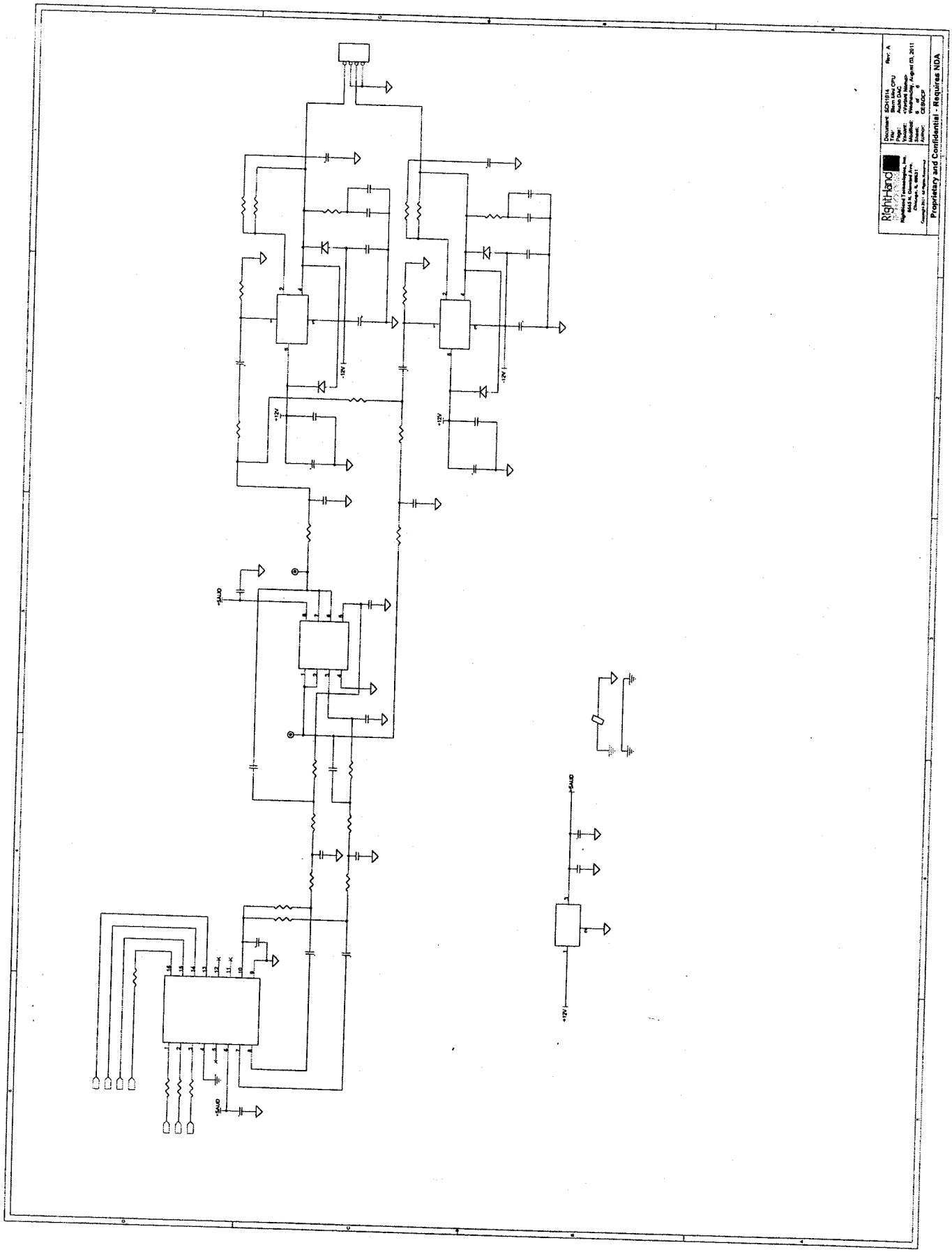

Y35

S.A.M. SYSTEM BOARD TYPE TABLE

Game Name	CPU Bd. No.	I/O PWR DRV Bd. No.	U9 Pinball Boot ROM
World Poker Tour	520-5246-00	520-5249-00	V3.1
Pirates Of The Caribbean	520-5246-00	520-5249-00	V3.1
Family Guy	520-5246-00	520-5249-00	V3.1
Spider-Man	520-5246-00	520-5249-00	V3.1
Wheel Of Fortune	520-5246-00	520-5249-00	V3.1
NBA	520-5246-00	520-5249-00	V3.1
CSI	520-5246-00	520-5249-00	V3.1
Batman	520-5246-00	520-5249-00	V3.1
Indiana Jones	520-5246-00	520-5249-00	V3.1
Shrek	520-5246-00	520-5249-00	V3.1
24	520-5246-00	520-5249-00	V3.1
Avatar	520-5246-00	520-5249-00	V3.1
Big Buck Hunter	520-5246-00	520-5249-00	V3.1
Iron Man	520-5246-00	520-5249-00	V3.1
The Rolling Stones	520-5246-00	520-5249-00	V3.1
Tron	520-5246-00	520-5249-00	V3.1
Avatar L/E	520-5303-03	520-5249-00	V3.1
The Rolling Stones L/E	520-5303-03	520-5249-00	V3.1
Tron L/E	520-5303-03	520-5317-00	V3.1
Transformers	520-5246-02	520-5249-00	V2.0
Transformers L/E	520-5303-04	520-5317-00	V2.0
AC/DC	520-5337-01	520-5249-00	AC/DC 1.0
AC/DC (L/E)	520-5337-00	520-5317-00	AC/DC 1.0
X-MEN	520-5246-02	520-5249-00	V2.0
X-MEN (L/E)	520-5303-04	520-5317-00	V2.0
Batman (Standard)	520-5303-03	520-5249-00	V3.1
Iron Man (Classic)	520-5303-01	520-5304-00	Not Used
The Simpsons Kooky Carnival (RED	520-5246-00	520-5249-00	V3.1