This document has been downloaded from:

The largest resource for amusement machines documentation on the world wide web!

FLIPPERSPILL.COM

BATTLE WINGS™

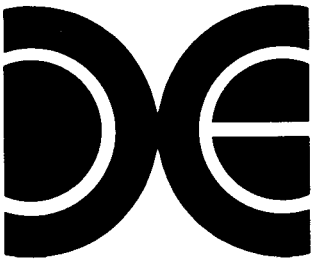

INSTALLATION INSTRUCTIONS

DATA EAST USA, INC.

470 Gianni Street, Santa Clara, CA 95050
Telephone: (408) 727-4490
Toll Free: (800) 538-5129
Tellex: 172163 DATA EAST SNTA

TABLE OF CONTENTS

	PAGE
Game Instructions	1
Option Switch Settings	2
Power Supply Requirements	3
Operating Environment	3
CRT Monitor Signals	3
PCB Identification	4
Monitor Drive Circuit	5
Coin Counter Circuit	6
Power Supply Circuit	7
Main Harness Terminations	8
Schematic Diagrams	
Wells Gardner Monitor	9
SCU - 01 PCB (8 Sheets)	10
MCU - 01 PCB (6 Sheets)	18
CCU - 01 PCB (7 Sheets)	24

DIP SWITCH SETTINGS

DIP SWITCH 1					
No.	SETTING				
1	OFF	ON	OFF	ON	RIGHT SELECTOR COIN CREDIT
2	OFF	OFF	ON	ON	
	1 COIN 1 CREDIT	1 COIN 2CREDIT	1 COIN 3 CREDIT	2 COIN 1 CREDIT	
3	OFF	ON	OFF	ON	LEFT SELECTOR COIN CREDIT
4	OFF	OFF	ON	ON	
	1 COIN 1 CREDIT	1 COIN 2 CREDIT	1 COIN 3 CREDIT	2 COIN 1 CREDIT	
5	OFF		ON		GAME DIAG MODE
	GAME		DIAG		
6	OFF		ON		C T U R MODE
	TABLE		UPRIGHT		
7	OFF		ON		KEEP OFF
	GAME		TEST		
8	OFF		ON		KEEP OFF
	GAME		TEST		

DIPSWITCH 2					
No.	SETTING				
1	OFF		ON		NUMBER OF AIR CRAFTS
	3		5		
2	OFF	ON	OFF	ON	BONUS AIR CRAFT
3	OFF	OFF	ON	ON	
	20,000 EXTRA FIGHTER, OVER 20,000 EXTRA FIGHTER FOR EVERY 40,000	20,000 EXTRA FIGHTER, OVER 20,000 EXTRA FIGHTER FOR EVERY 60,000	40,000 EXTRA FIGHTER, OVER 40,000 EXTRA FIGHTER FOR EVERY 80,000	40,000 EXTRA FIGHTER	
4	OFF		ON		DIFFICULTY ENEMY CRAFTS
	EASY		DIFFICULT		
5	OFF		ON		DIFFICULTY MISSILES
	EASY		DIFFICULT		
6					NOT USED
7	OFF		ON		JAPAN/ UNITED STATES
	JAPAN		UNITED STATES		
8					NOT USED

POWER SUPPLY

+5V	±2%	5A
+12V	±2%	1A
−5V	±2%	0.1A

OPERATION ENVIRONMENTS

	Temperature	Humidity
Operation	5 ~ 35° C	20 ~ 80%
Storage	−15 ~ 65° C	10 ~ 90%

CRT MONITOR

(1) **Color Signals** R.G.B. Separate

Black 0 – +2V

Image Signal +2.5 V +4V

(2) **Synchronize Signal** Composite or Horiz/Vert separated.

0 0 – 0.5V

1 +3V – +5V

PCB IDENTIFICATION

CONNECTOR SCU-01 CR7E-36DA-3.96E (CN-2)
CCU-01 CR7E-20DA-3.96E (CN-3)

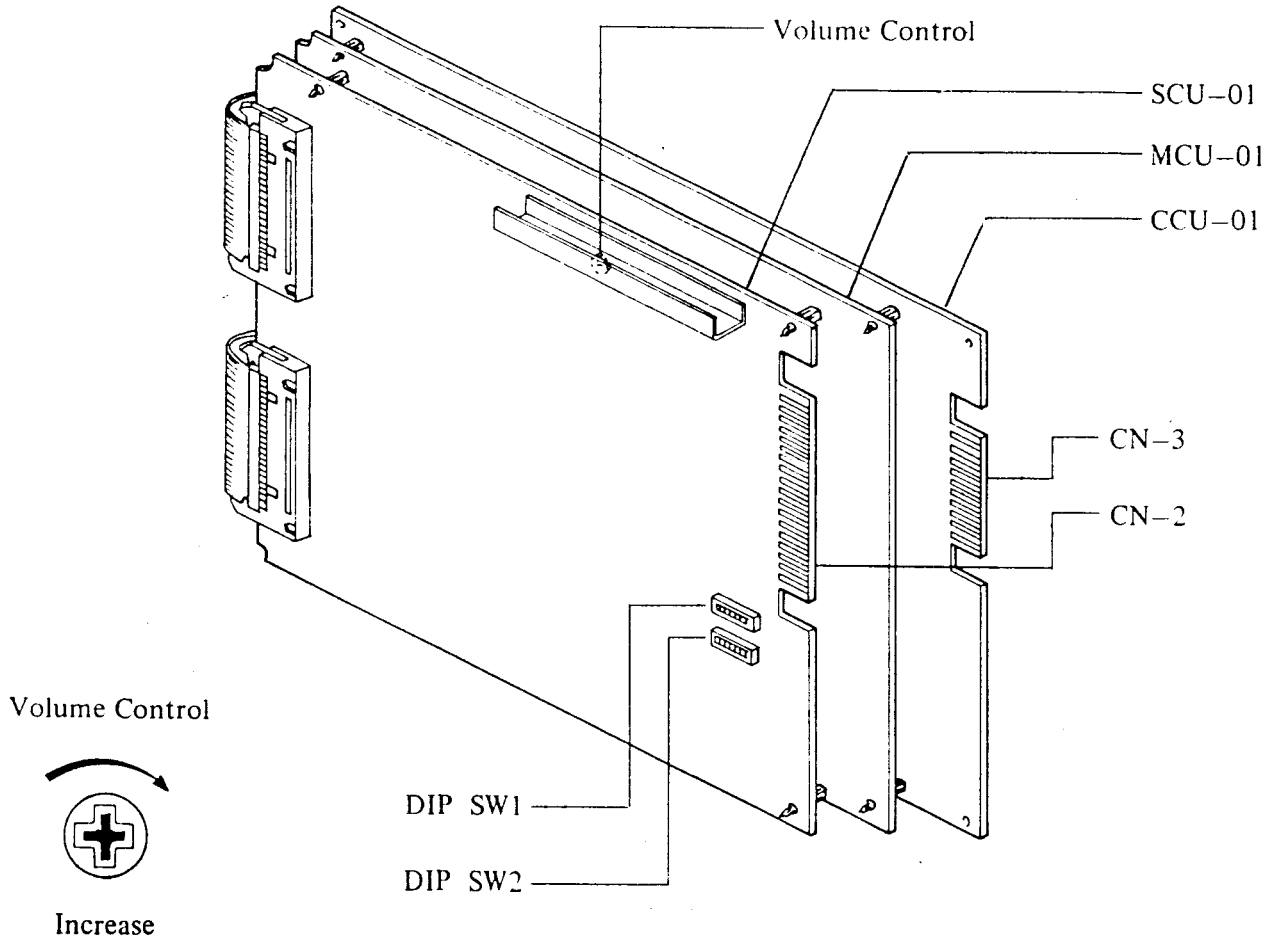

MONITOR CONNECTION PCB CCU-01

Monitor input composite signals – Horiz/Vert on +5V can be connected.

Circuit diagram of each signal shown below.

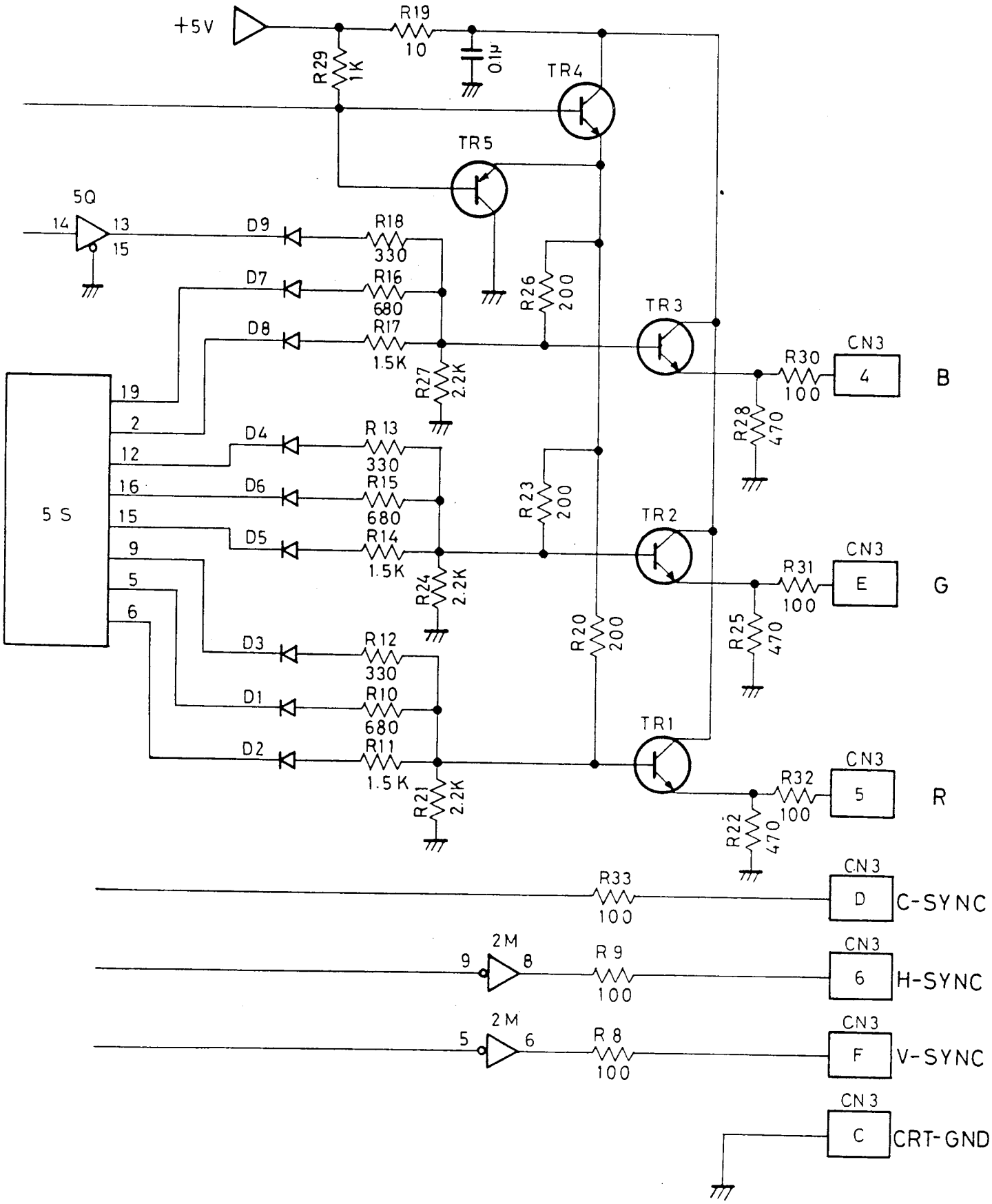

COIN COUNTER - CIRCUIT

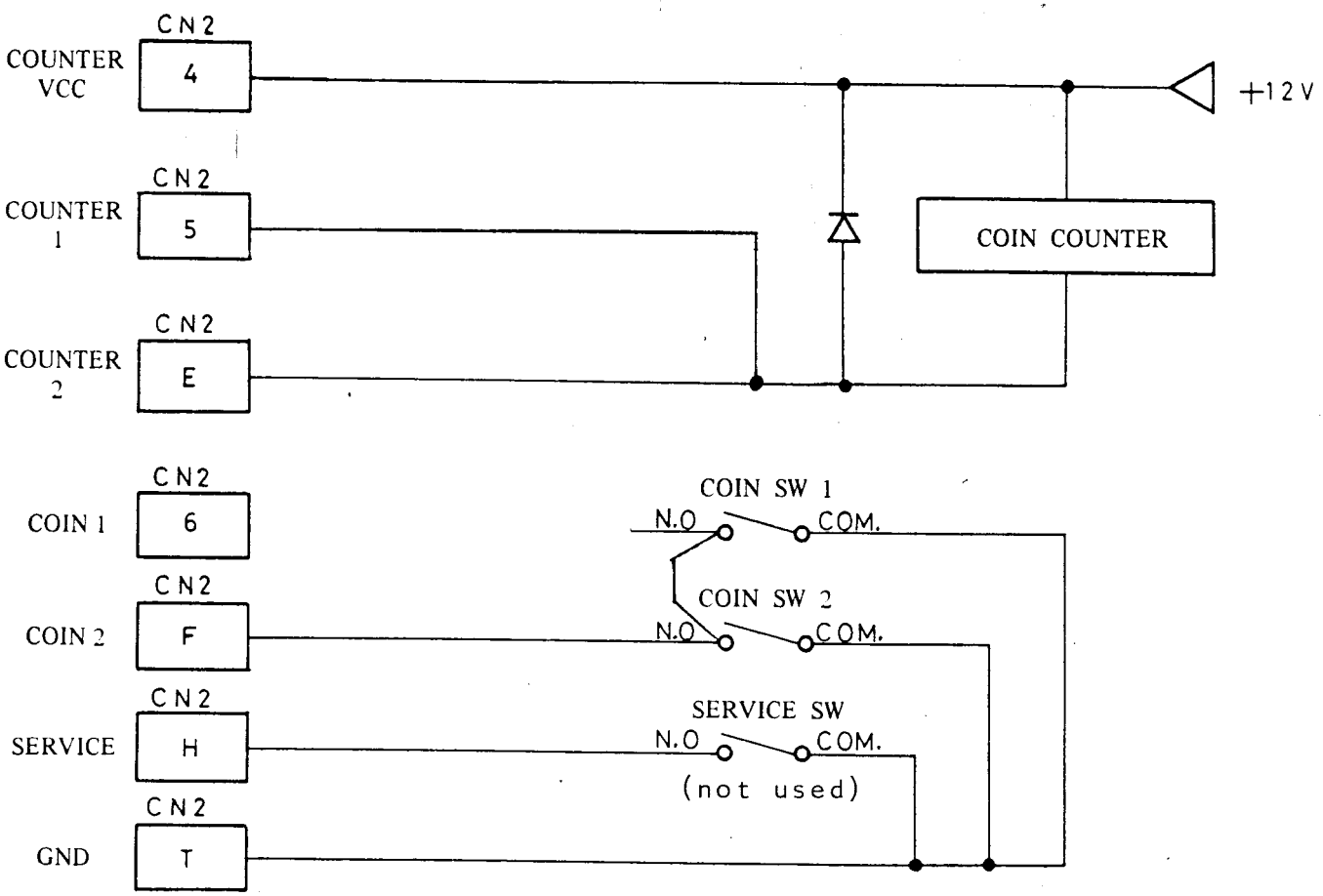

COIN COUNTER – DRIVE CIRCUIT PCB SCU–01

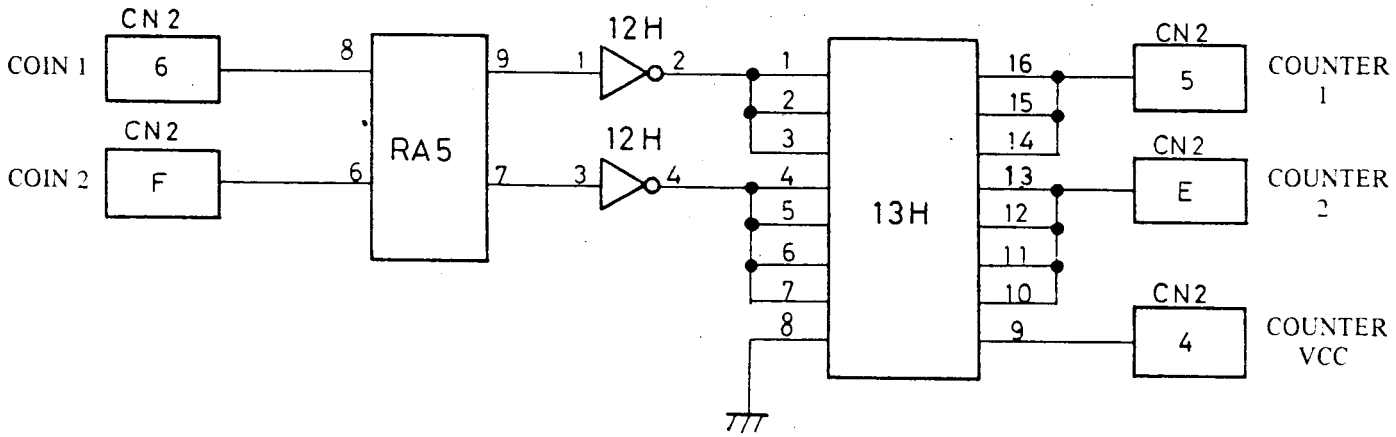

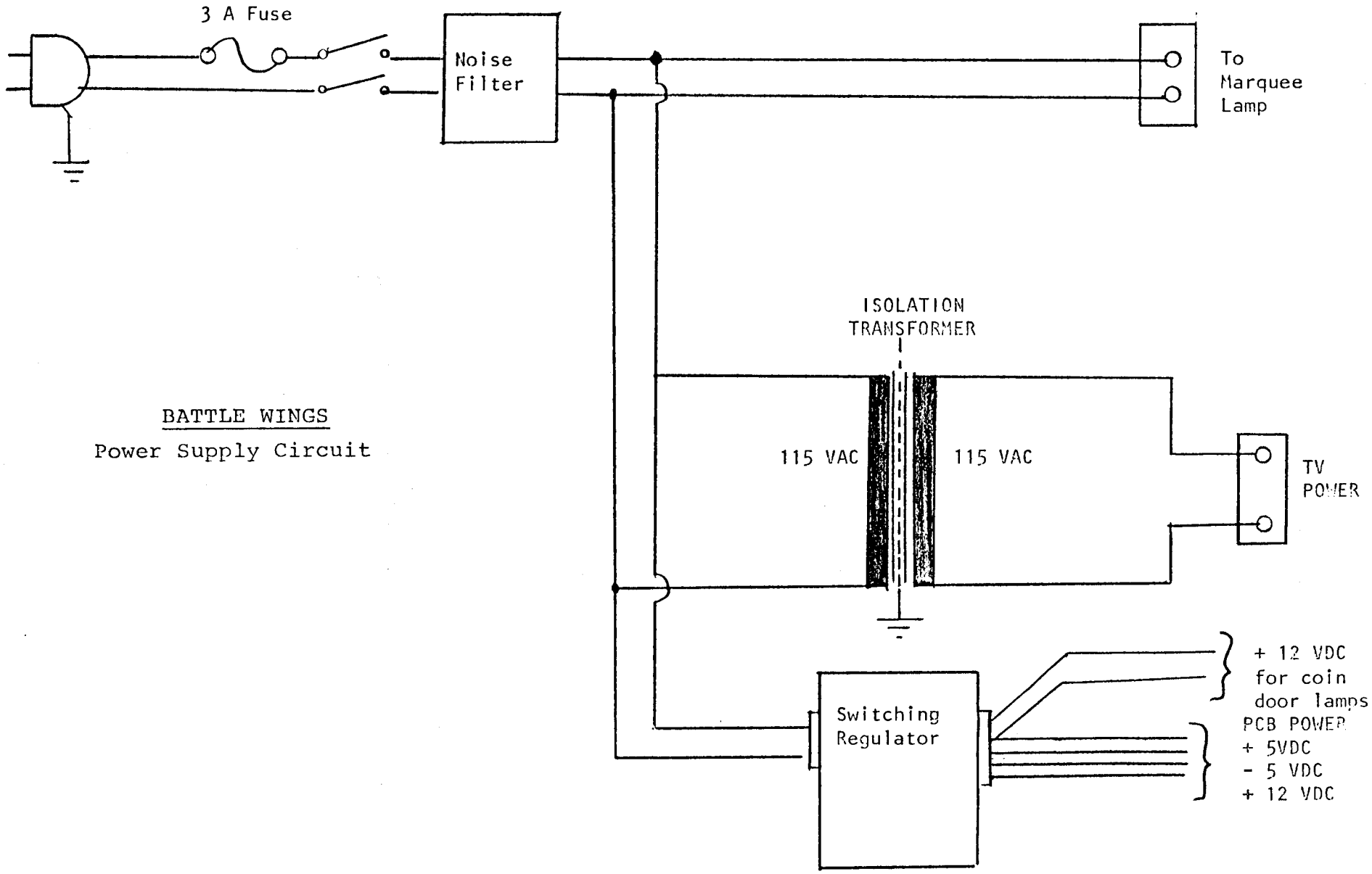

BATTLE WINGS

Power Supply Circuit

HARNESS CONNECTION

1) Terminal Numbering

CR7E-36DA-3.96E (HIROSE) 3.96mm Pitch

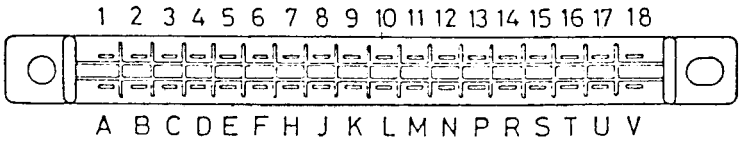

CR7E-20DA-3.96E (HIROSE) 3.96mm Pitch

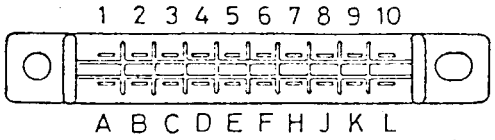

2) Signal to Terminal

CCU-01 Connector CN3-CR7E-20DA-3.96E

Pin	Signal		Pin	Signal	
1	GND		A	GND	
2	GND		B	GND	
3	GND		C	TV. GND	
4	TV. B		D	SYNC.	
5	TV. R		E	TV. G	
6	H-SYNC		F	V-SYNC	
7			H		
8	+5V		J	+5V	
9	+5V		K	+5V	
10	+5V		L	+5V	

SCU-01 Connector CN2-CR7E-36DA-3.96E

Pin	Signal		Pin	Signal	
1	+12V		A	+12V	
2	+5V		B	+5V	
3	+5V		C	+5V	
4	COUNTER Vcc		D	−5V	
5	COUNTER 1		E	COUNTER 2	
6	COIN 1		F	COIN 2	
7	TILT SW.		H	SERVICE	
8	1P		J	2P	
9	1P SHOOT 2		K	2P SHOOT 2	COCKTAIL TABLE ONLY
10	1P SHOOT 1		L	2P SHOOT 1	
11	1P DOWN		M	2P DOWN	
12	1P UP		N	2P UP	
13	1P LEFT		P	2P LEFT	
14	1P RIGHT		R	2P RIGHT	
15	SPEAKER +		S	SPEAKER −	
16	GND		T	GND	
17	GND		U	GND	
18	GND		V	GND	

19" COLOR GAME MONITOR SCHEMATIC DIAGRAM

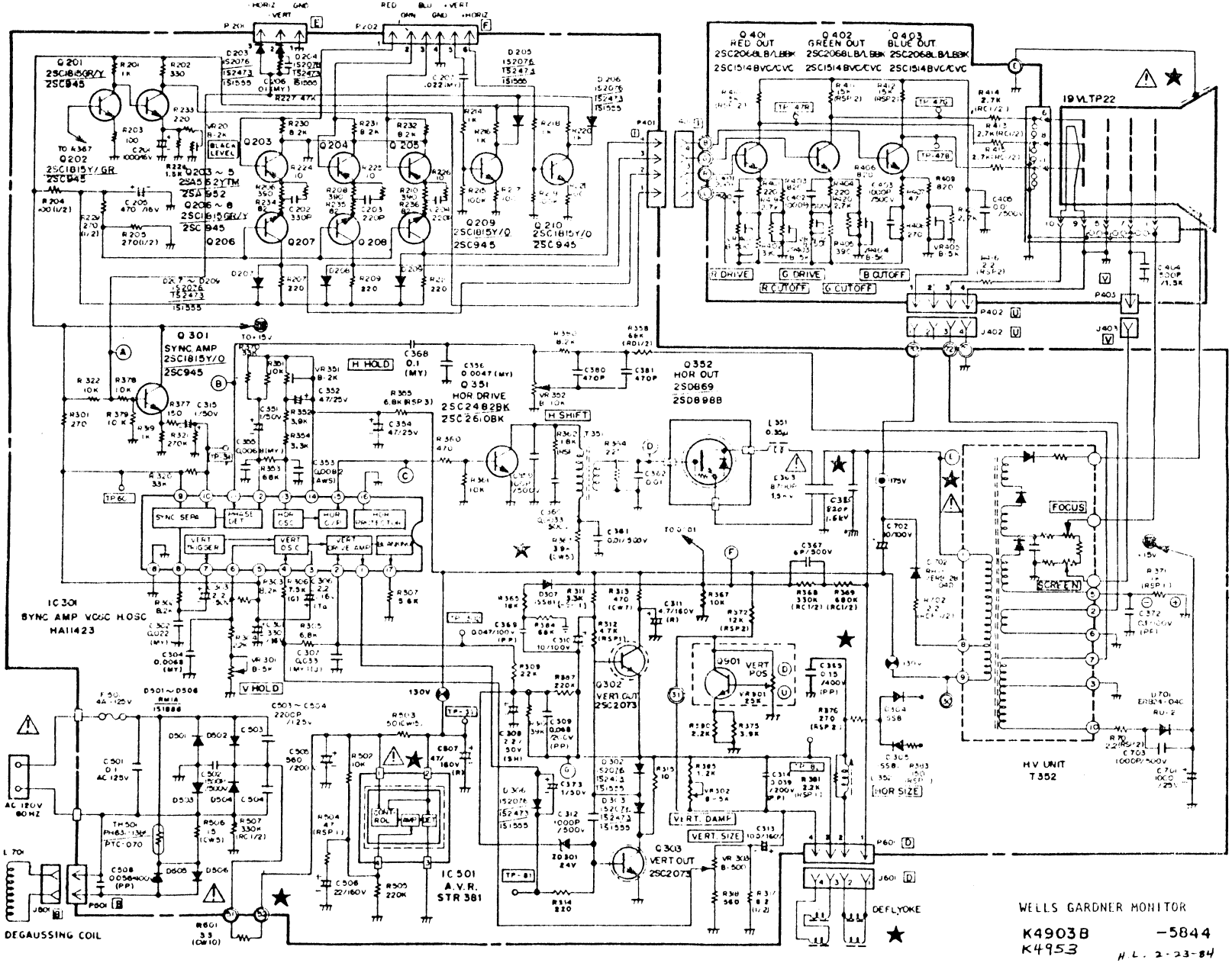

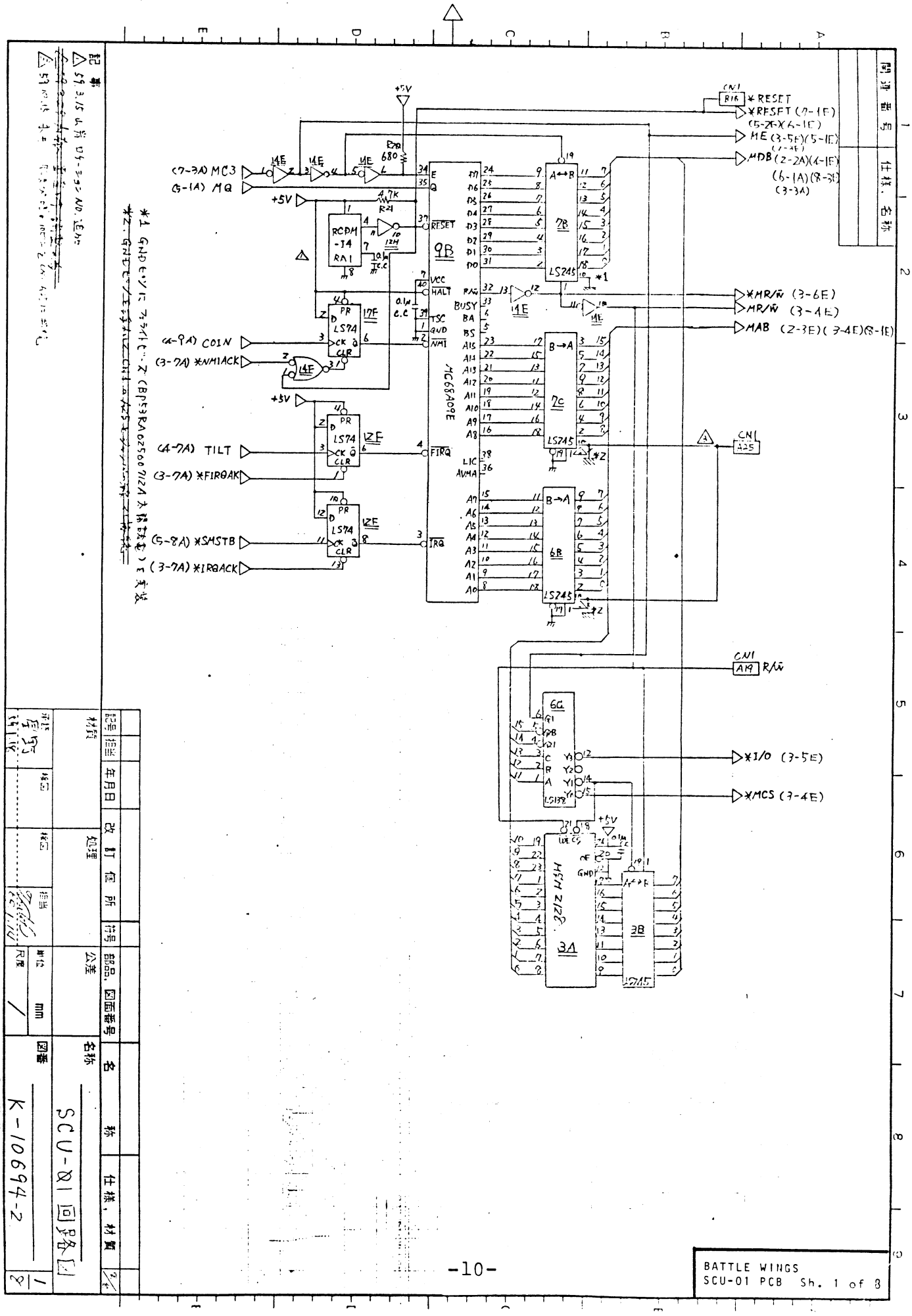

関連番号	仕様, 名称

記号	担当	年月日	改訂	住所	付号	部品, 図面番号	名称	仕様, 材質	2/8
材質			処理			公差	名称	SCU-01回路図	
材質	担当		検図		担当	単位 mm	図番	K-10694-2	1/8

記事
△59.3.15 ムラ ロットコード NO. 追加
△59.10.15 [illegible]

第3角法

データイースト株式会社

BATTLE WINGS
SCU-01 PCB Sh. 1 of 8

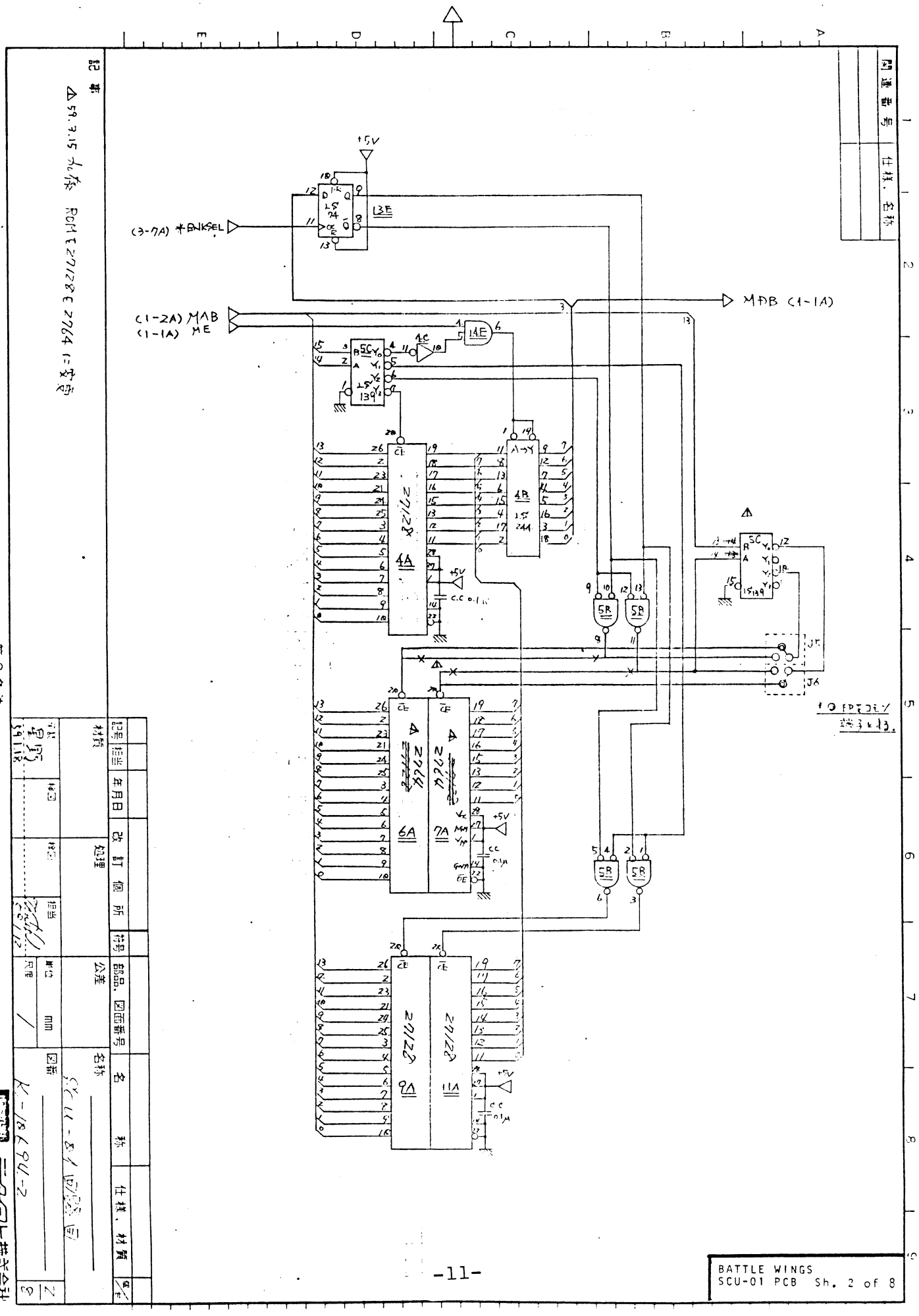

BATTLE WINGS
SCU-01 PCB Sh. 2 of 8

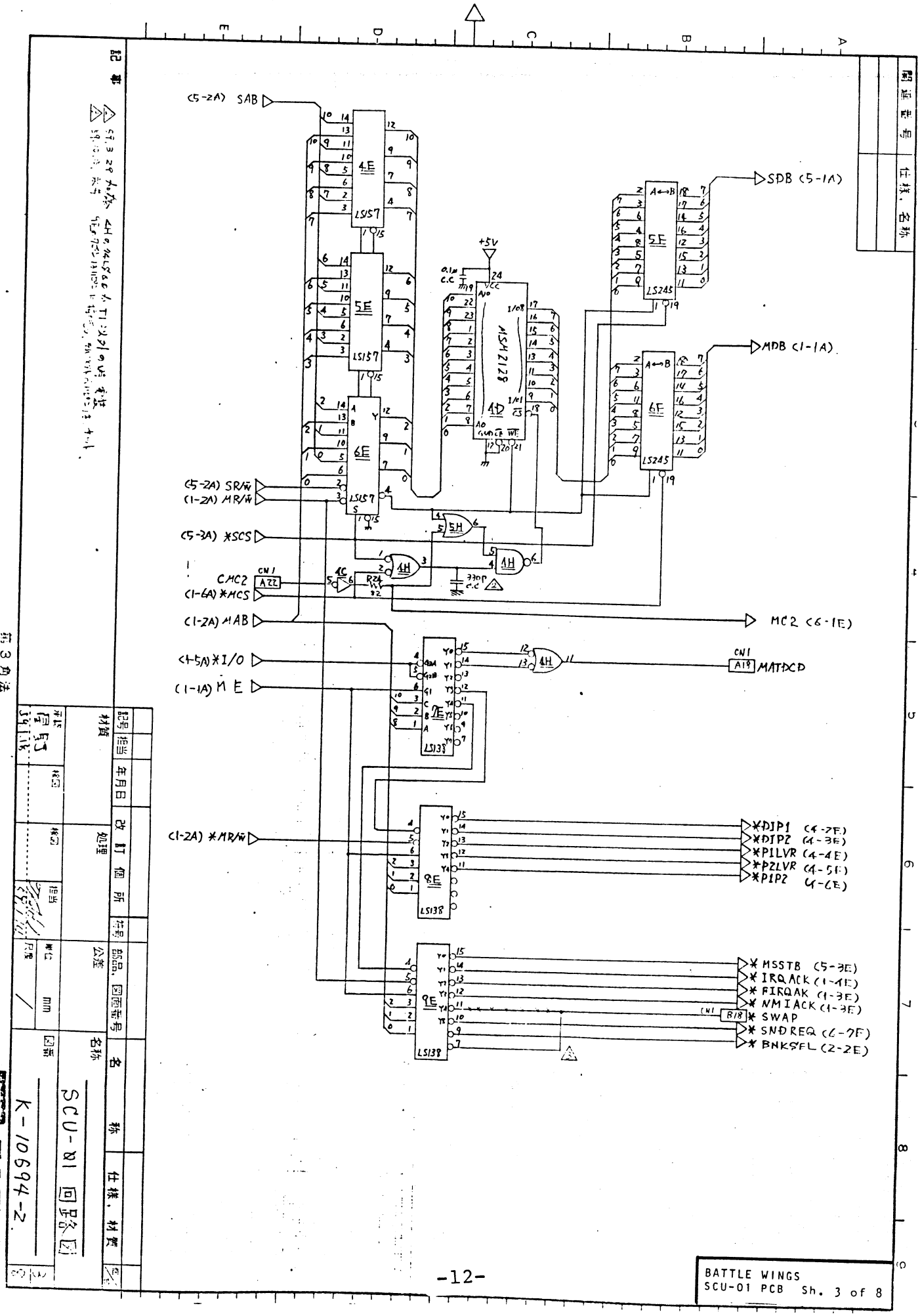

BATTLE WINGS
SCU-01 PCB Sh. 3 of 8

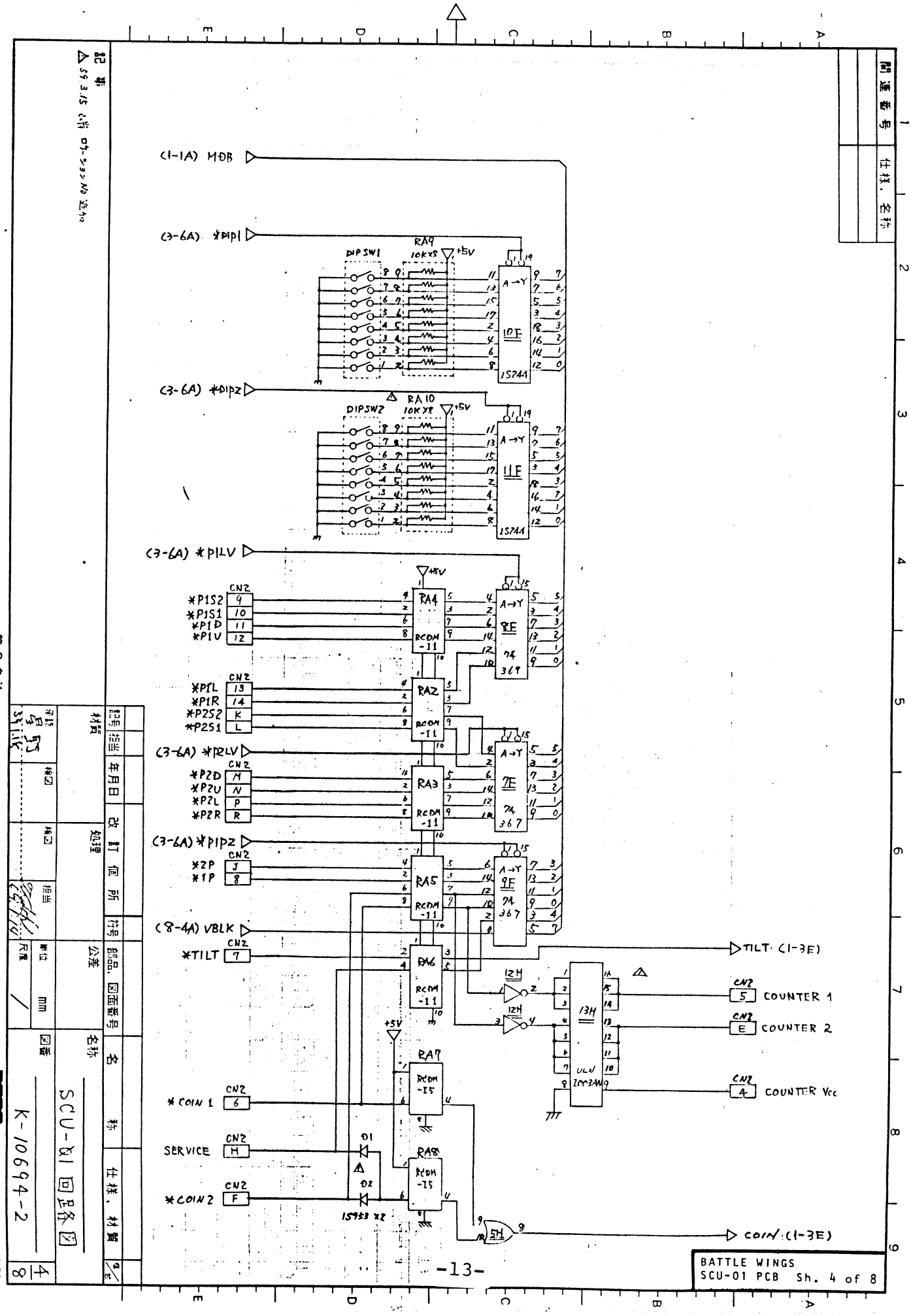

BATTLE WINGS
SCU-01 PCB Sh. 4 of 8

第3角法

記号	年月日	改訂個所	担当	部品、図面番号	名称	仕様、材質

材質	処理	公差	名称
材料	検図	検図	担当	尺度	単位 mm	図番

SCU-01 回路図
K-10694-2
4/8

テクノスト株式会社

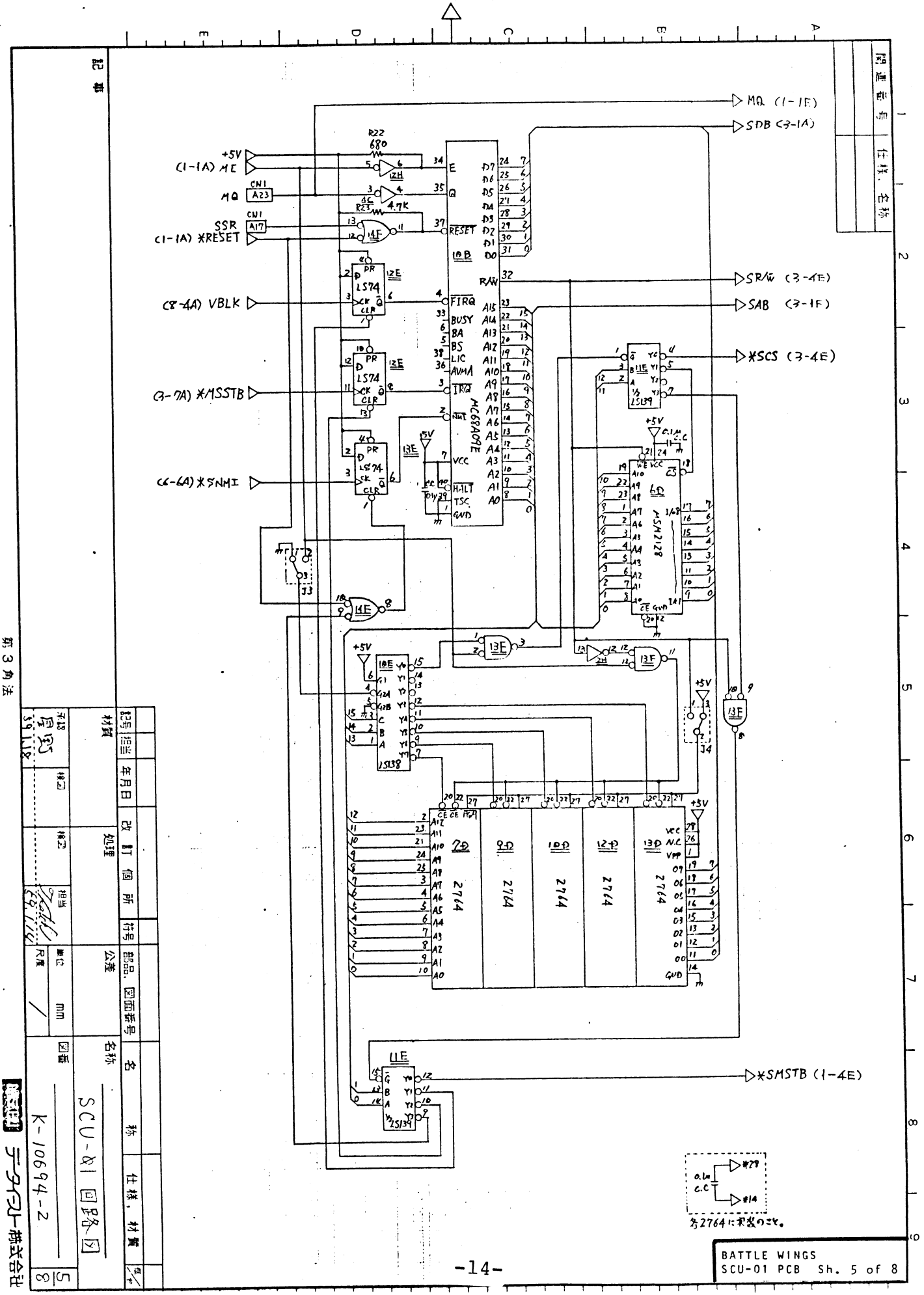
MQ (1-1E)
SDB (3-1A)
SR/W (3-4E)
SAB (3-1F)
*SCS (3-4E)
*SMSTB (1-4E)
(1-1A) ME
MQ
SSR
(1-1A) *RESET
(8-4A) VBLK
(3-7A) *MSSTB
(6-6A) *SNMI
MC68A09E
LS74
LS138
LS139
MSM2128
2764
SCU-01 回路図
K-10694-2
BATTLE WINGS
SCU-01 PCB Sh. 5 of 8

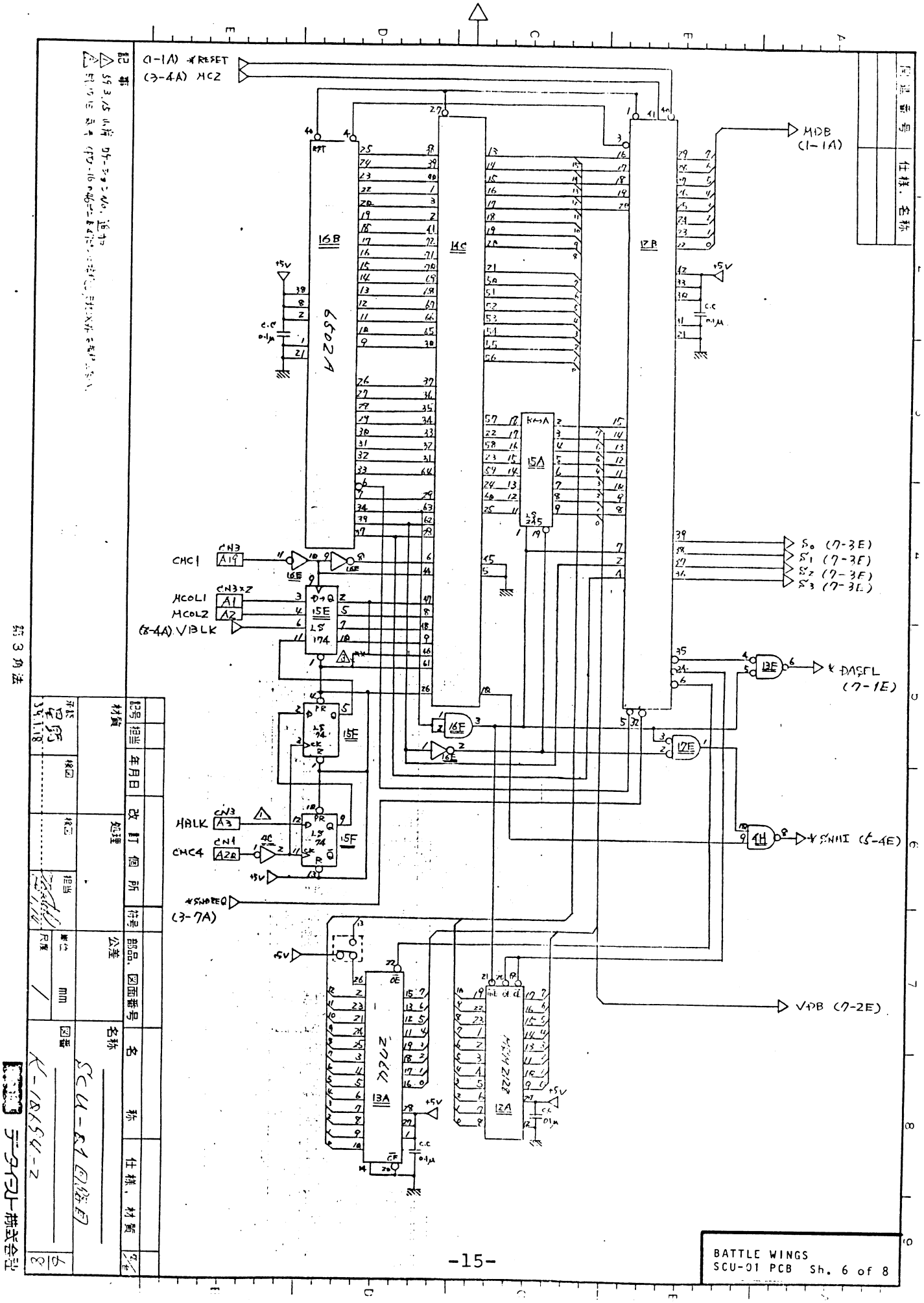

BATTLE WINGS
SCU-01 PCB Sh. 6 of 8

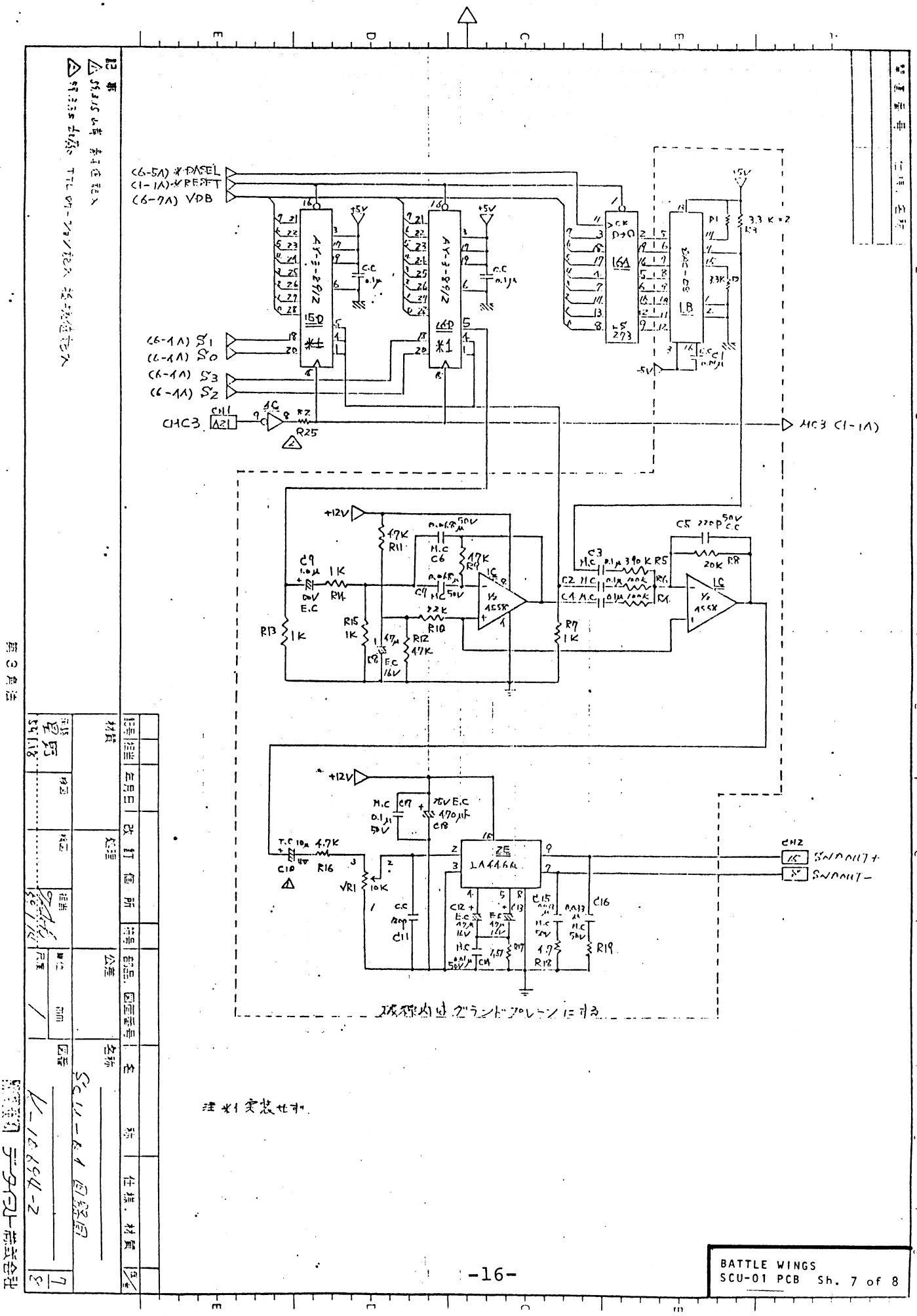

BATTLE WINGS
SCU-01 PCB Sh. 7 of 8

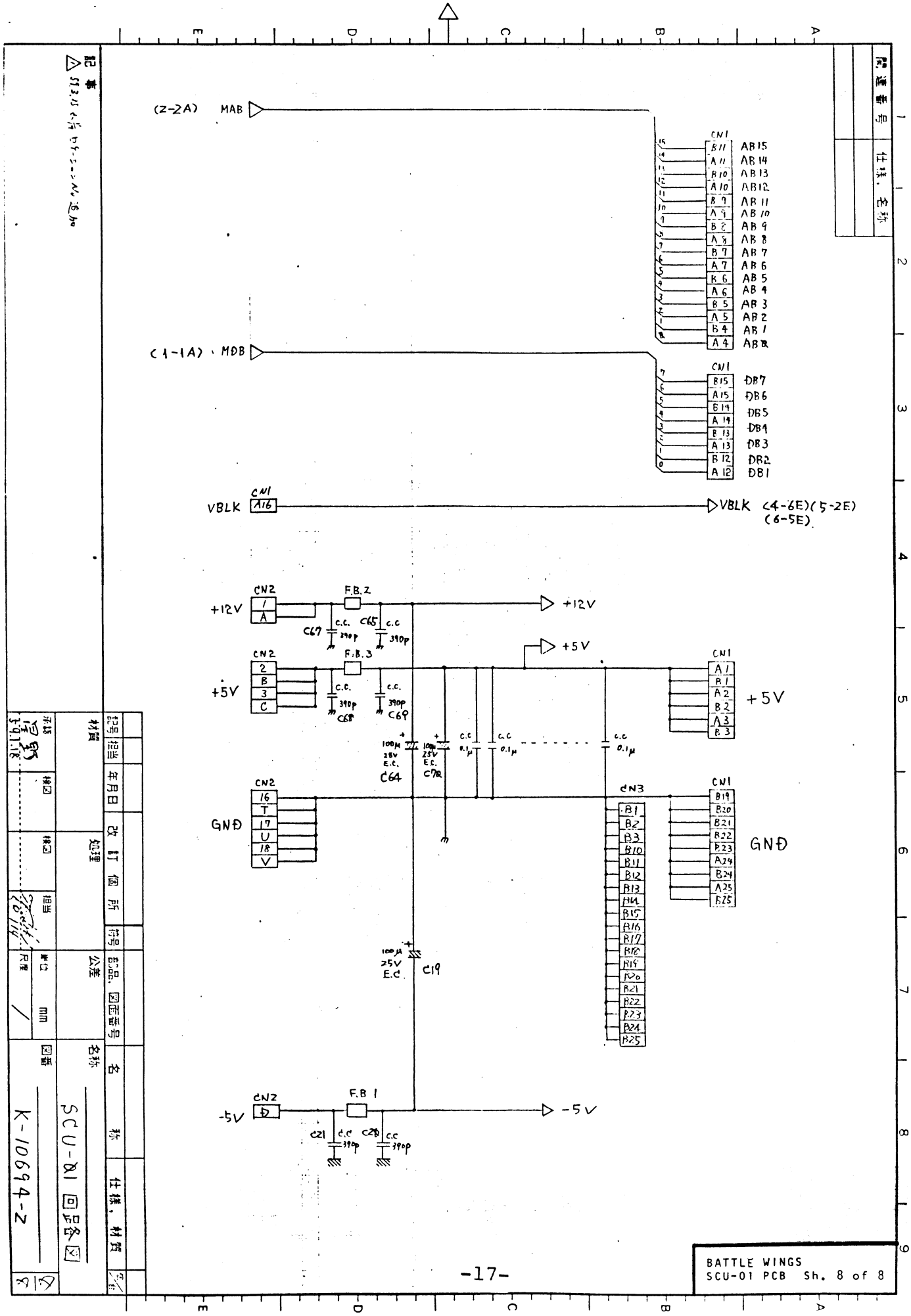
(2-2A) MAB
CN1
AB15
AB14
AB13
AB12
AB11
AB10
AB9
AB8
AB7
AB6
AB5
AB4
AB3
AB2
AB1
ABR
(1-1A) MDB
DB7
DB6
DB5
DB4
DB3
DB2
DB1
VBLK
A16
VBLK (4-6E)(5-2E)
(6-5E)
CN2
+12V
F.B.2
C67
C65
390p
+5V
F.B.3
C68
C69
C64
C70
C19
GND
CN3
-5V
F.B.1
C21
C20
K-10694-Z
SCU-01 回路図
BATTLE WINGS
SCU-01 PCB Sh. 8 of 8

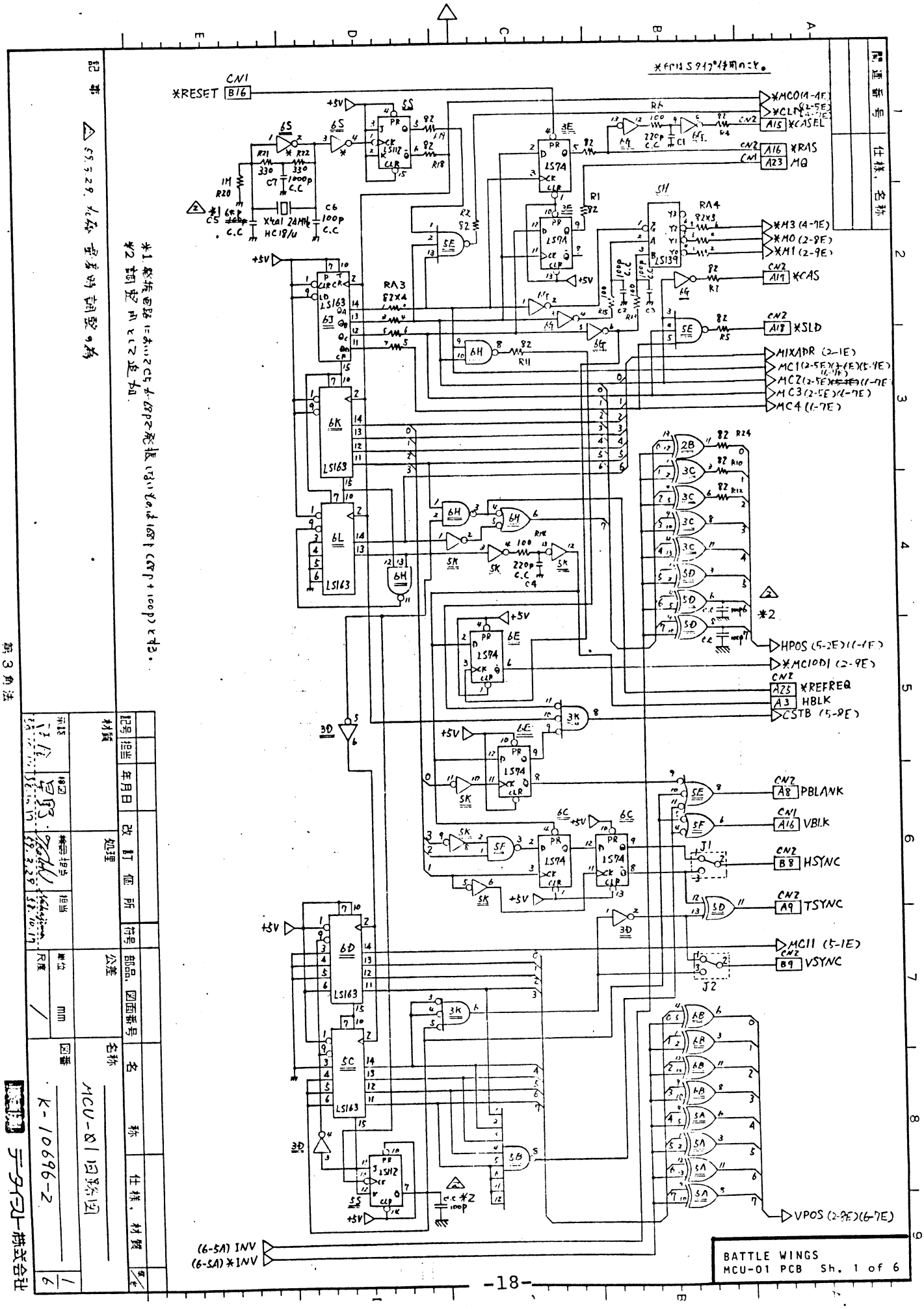
*RESET
CN1 B16
*MC0(1-1E)
*CLP(2-5E)(1-7E)
*CASEL
*RAS
MQ
*M3 (4-7E)
*M0 (2-9E)
*M1 (2-9E)
*CAS
*SLD
MIXADR (2-1E)
MC1(2-5E)(1-7E)(5-7E)
MC2(2-5E)(1-7E)
MC3(2-5E)(1-7E)
MC4 (1-7E)
HPOS (5-2E)(1-1E)
*MC10D1 (2-9E)
*REFREQ
HBLK
CSTB (5-9E)
PBLANK
VBLK
HSYNC
TSYNC
MC11 (5-1E)
VSYNC
VPOS (2-9E)(6-7E)
(6-5A) INV
(6-5A) *INV
BATTLE WINGS
MCU-01 PCB Sh. 1 of 6
MCU-01 回路図
K-10696-2
テーカイスト株式会社

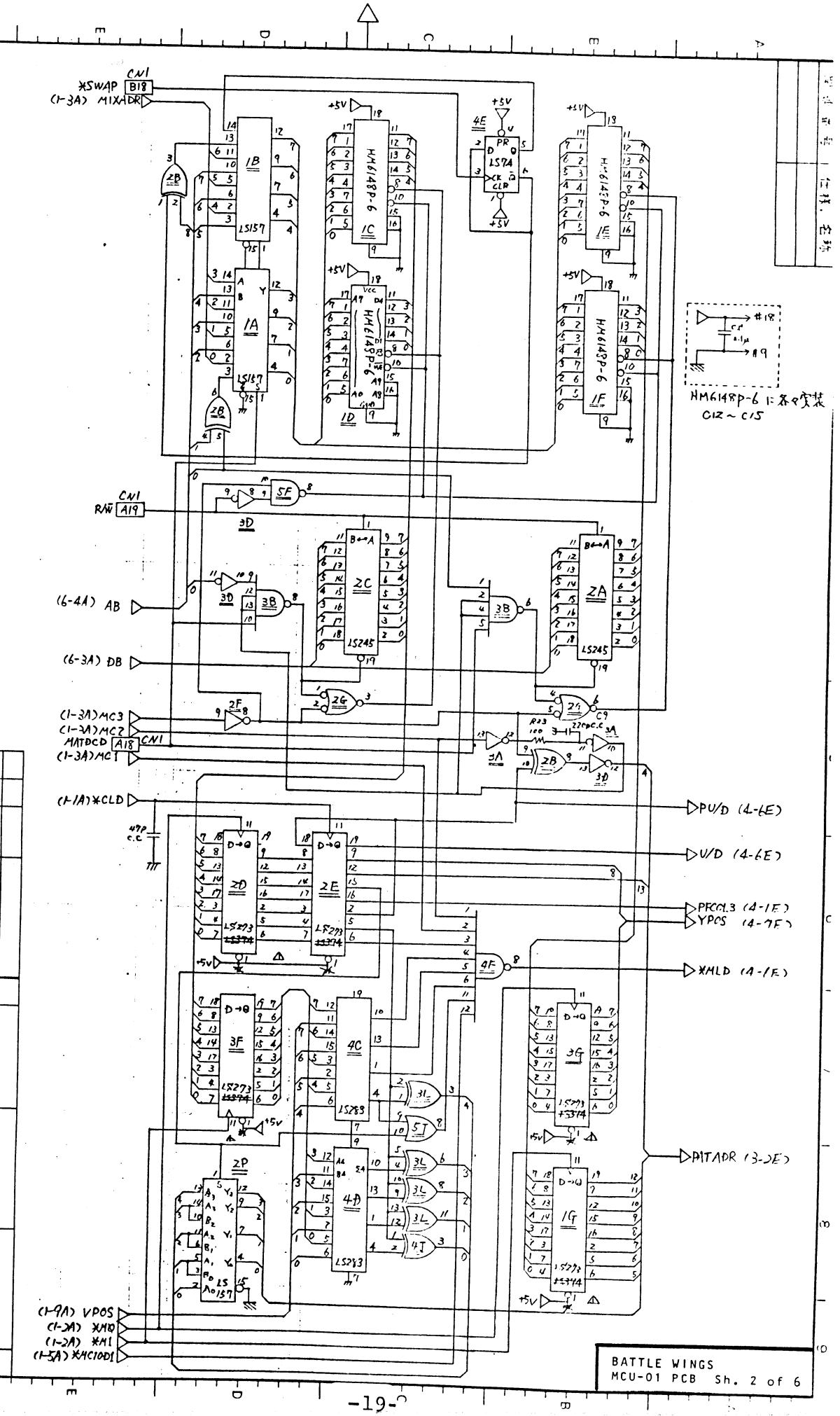
*SWAP
(1-3A) MIXADR
CN1
B18
RAW
A19
(6-4A) AB
(6-3A) DB
(1-3A) MC3
(1-3A) MC2
MATDCD
A18
(1-3A) MC1
(1-1A) *CLD
PU/D (4-6E)
U/D (4-6E)
PFCCL3 (4-1E)
YPOS (4-7E)
*MLD (4-1E)
MITADR (3-2E)
(1-9A) VPOS
(1-2A) *MI0
(1-5A) *MC100D1
HM6148P-6 に各々実装
C12 ~ C15
BATTLE WINGS
MCU-01 PCB Sh. 2 of 6
MCU-01 回路図
K-10696-2
データイースト株式会社

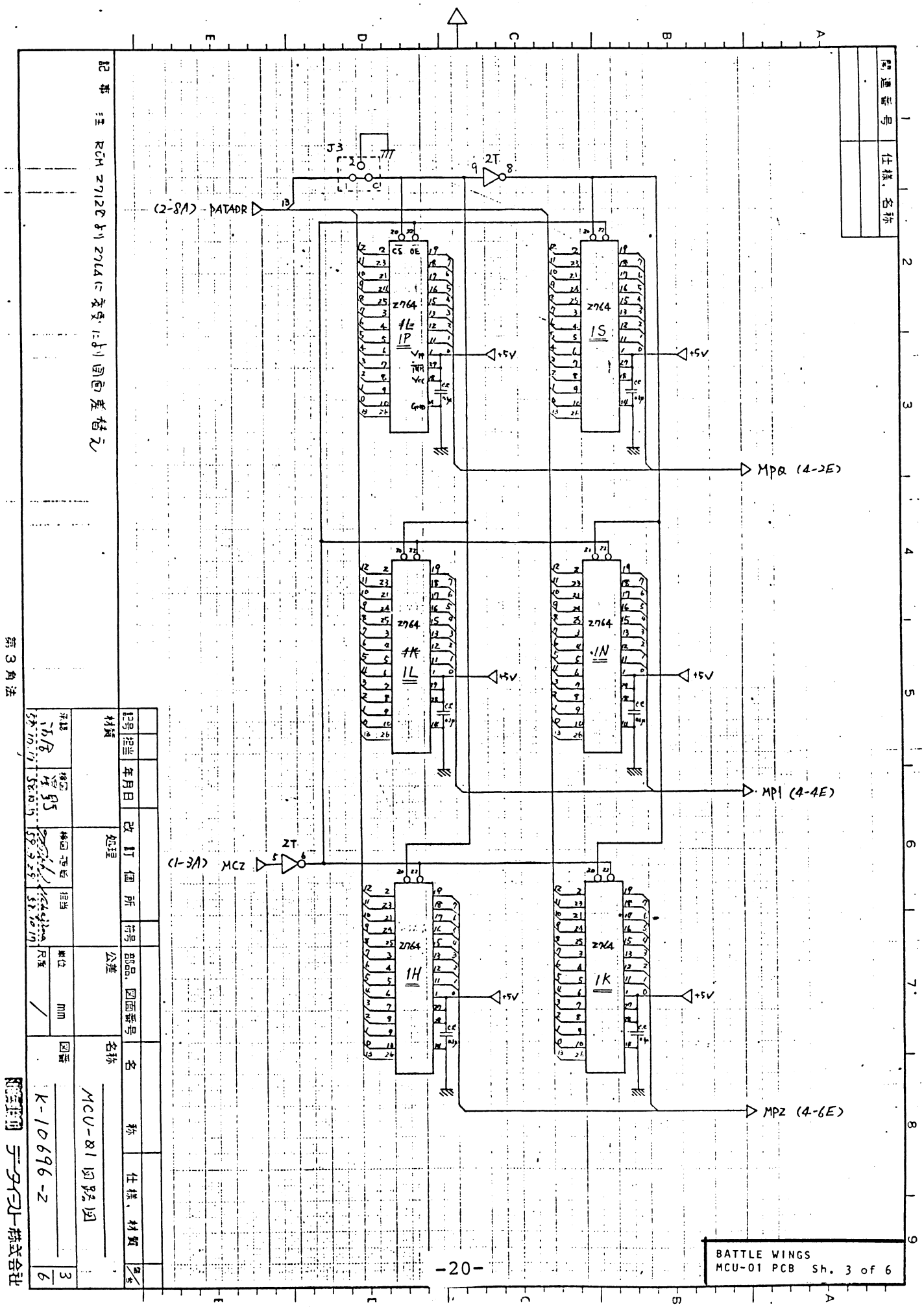
J3
2T
(2-8A) DATADR
2764
1P
1S
1L
1N
1H
1K
CS
OE
+5V
MPQ (4-2E)
MP1 (4-4E)
MP2 (4-6E)
(1-3A) MCZ
2T
記事 注 RCM 27128 より 2764 に変更により回路差替え
材質
処理
公差
名称
MCU-01 図路図
K-10696-Z
テクノ
BATTLE WINGS
MCU-01 PCB Sh. 3 of 6

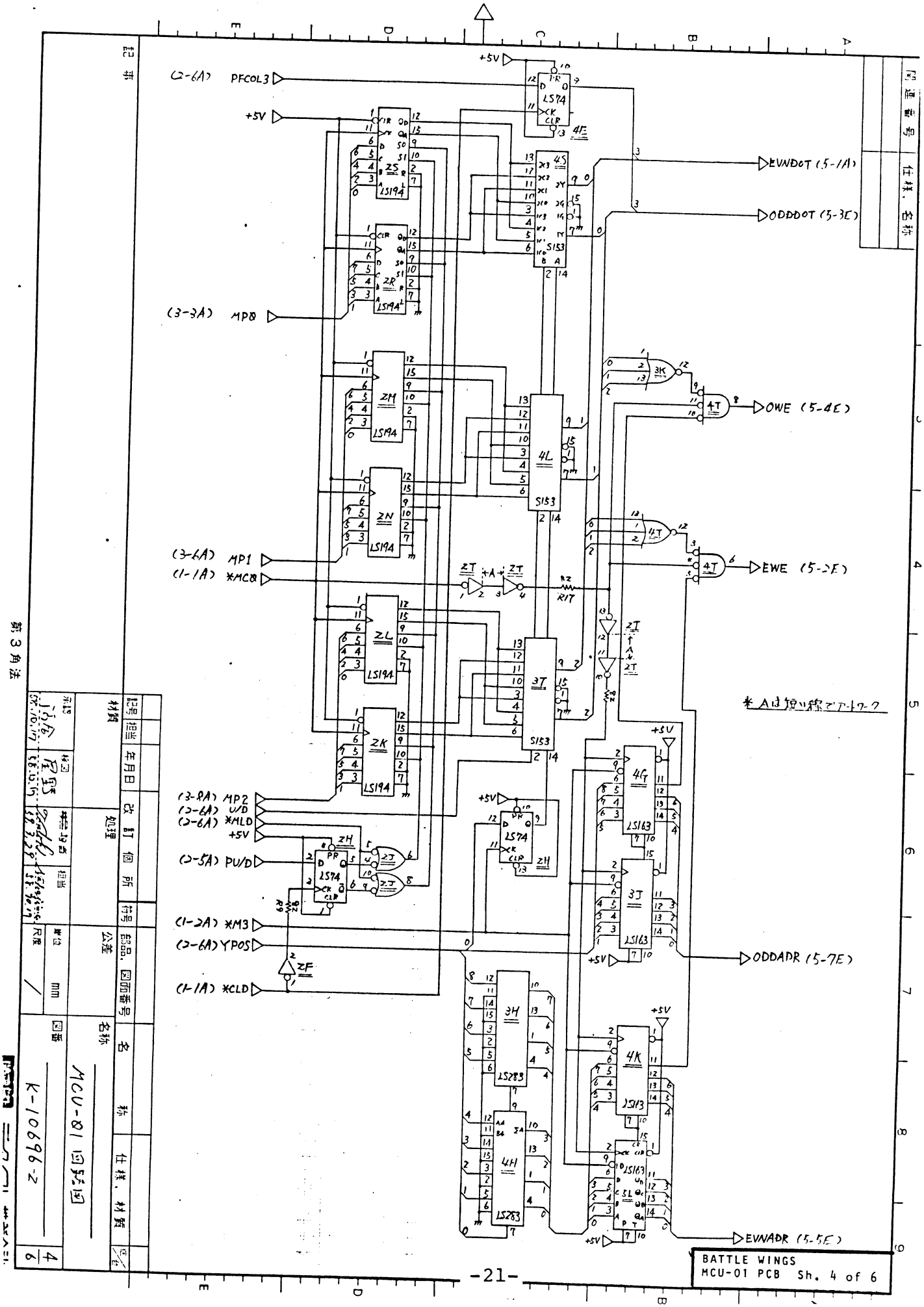
(2-6A) PFCOL3
+5V
(3-3A) MP0
(3-6A) MP1
(1-1A) *MC0
(3-8A) MP2
(2-6A) U/D
(2-6A) *MLD
(2-5A) PU/D
(1-2A) *M3
(2-6A) YPOS
(1-1A) *CLD
EVNDOT (5-1A)
ODDDOT (5-3E)
OWE (5-4E)
EWE (5-2E)
ODDADR (5-7E)
EVNADR (5-5E)
*A は短い線でアドレス
MCU-01 回路図
K-10696-2
BATTLE WINGS
MCU-01 PCB Sh. 4 of 6

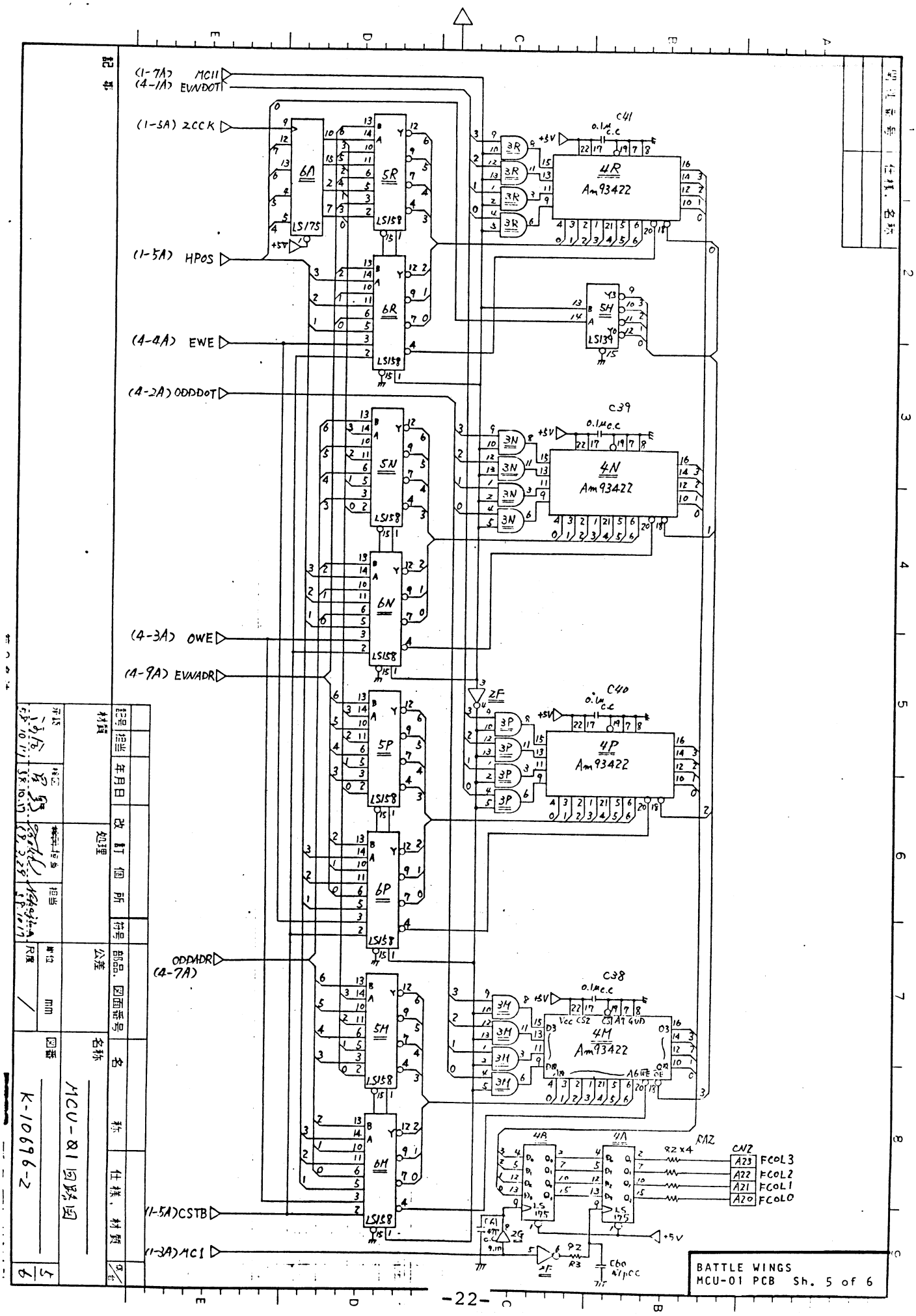
(1-7A) MC11
(4-1A) EVNDOT
(1-5A) 2CCK
(1-5A) HPOS
(4-4A) EWE
(4-2A) ODDDOT
(4-3A) OWE
(4-9A) EVNADR
ODDADR (4-7A)
(1-5A) CSTB
(1-3A) MC1
6A LS175
5R LS158
6R LS158
5N LS158
6N LS158
5P LS158
6P LS158
5M LS158
6M LS158
4R Am93422
4N Am93422
4P Am93422
4M Am93422
5H LS139
C41 0.1μ c.c
C39 0.1μc.c
C40 0.1μ c.c
C38 0.1μc.c
+5V
4B LS175
4A LS175
RA2
CN2
A23 FCOL3
A22 FCOL2
A21 FCOL1
A20 FCOL0
82x4
R3 82
C60 47pcc
MCU-01 回路図
K-10696-2
BATTLE WINGS
MCU-01 PCB Sh. 5 of 6

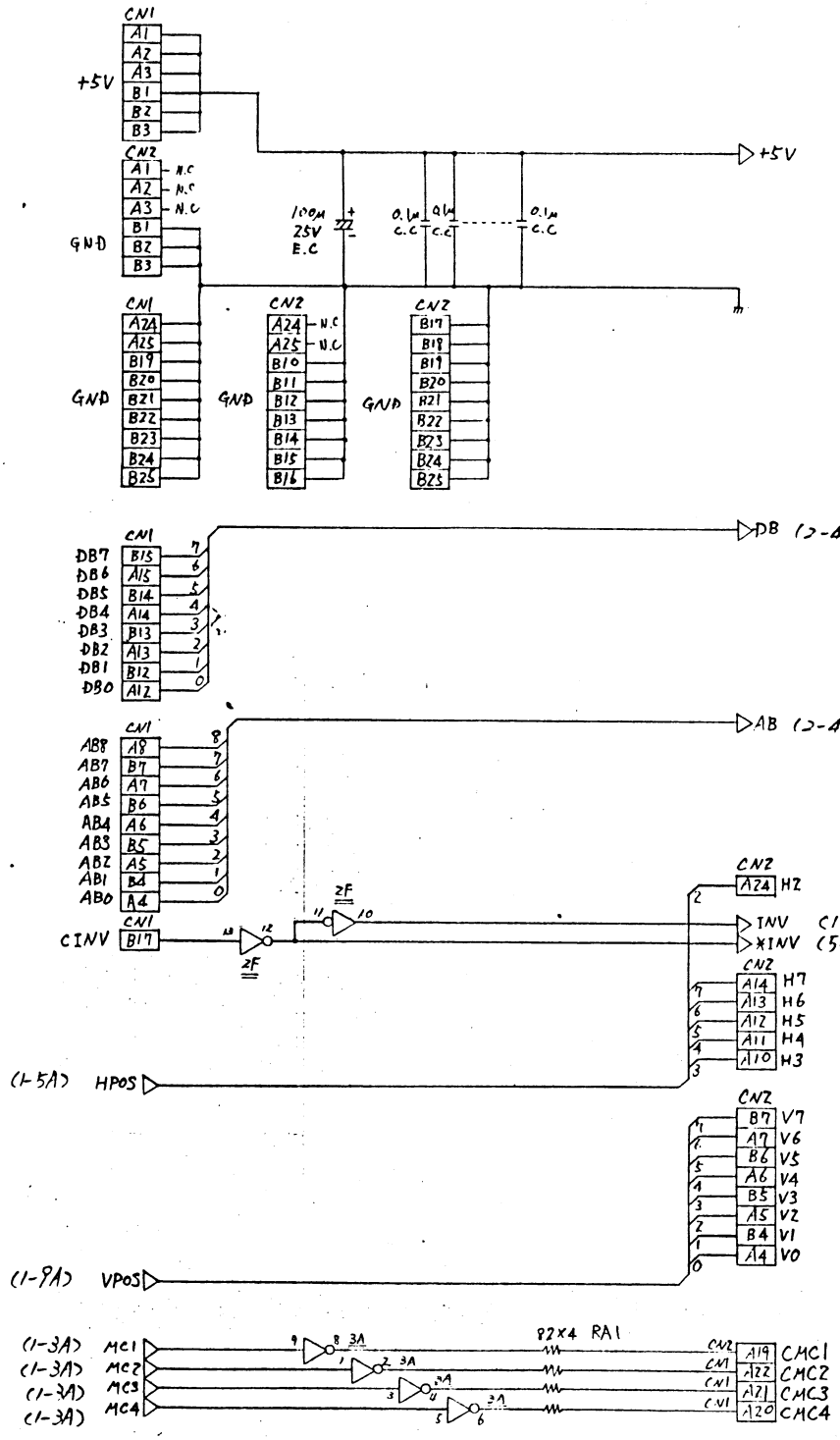

記号	担当	年月日	改訂個所	符号	部品、図面番号	名称	仕様、材質	数量

材質	処理	公差	名称 MCU-01 回路図
単位 mm			図番 K-10696-2
尺度 /			6/6

第3角法

テーダイスト株式会社

BATTLE WINGS
MCU-01 PCB Sh. 6 of 6

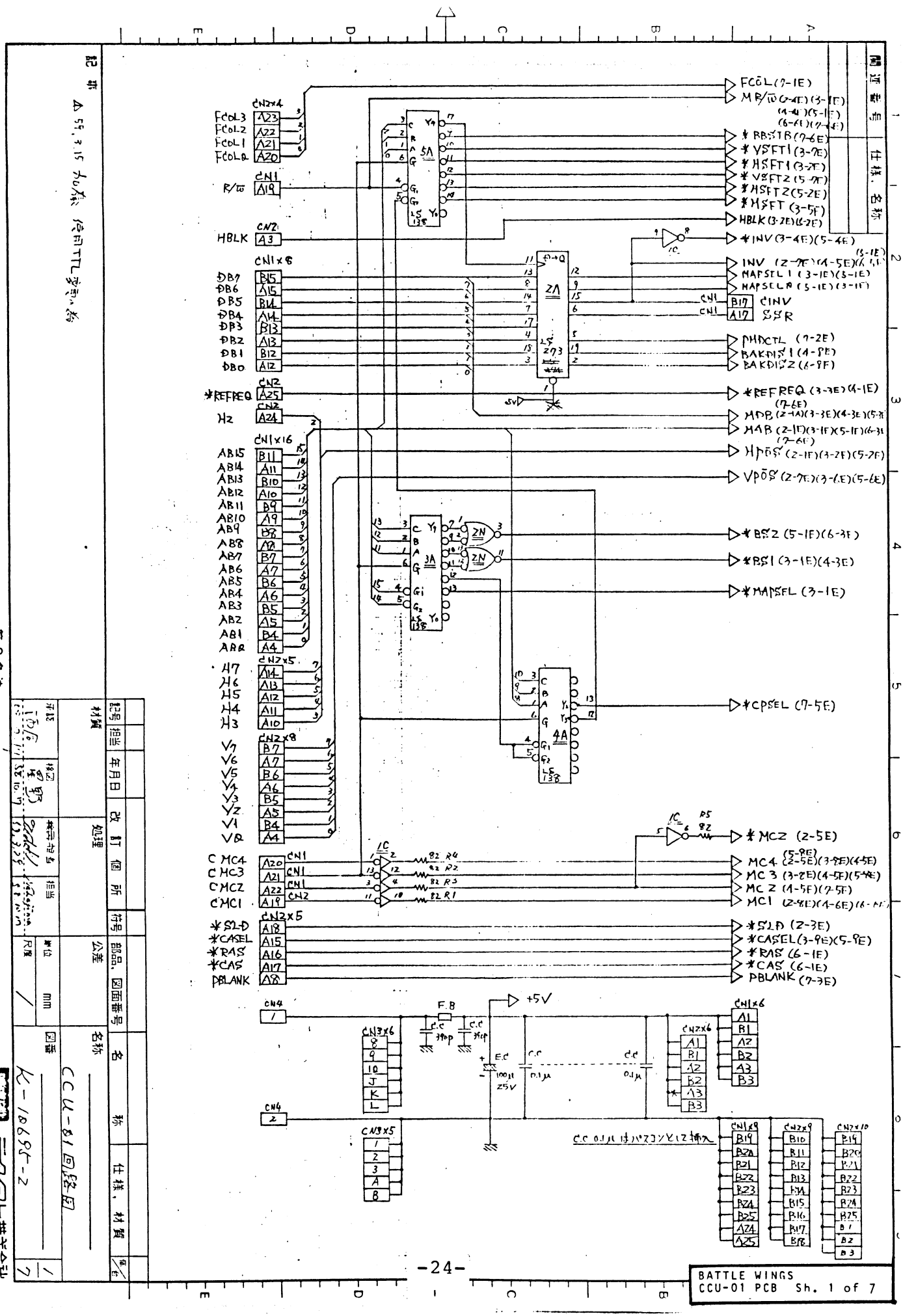
FCOL(7-1E)
MB/W(6-4E)(3-1E)
BBSTB(7-6E)
VSFT1(3-7E)
HSFT1(3-7E)
VSFT2(5-7E)
HSFT2(5-2E)
HSFT(3-5E)
HBLK(3-2E)(6-2E)
INV(3-4E)(5-4E)
MAPSEL1(3-1E)(5-1E)
MAPSEL0(5-1E)(3-1E)
CINV
SYR
PHDCTL(7-2E)
BAKDIS1(4-8E)
BAKDIS2(6-8F)
REFREQ(3-3E)(4-1E)(7-6E)
MDB(2-1A)(3-3E)(4-3E)(5-3E)
MAB(2-1E)(3-1E)(5-1E)(6-3E)(7-6E)
HPOS(2-1E)(3-2E)(5-2E)
VPOS(2-7E)(3-7E)(5-6E)
BSZ(5-1E)(6-3E)
BS1(3-1E)(4-3E)
MASEL(3-1E)
CPSEL(7-5E)
MCZ(2-5E)
MC4(5-9E)(2-5E)(3-9E)(4-5E)
MC3(3-9E)(4-5E)(5-9E)
MCZ(4-5E)(7-5E)
MC1(2-9E)(4-6E)(6-9E)
S2D(2-3E)
CASEL(3-9E)(5-9E)
RAS(6-1E)
CAS(6-1E)
PBLANK(7-3E)
+5V
CCU-81回路図
K-10695-2
BATTLE WINGS
CCU-01 PCB Sh. 1 of 7

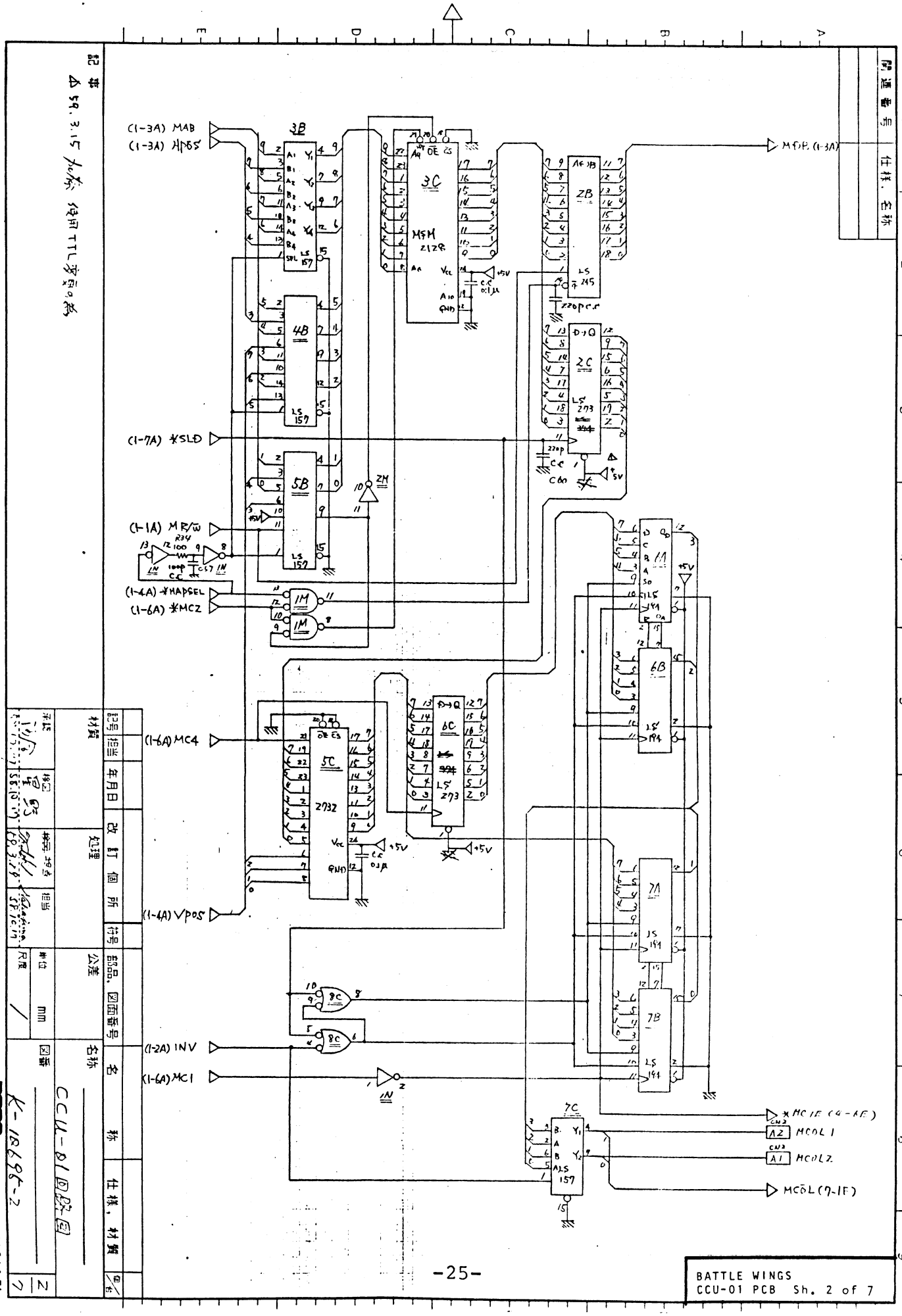

BATTLE WINGS
CCU-01 PCB Sh. 2 of 7

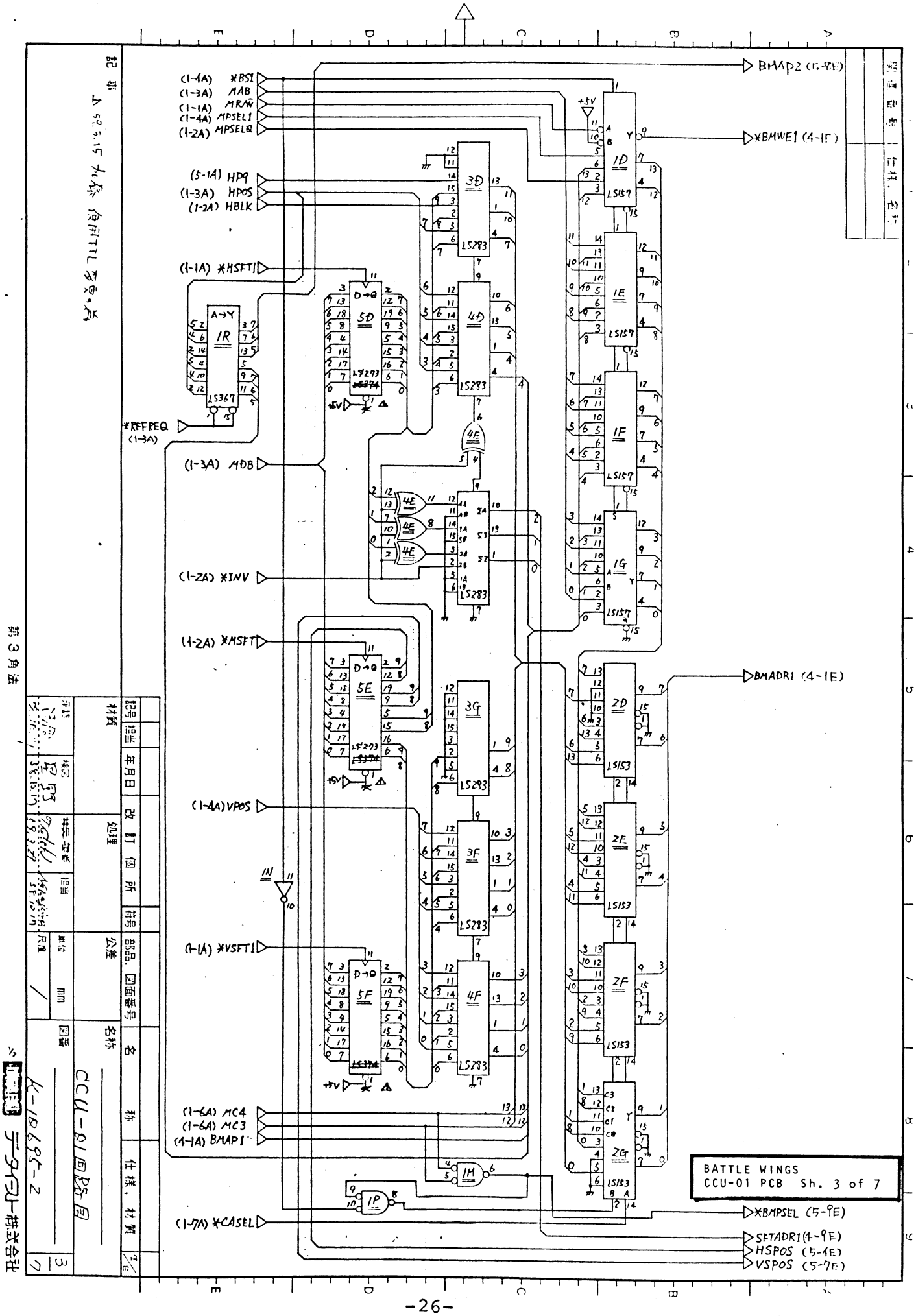
BATTLE WINGS
CCU-01 PCB Sh. 3 of 7
CCU-01回路図
K-18695-2
データイースト株式会社
(1-4A) *BSI
(1-3A) MAB
(1-1A) MRW
(1-4A) MPSEL1
(1-2A) MPSEL2
(5-1A) HP9
(1-3A) HPOS
(1-2A) HBLK
(1-1A) *HSFT1
*REFREQ (1-3A)
(1-3A) MDB
(1-2A) *INV
(1-2A) *MSFT
(1-4A) VPOS
(1-1A) *VSFT1
(1-6A) MC4
(1-6A) MC3
(4-1A) BMAP1
(1-7A) *CASEL
BMAP2 (5-9E)
*BMWE1 (4-1F)
BMADR1 (4-1E)
*BMPSEL (5-9E)
SFTADR1 (4-9E)
HSPOS (5-4E)
VSPOS (5-7E)

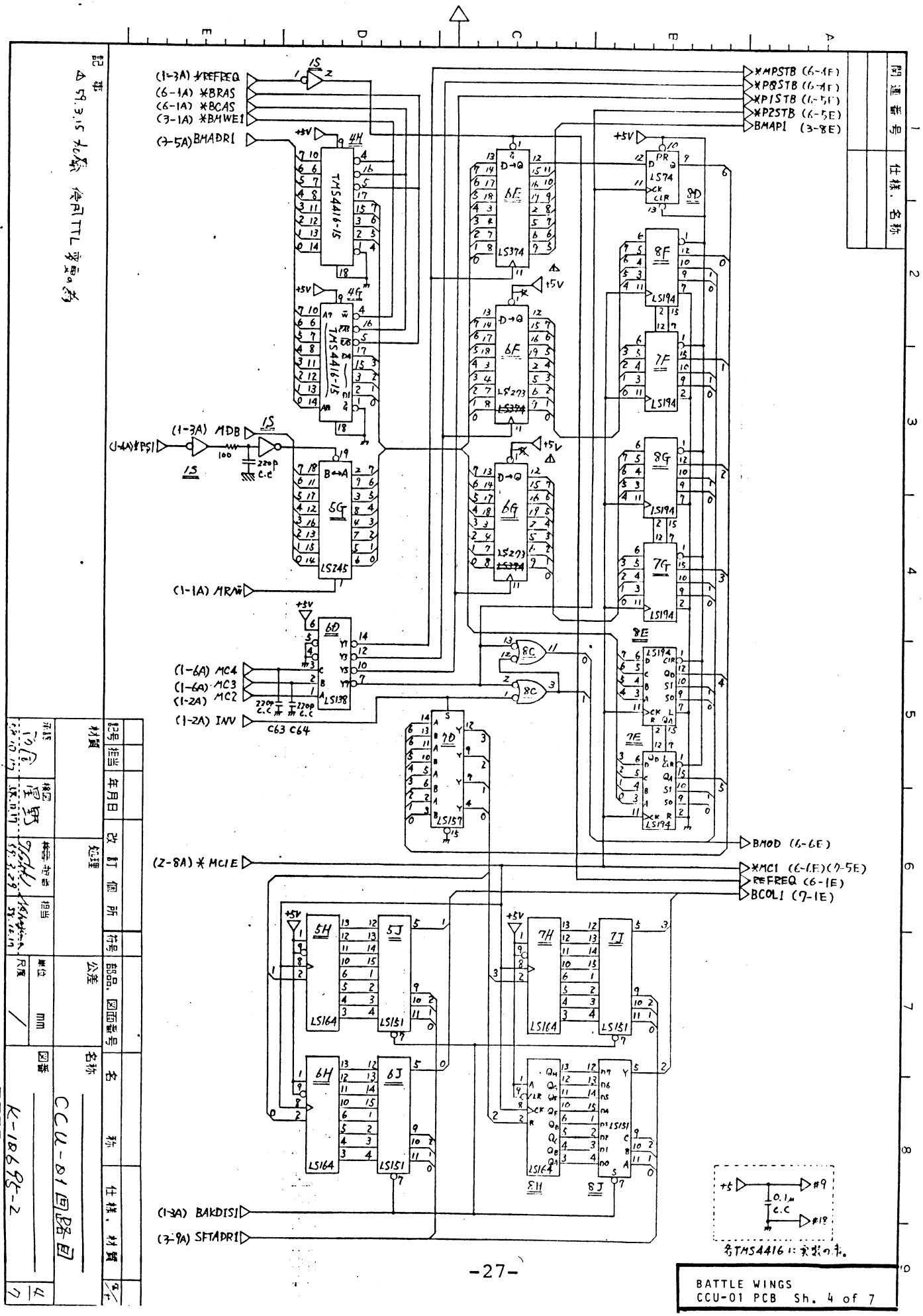
(1-3A) *REFREQ
(6-1A) *BRAS
(6-1A) *BCAS
(3-1A) *BMWE1
(7-5A) BMADR1
(1-3A) MDB
(1-4A) *PS1
(1-1A) MRW
(1-6A) MC4
(1-6A) MC3
(1-2A) MC2
(1-2A) INV
(2-8A) *MC1E
(1-3A) BAKDIS1
(7-9A) SFTADR1
*MPSTB (6-1F)
*P0STB (6-1F)
*P1STB (6-5F)
*P2STB (6-5E)
BMAPI (3-8E)
BMOD (6-6E)
*MC1 (6-1E)(7-5E)
REFREQ (6-1E)
BCOL1 (7-1E)
TMS4416-15
LS374
LS273
LS245
LS138
LS157
LS194
LS374
LS164
LS151
C63 C64
+5V
BATTLE WINGS
CCU-01 PCB Sh. 4 of 7

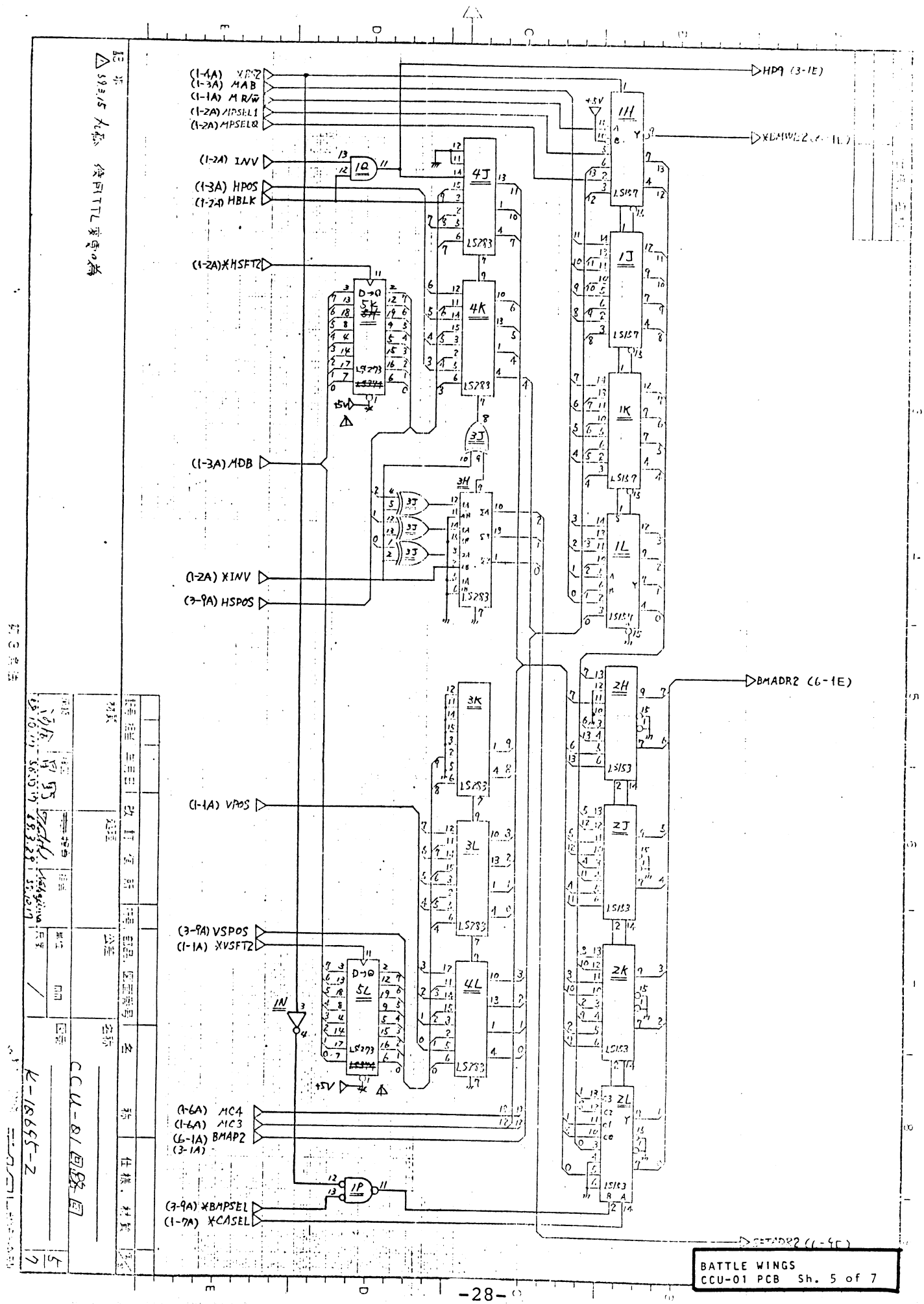

BATTLE WINGS
CCU-01 PCB Sh. 5 of 7

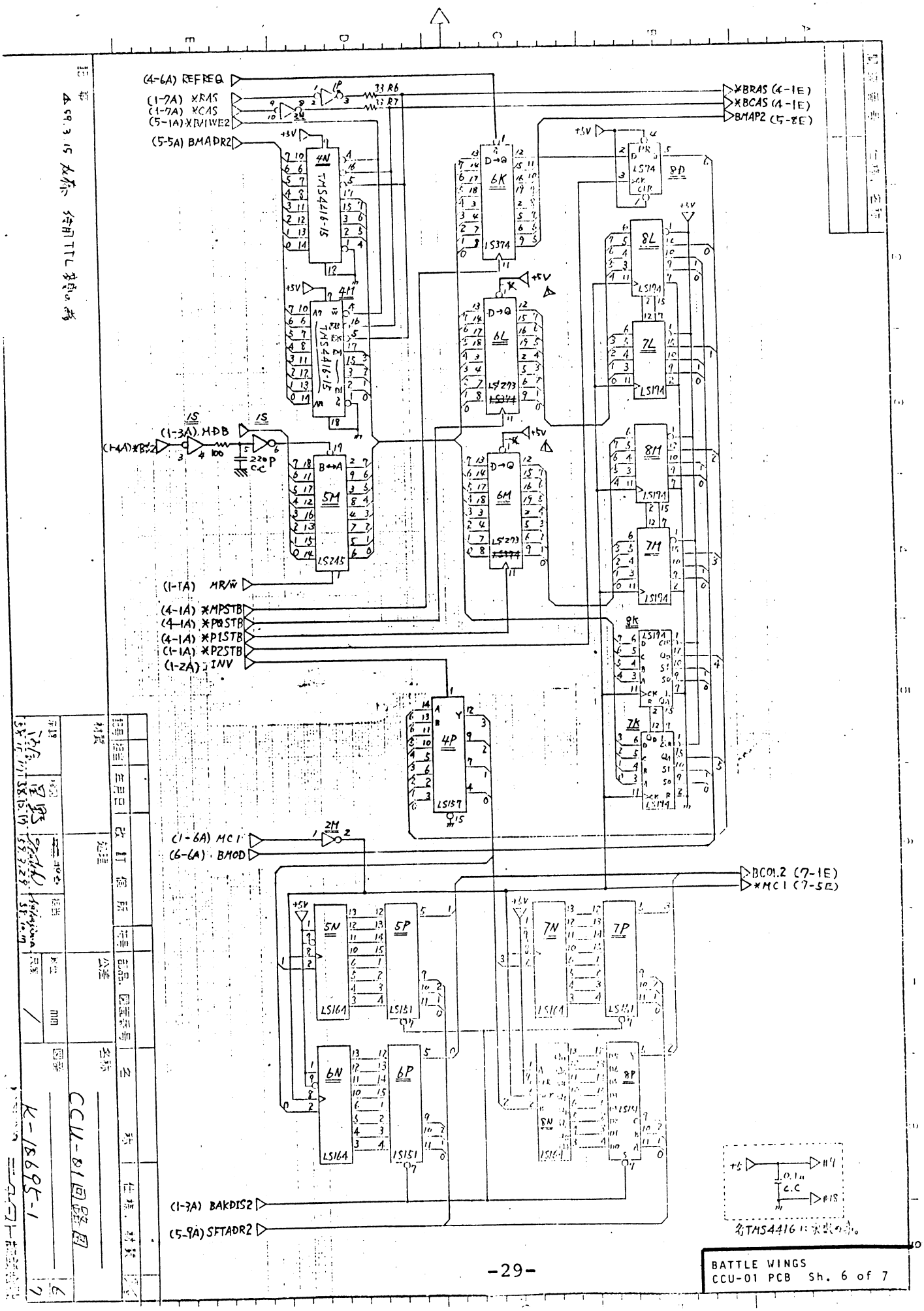
(4-6A) REFREQ
(1-7A) *RAS
(1-7A) *CAS
(5-1A) *BMWE2
(5-5A) BMADR2
33 R6
33 R7
*BRAS (4-1E)
*BCAS (4-1E)
BMAP2 (5-8E)
4N
TMS4416-15
4M
TMS4416-15
6K
D→Q
LS374
8D
LS74
8L
LS194
7L
LS194
6L
LS273
6M
LS273
8M
LS194
7M
LS194
(1-3A) MDB
(1-4A) *BS2
100
220P
5M
B↔A
LS245
(1-1A) MR/W
(4-1A) *MPSTB
(4-1A) *P0STB
(4-1A) *P1STB
(1-1A) *P2STB
(1-2A) INV
8K
LS194
7K
LS194
4P
LS157
(1-6A) MC1
(6-6A) BMOD
2M
BCOL2 (7-1E)
*MC1 (7-5E)
5N
LS164
5P
LS151
7N
LS164
7P
LS151
6N
LS164
6P
LS151
8N
LS164
8P
LS151
(1-3A) BAKDIS2
(5-9A) SFTADR2
+5V
0.1μ
C.C
*TMS4416に変更のこと。
BATTLE WINGS
CCU-01 PCB Sh. 6 of 7
CCU-01 回路図
K-18695-1

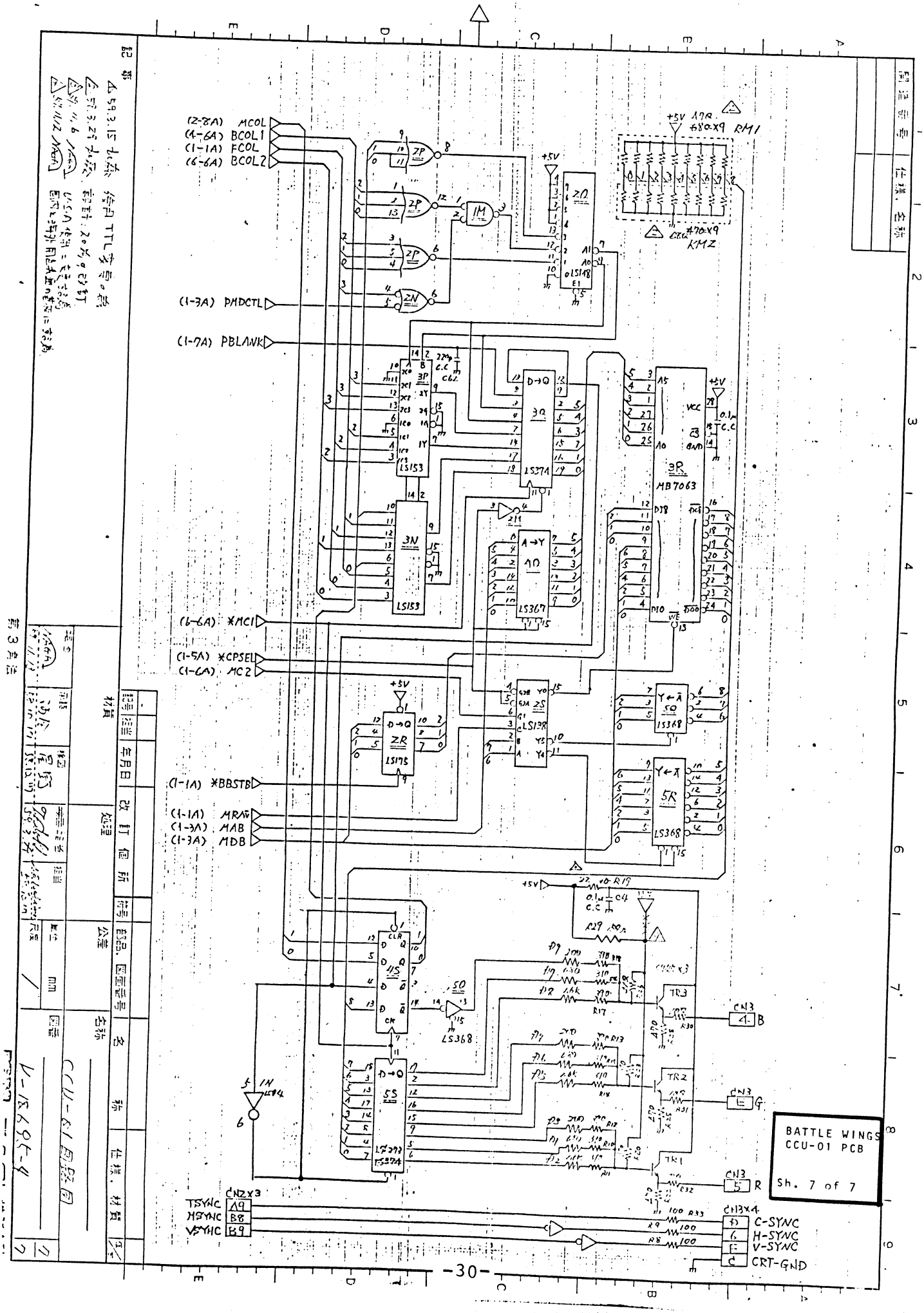
(2-8A) MCOL
(4-6A) BCOL1
(1-1A) FCOL
(6-6A) BCOL2
(1-3A) PMDCTL
(1-7A) PBLANK
(6-6A) *MC1
(1-5A) *CPSEL
(1-6A) MC2
(1-1A) *BBSTB
(1-1A) MRAW
(1-3A) MAB
(1-3A) MDB
+5V 470×9 RM1
470×9 RM2
LS148
LS153
LS37A
LS367
MB7063
LS138
LS175
LS368
LS374
CN2×3
TSYNC
HSYNC
VSYNC
CN3×4
C-SYNC
H-SYNC
V-SYNC
CRT-GND
BATTLE WINGS
CCU-01 PCB
Sh. 7 of 7